LINEAR MOTORS P01 / P02



LinMot P01 and P02 linear motors are linear direct drives for highly dynamic motions and a wide range of applications.

Product Description

The P01 and P02 linear motors are linear direct drives with standard, short, and high-performance versions. Users can choose from a total of 7 sizes with a closely spaced range of sliders. This results in a large number of stroke and force ranges for any positioning task.

Typical applications include rapid positioning, lifting, and sliding motions, synchronous pick-and-place applications, and complete gantry-style palletizing robots.



Standard Motors P01 / P02

The standard variant of the linear motor covers a wide range of applications. The compact drives are used to perform a many different positioning tasks in the low-voltage range. The stators are available with a rotating IP67 angle plug or a cable outlet. This makes them easy to install, even under difficult space constraints.



HP Motors P01

In comparison with standard motors, high-performance linear motors have substantially higher power output for the same form factor and identical dimensions. This is produced by advancements in the motor windings and in the magnetic circuit, and by the use of high-performance materials. The user can access nearly double the rated power.



Short Type Motors P01 / P02

This type of motor is the shortest form factor among LinMot linear motors. Short motors were developed specially for applications with limited available space. In order to provide designers with as much flexibility as possible for cable routing, these motors are shipped with three covers (cable output on the left, right, or front).

Characteristics

FREELY POSITIONABLE

LinMot linear motors can be freely positioned. With absolute or relative movement commands, they can move to any desired position in the stroke range. Since the LinMot linear drive is a closed-loop system, not only the end positions are monitored, but also deviations in position during travel. This allows, among other things, precise specification of travel speeds, acceleration and braking ramps, and travel through curved paths.

HIGH AND CONTROLLED DYNAMICS

Max. acceleration values over 500 m/s^2 and travel speeds over 5 m/s allow cyclical motion sequences of several Hertz

For handling applications with sensitive products, such as transporting wafers in semiconductor production, very gentle, smooth motions with suitable accelerations can be obtained.

PROCESS STABILITY

Since not only the end positions, but also speed and acceleration are controlled and monitored, motions that are programmed once are carried out the same way over the entire life of the machine.

SYNCHRONIZATION

For synchronous machines, the linear motor can be synchronized to the main shaft. By replacing mechanical cam discs with LinMot linear motors, for example, great variations can be achieved, with format changeovers at the push of a button.

OVERLOAD PROTECTION

There are no mechanical components for force transfer that could be damaged in a crash or stall condition in a linear motor. Complex, expensive designs to protect gearboxes, gears, and shafts are thus eliminated. If the linear motor stalls, it acts like a pneumatic cylinder and tries to reach the target position with maximum force. The following error monitor in the drive can, however, immediately recognize a stall condition. Temperature sensors integrated in the stator prevent the drive from overloading in any case.

LONG LIFESPAN

Since the linear motion is generated purely magnetically, and no mechanical force transmission takes place, even extremely dynamic applications can be implemented with a long lifespan.

SIMPLE INSTALLATION

The connection between the motor and the Servo Drive requires only a single cable. Since all motors have a Connector either directly on the motor or at the end of the motor cable, installation is as simple as you might think. Motor cables are available from stock in various lengths, in different versions. The standard cable is suitable for stationary applications. For applications with moving stators, high-flex motor cables are available for use with cable tracks, and robotic cables are available for applications with cable torsion.

Type Code Linear Motors

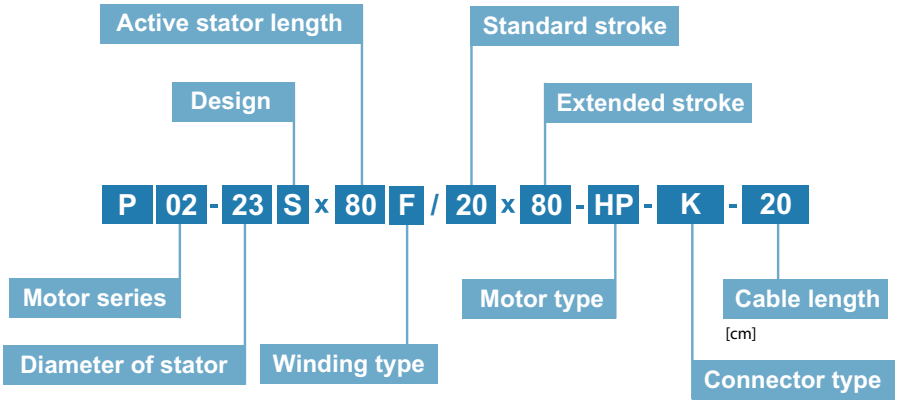

For explanations of the terms, please refer to the section "Glossary"

Sample applications

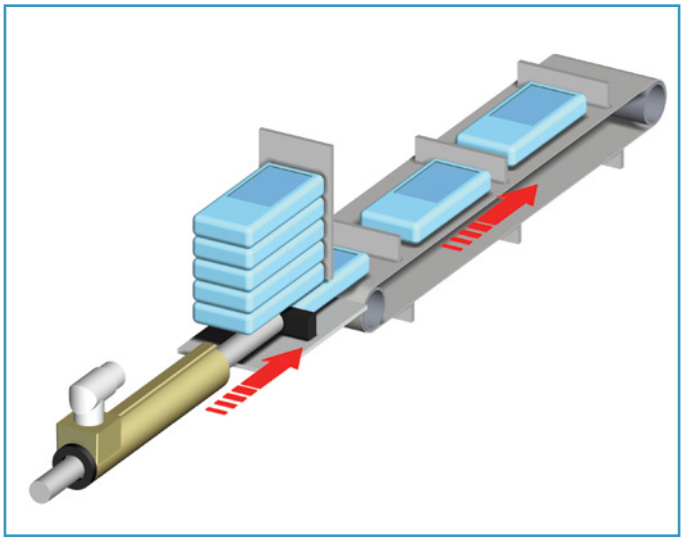

Feeding

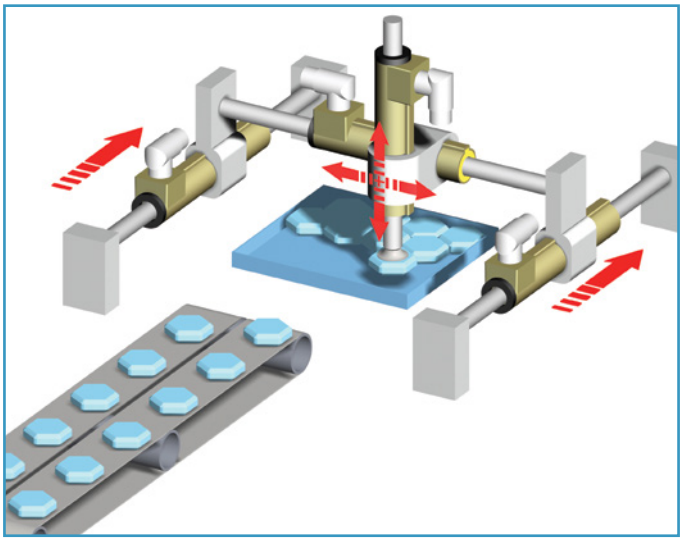

Pick and Place

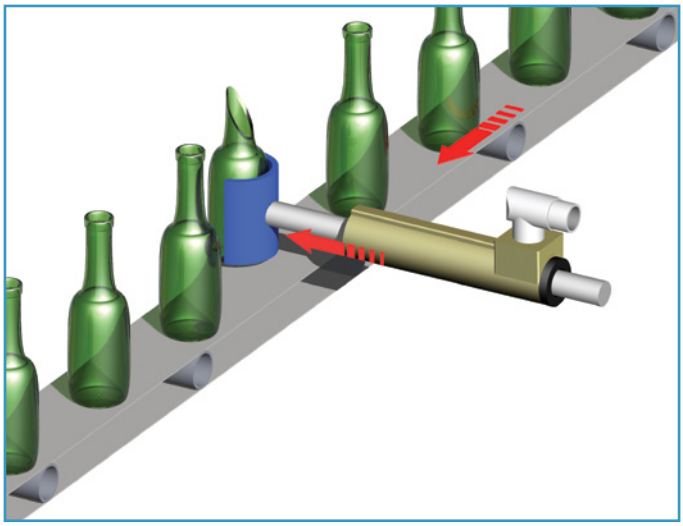

Sorting

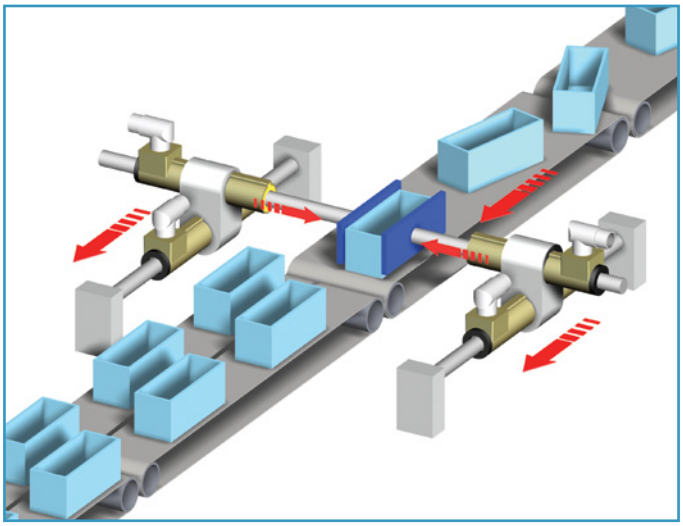

Alignment

LINEAR MOTORS P01-23x80



- Highly dynamic drives
- Wide stroke range
- Available with cable outlet or with rotatable connector
- Optional with air cooling
- Wide range of applications in handling modules as well as in plant and machine construction

LINEAR MOTORS P01-23x80

Technical Data ____ **29**

Motor Specifications

P01-23x80/0x60-LC ____ **32**

P01-23x80/40x100-LC ____ **33**

P01-23x80/60x120-LC ____ **34**

P01-23x80/100x160-LC ____ **35**

P01-23x80/160x220-LC ____ **36**

P01-23x80/220x280-LC ____ **37**

P01-23x80/290x350-LC ____ **38**

P01-23x80/350x410-LC ____ **39**

P01-23x80/450x510-LC ____ **40**

P01-23x80/630x690-LC ____ **41**

P01-23x80/720x780-LC ____ **42**

Linear Guides ____ **43**

Accessories ____ **44**



MOTOR FAMILY P01-23x80

Technical Data				
Stroke				
Standard Stroke (SS)	mm	(in)	≤ 720	(≤ 28.3)
Extended Stroke (ES)	mm	(in)	≤ 780	(≤ 30.69)
Force				
Max. Force @ 48VDC	N	(lbf)	41.6	(9.35)
Max. Force @ 72VDC	N	(lbf)	44	(9.89)
Max. Cont. Force [Passive cooling/ Fan / Fluid]	N	(lbf)	8.6 / 16 / -	(1.9 / 3.5 / -)
Max. Border Force relative	%		≤ 63	
Force Constant	N/A_{pk}	(lbf/A_{pk})	11	(2.47)
Velocity				
Max. Velocity @ 48VDC	m/s	(in/s)	3.9	(159.9)
Max. Velocity @ 72VDC	m/s	(in/s)	5.9	(239.9)
Position Detection				
Position Resolution	mm	(in)	0.002	(0.0001)
Repeatability	mm	(in)	±0.05	(±0.002)
Position Resolution with ES	mm	(in)	0.001	(0.00004)
Repeatability with ES	mm	(in)	±0.01	(±0.0004)
Linearity with ES	mm	(in)	±0.01	(±0.0004)
Electrical Data				
Max. Current @ 48VDC	A_{pk}		3.7	
Max. Current @ 72VDC	A_{pk}		3.9	
Max. Cont. Current [Passive cooling /Fan / Fluid]	A_{pk}		0.78 / 1.4 / -	
Terminal Resistance 25 °C / 120 °C	Ohm		10 / 14	
Terminal Inductivity	mH		1.4	
Magnetic Period	mm	(in)	20	(0.78)
Thermal Data				
Max. Winding Temperature (Sensor)	°C		90	
Thermal Resistance [Passive cooling / Fan / Fluid]	°K/W		6.4 / 1.9 / -	
Thermal Time Constant [Passive cooling / Fan / Fluid]	s		770 / 230 / -	
Mechanical Data				
Stator Diameter	mm	(in)	23	(0.91)
Stator Length [Connector type / Cable type]	mm	(in)	162 / 177	(6.4 / 7)
Stator Mass	g	(lb)	265	(0.58)
Slider Diameter	mm	(in)	12	(0.47)
Slider Length	mm	(in)	130 - 850	(5.1 - 33)
Slider Mass	g	(lb)	90 - 700	(0.20 - 1.5)
IP Code			IP 65	

STATOR CONNECTOR TYPE

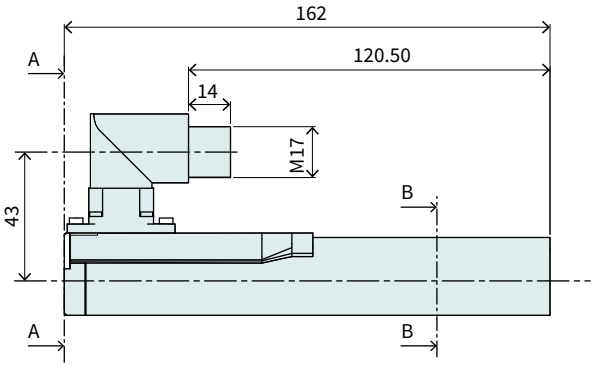

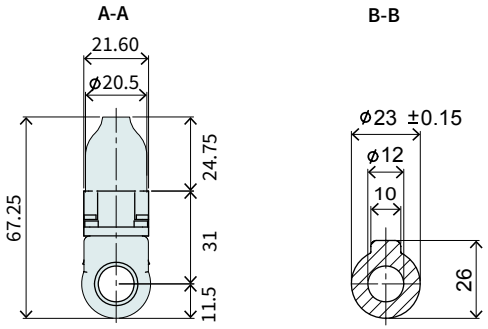

Item	Description	Item-No.
PS01-23x80-R	Stator with IP67 Connector M17/9(m)	0150-1233

STATOR CABLE TYPE

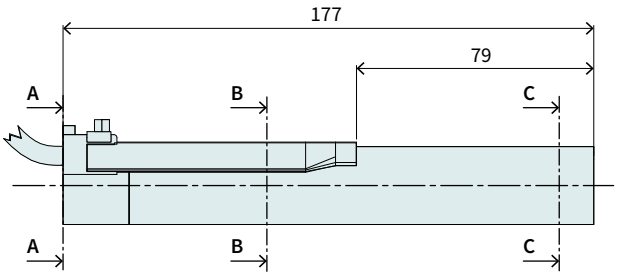

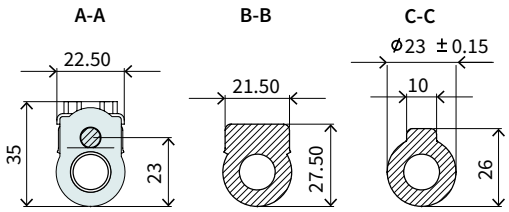

Item	Description	Item-No.
PS01-23x80-R20	Stator, 0.2 m cable, IP67 con. M17/9(m)	0150-1241
PS01-23x80	Stator, cable 1 m, Connector D-Sub-9(m)	0150-1201

CONNECTOR

Motor Connector Wiring	PS01-23x80-R PS01-23x80-R20	PS01-23x80	Wire color motor cable
	R-Connector	D-Connector	
Ph 1+	1	1	red
Ph 1-	2	6	pink
Ph 2+	3	2	blue
Ph 2-	4	7	grey
+5VDC	A	3	white
GND	B	8	inner shield
Sin	C	4	yellow
Cos	D	9	green
Temp.	E	5	black
Shield	Housing	Housing	outer Shield

R-Connector

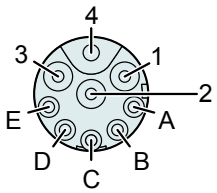

D-Connector

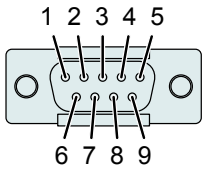

View: Motor Connector, plug side

SLIDER

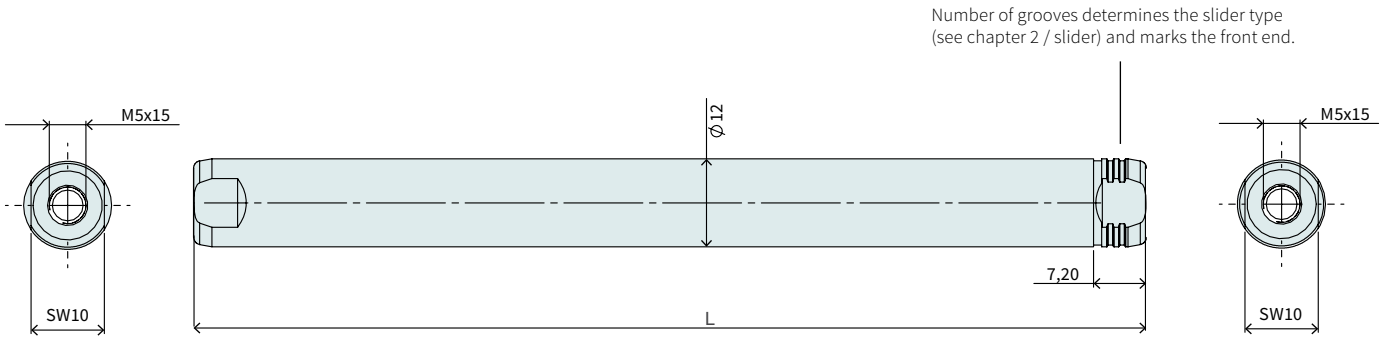

Slider Standard				
Item	Description	Max. Stroke [mm]	Standard Stroke [mm]	Item-No.
PL01-12x130/90-LC	Slider 'standard LC'	60	0	0150-2580
PL01-12x170/130-LC	Slider 'standard LC'	100	40	0150-2581
PL01-12x190/150-LC	Slider 'standard LC'	120	60	0150-2582
PL01-12x230/190-LC	Slider 'standard LC'	160	100	0150-2598
PL01-12x290/250-LC	Slider 'standard LC'	220	160	0150-2583
PL01-12x350/310-LC	Slider 'standard LC'	280	220	0150-2584
PL01-12x420/380-LC	Slider 'standard LC'	350	290	0150-2585
PL01-12x480/440-LC	Slider 'standard LC'	410	350	0150-2586
PL01-12x580/540-LC	Slider 'standard LC'	510	450	0150-2587
PL01-12x760/720-LC	Slider 'standard LC'	690	630	0150-2589
PL01-12x850/810-LC	Slider 'standard LC'	780	720	0150-2588

Slider Heavy Duty				
Item	Description	Max. Stroke [mm]	Standard Stroke [mm]	Item-No.
PL02-12x130/90-LC	Slider 'heavy duty LC'	60	0	0150-2590
PL02-12x170/130-LC	Slider 'heavy duty LC'	100	40	0150-2591
PL02-12x190/150-LC	Slider 'heavy duty LC'	120	60	0150-2592
PL02-12x230/190-LC	Slider 'heavy duty LC'	160	100	0150-2599
PL02-12x290/250-LC	Slider 'heavy duty LC'	220	160	0150-2593
PL02-12x350/310-LC	Slider 'heavy duty LC'	280	220	0150-2594
PL02-12x420/380-LC	Slider 'heavy duty LC'	350	290	0150-2595
PL02-12x480/440-LC	Slider 'heavy duty LC'	410	350	0150-2597
PL02-12x580/540-LC	Slider 'heavy duty LC'	510	450	0150-2596
PL02-12x760/720-LC	Slider 'heavy duty LC'	690	630	on request
PL02-12x850/810-LC	Slider 'heavy duty LC'	780	720	on request

P01-23x80/0x60-LC

Max. Stroke: 60 mm
Peak Force: 44 N

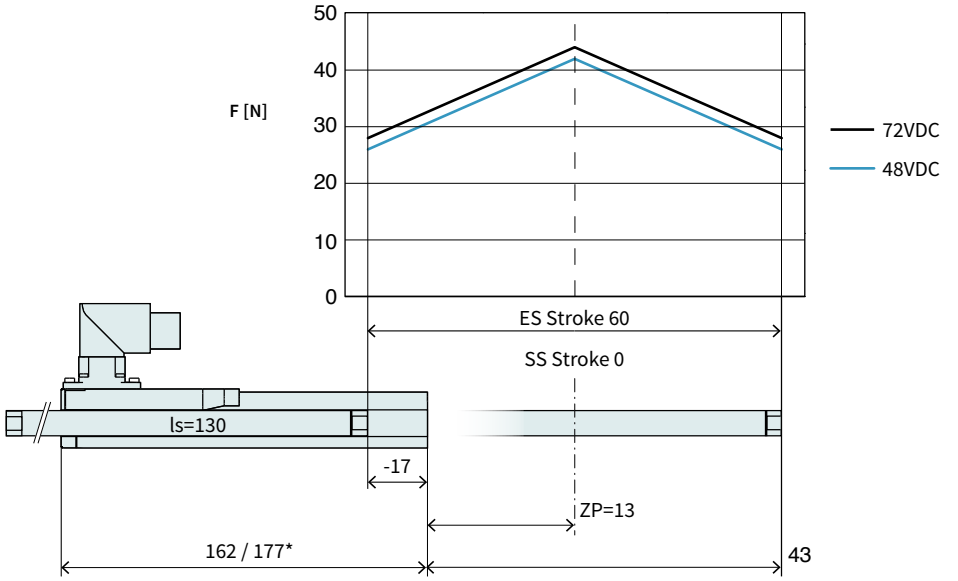

Dimensions in mm
*Cable Type

Technical Data P01-23x80/0x60-LC				
Stroke				
Standard Stroke (SS)	mm	(in)	0	(0)
Extended Stroke (ES)	mm	(in)	60	(2.35)
Force				
Max. Force @ 48VDC	N	(lbf)	41.6	(9.35)
Max. Force @ 72VDC	N	(lbf)	44	(9.89)
Max. Cont. Force [Passive cooling/ Fan / Fluid]	N	(lbf)	8.6 / 16 / -	(1.9 / 3.5 / -)
Max. Border Force relative	%		63	
Force Constant	N/A_{pk}	(lbf/A_{pk})	11	(2.47)
Velocity				
Max. Velocity @ 48VDC	m/s	(in/s)	3.9	(159.9)
Max. Velocity @ 72VDC	m/s	(in/s)	5.9	(239.9)
Position Detection				
Repeatability	mm	(in)	±0.05	(±0.002)
Linearity	%		± 0.5	
Electrical Data				
Max. Current @ 48VDC	A_{pk}		3.7	
Max. Current @ 72VDC	A_{pk}		3.9	
Max. Cont. Current [Passive cooling /Fan / Fluid]	A_{pk}		0.78 / 1.4 / -	
Thermal Data				
Max. Winding Temperature (Sensor)	°C		90	
Thermal Resistance [Passive cooling / Fan / Fluid]	°K/W		6.4 / 1.9 / -	
Thermal Time Constant [Passive cooling / Fan / Fluid]	s		770 / 230 / -	
Mechanical Data				
Slider Length	mm	(in)	130	(5.1)
Slider Mass	g	(lb)	90	(0.16)

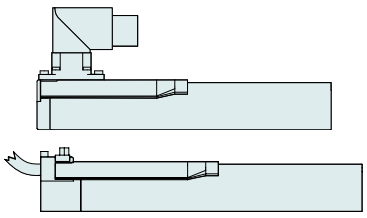



Item	Description	Item-No.
PS01-23x80-R	Stator with IP67 Connector M17/9(m)	0150-1233
PS01-23x80-R20	Stator, 0.2 m cable, IP67 con. M17/9(m)	0150-1241
PS01-23x80	Stator, cable 1m, Connector D-Sub-9(m)	0150-1201
PL01-12x130/90-LC	Slider 'standard LC'	0150-2580
PL02-12x130/90-LC	Slider 'heavy duty LC'	0150-2590

P01-23x80/40x100-LC

Max. Stroke: 100 mm
Peak Force: 44 N

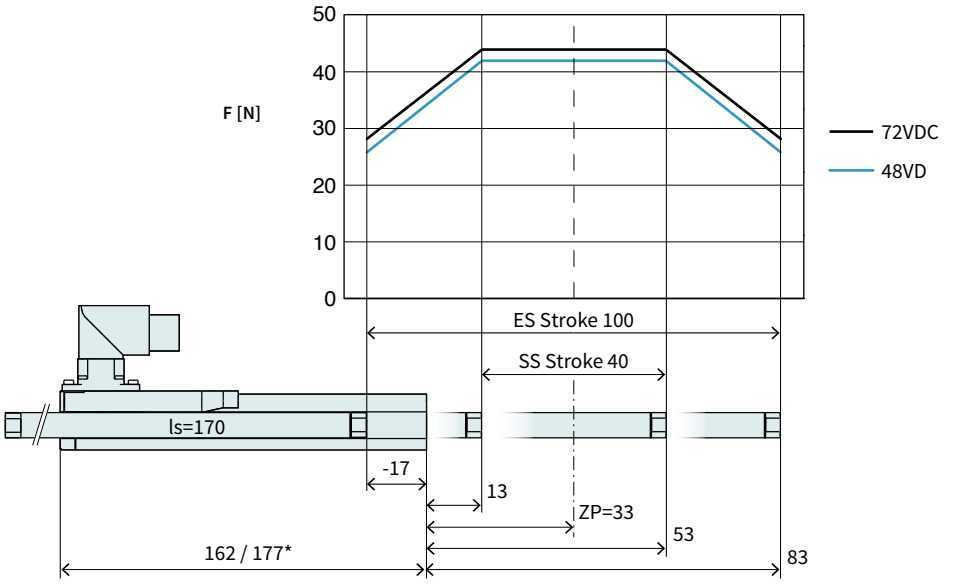

Dimensions in mm
*Cable Type

Technical Data P01-23x80/40x100-LC				
Stroke				
Standard Stroke (SS)	mm	(in)	40	(1.57)
Extended Stroke (ES)	mm	(in)	100	(3.93)
Force				
Max. Force @ 48VDC	N	(lbf)	41.6	(9.35)
Max. Force @ 72VDC	N	(lbf)	44	(9.89)
Max. Cont. Force [Passive cooling/ Fan / Fluid]	N	(lbf)	8.6 / 16 / -	(1.9 / 3.5 / -)
Max. Border Force relative	%		63	
Force Constant	N/A_{pk}	(lbf/A_{pk})	11	(2.47)
Velocity				
Max. Velocity @ 48VDC	m/s	(in/s)	3.9	(159.9)
Max. Velocity @ 72VDC	m/s	(in/s)	5.9	(239.9)
Position Detection				
Repeatability	mm	(in)	±0.05	(±0.002)
Linearity	%		± 0.35	
Electrical Data				
Max. Current @ 48VDC	A_{pk}		3.7	
Max. Current @ 72VDC	A_{pk}		3.9	
Max. Cont. Current [Passive cooling /Fan / Fluid]	A_{pk}		0.78 / 1.4 / -	
Thermal Data				
Max. Winding Temperature (Sensor)	°C		90	
Thermal Resistance [Passive cooling / Fan / Fluid]	°K/W		6.4 / 1.9 / -	
Thermal Time Constant [Passive cooling / Fan / Fluid]	s		770 / 230 / -	
Mechanical Data				
Slider Length	mm	(in)	170	(6.7)
Slider Mass	g	(lb)	130	(0.23)

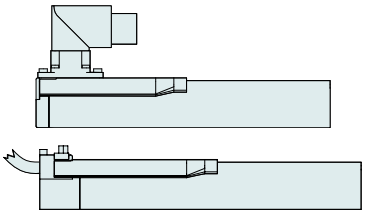



Item	Description	Item-No.
PS01-23x80-R	Stator with IP67 Connector M17/9(m)	0150-1233
PS01-23x80-R20	Stator, 0.2 m cable, IP67 con. M17/9(m)	0150-1241
PS01-23x80	Stator, cable 1m, Connector D-Sub-9(m)	0150-1201
PL01-12x170/130-LC	Slider 'standard LC'	0150-2581
PL02-12x170/130-LC	Slider 'heavy duty LC'	0150-2591

P01-23x80/60x120-LC

Max. Stroke: 120 mm
Peak Force: 44 N

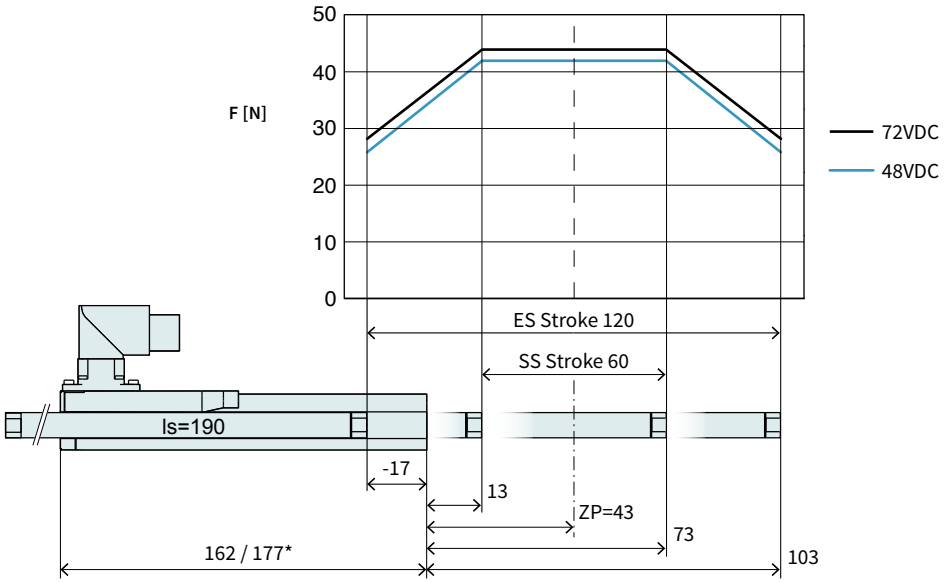

Dimensions in mm
*Cable Type

Technical Data P01-23x80/60x120-LC				
Stroke				
Standard Stroke (SS)	mm	(in)	60	(2.35)
Extended Stroke (ES)	mm	(in)	120	(4.71)
Force				
Max. Force @ 48VDC	N	(lbf)	41.6	(9.35)
Max. Force @ 72VDC	N	(lbf)	44	(9.89)
Max. Cont. Force [Passive cooling/ Fan / Fluid]	N	(lbf)	8.6 / 16 / -	(1.9 / 3.5 / -)
Max. Border Force relative	%		63	
Force Constant	N/A_{pk}	(lbf/A_{pk})	11	(2.47)
Velocity				
Max. Velocity @ 48VDC	m/s	(in/s)	3.9	(159.9)
Max. Velocity @ 72VDC	m/s	(in/s)	5.9	(239.9)
Position Detection				
Repeatability	mm	(in)	±0.05	(±0.002)
Linearity	%		± 0.3	
Electrical Data				
Max. Current @ 48VDC	A_{pk}		3.7	
Max. Current @ 72VDC	A_{pk}		3.9	
Max. Cont. Current [Passive cooling /Fan / Fluid]	A_{pk}		0.78 / 1.4 / -	
Thermal Data				
Max. Winding Temperature (Sensor)	°C		90	
Thermal Resistance [Passive cooling / Fan / Fluid]	°K/W		6.4 / 1.9 / -	
Thermal Time Constant [Passive cooling / Fan / Fluid]	s		770 / 230 / -	
Mechanical Data				
Slider Length	mm	(in)	190	(7.5)
Slider Mass	g	(lb)	145	(0.26)

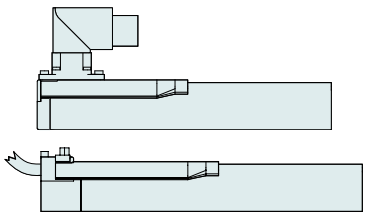



Item	Description	Item-No.
PS01-23x80-R	Stator with IP67 Connector M17/9(m)	0150-1233
PS01-23x80-R20	Stator, 0.2 m cable, IP67 con. M17/9(m)	0150-1241
PS01-23x80	Stator, cable 1m, Connector D-Sub-9(m)	0150-1201
PL01-12x190/150-LC	Slider 'standard LC'	0150-2582
PL02-12x190/150-LC	Slider 'heavy duty LC'	0150-2592

P01-23x80/100x160-LC

Max. Stroke: 160 mm
Peak Force: 44 N

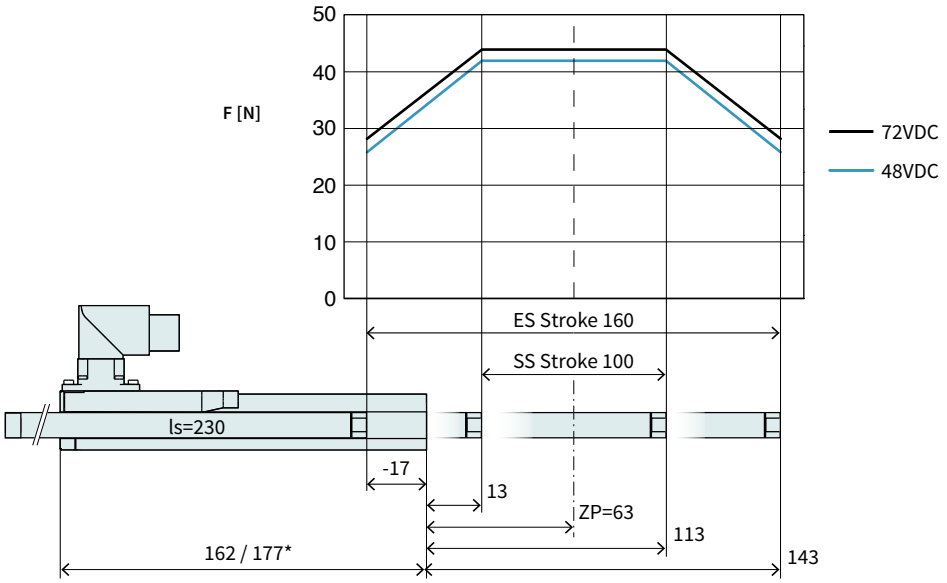

Dimensions in mm
*Cable Type

Technical Data P01-23x80/100x160-LC				
Stroke				
Standard Stroke (SS)	mm	(in)	100	(3.93)
Extended Stroke (ES)	mm	(in)	160	(6.29)
Force				
Max. Force @ 48VDC	N	(lbf)	41.6	(9.35)
Max. Force @ 72VDC	N	(lbf)	44	(9.89)
Max. Cont. Force [Passive cooling/ Fan / Fluid]	N	(lbf)	8.6 / 16 / -	(1.9 / 3.5 / -)
Max. Border Force relative	%		63	
Force Constant	N/A_{pk}	(lbf/A_{pk})	11	(2.47)
Velocity				
Max. Velocity @ 48VDC	m/s	(in/s)	3.9	(159.9)
Max. Velocity @ 72VDC	m/s	(in/s)	5.9	(239.9)
Position Detection				
Repeatability	mm	(in)	±0.05	(±0.002)
Linearity	%		± 0.25	
Electrical Data				
Max. Current @ 48VDC	A_{pk}		3.7	
Max. Current @ 72VDC	A_{pk}		3.9	
Max. Cont. Current [Passive cooling /Fan / Fluid]	A_{pk}		0.78 / 1.4 / -	
Thermal Data				
Max. Winding Temperature (Sensor)	°C		90	
Thermal Resistance [Passive cooling / Fan / Fluid]	°K/W		6.4 / 1.9 / -	
Thermal Time Constant [Passive cooling / Fan / Fluid]	s		770 / 230 / -	
Mechanical Data				
Slider Length	mm	(in)	230	(9.1)
Slider Mass	g	(lb)	180	(0.32)

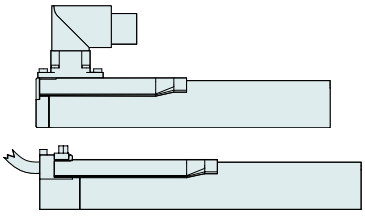



Item	Description	Item-No.
PS01-23x80-R	Stator with IP67 Connector M17/9(m)	0150-1233
PS01-23x80-R20	Stator, 0.2 m cable, IP67 con. M17/9(m)	0150-1241
PS01-23x80	Stator, cable 1m, Connector D-Sub-9(m)	0150-1201
PL01-12x230/190-LC	Slider 'standard LC'	0150-2598
PL02-12x230/190-LC	Slider 'heavy duty LC'	0150-2599

P01-23x80/160x220-LC

Max. Stroke: 220 mm
Peak Force: 44 N

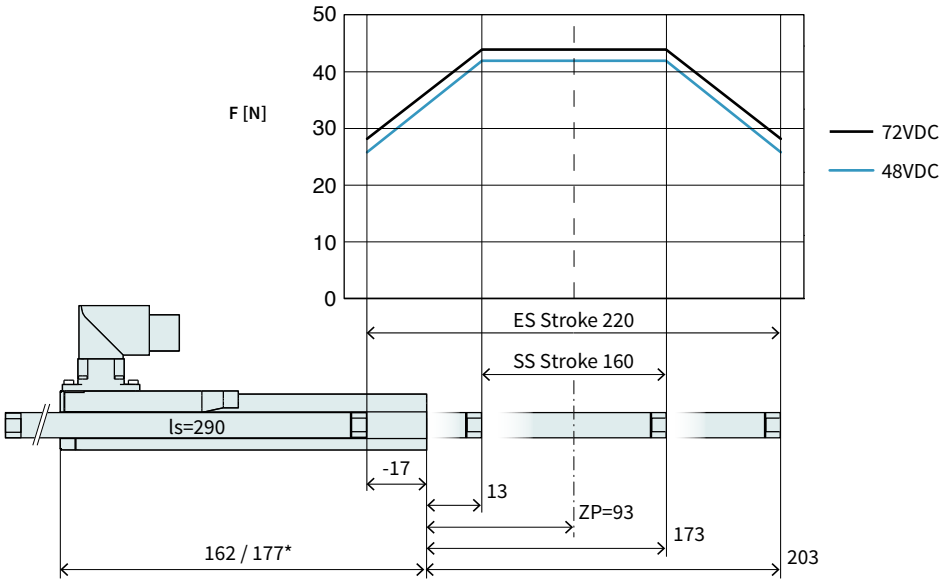

Dimensions in mm
*Cable Type

Technical Data P01-23x80/160x220-LC				
Stroke				
Standard Stroke (SS)	mm	(in)	160	(6.29)
Extended Stroke (ES)	mm	(in)	220	(8.65)
Force				
Max. Force @ 48VDC	N	(lbf)	41.6	(9.35)
Max. Force @ 72VDC	N	(lbf)	44	(9.89)
Max. Cont. Force [Passive cooling/ Fan / Fluid]	N	(lbf)	8.6 / 16 / -	(1.9 / 3.5 / -)
Max. Border Force relative	%		63	
Force Constant	N/A_{pk}	(lbf/A_{pk})	11	(2.47)
Velocity				
Max. Velocity @ 48VDC	m/s	(in/s)	3.9	(159.9)
Max. Velocity @ 72VDC	m/s	(in/s)	5.9	(239.9)
Position Detection				
Repeatability	mm	(in)	±0.05	(±0.002)
Linearity	%		± 0.2	
Electrical Data				
Max. Current @ 48VDC	A_{pk}		3.7	
Max. Current @ 72VDC	A_{pk}		3.9	
Max. Cont. Current [Passive cooling /Fan / Fluid]	A_{pk}		0.78 / 1.4 / -	
Thermal Data				
Max. Winding Temperature (Sensor)	°C		90	
Thermal Resistance [Passive cooling / Fan / Fluid]	°K/W		6.4 / 1.9 / -	
Thermal Time Constant [Passive cooling / Fan / Fluid]	s		770 / 230 / -	
Mechanical Data				
Slider Length	mm	(in)	290	(11)
Slider Mass	g	(lb)	230	(0.41)

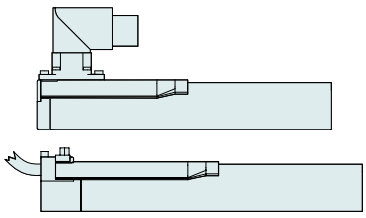



Item	Description	Item-No.
PS01-23x80-R	Stator with IP67 Connector M17/9(m)	0150-1233
PS01-23x80-R20	Stator, 0.2 m cable, IP67 con. M17/9(m)	0150-1241
PS01-23x80	Stator, cable 1m, Connector D-Sub-9(m)	0150-1201
PL01-12x290/250-LC	Slider 'standard LC'	0150-2583
PL02-12x290/250-LC	Slider 'heavy duty LC'	0150-2593

P01-23x80/220x280-LC

Max. Stroke: 280 mm
Peak Force: 44 N

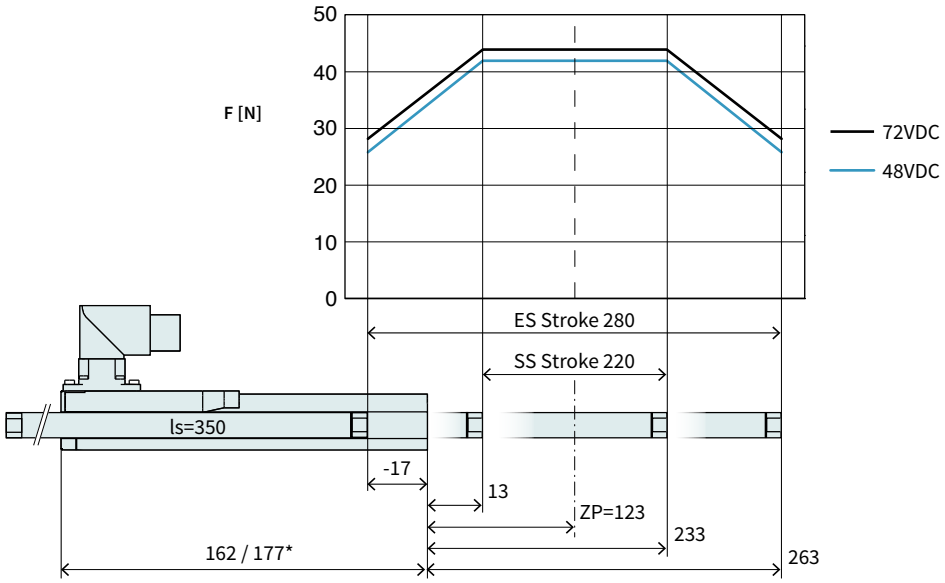

Dimensions in mm
*Cable Type

Technical Data P01-23x80/220x280-LC				
Stroke				
Standard Stroke (SS)	mm	(in)	220	(8.65)
Extended Stroke (ES)	mm	(in)	280	(10.99)
Force				
Max. Force @ 48VDC	N	(lbf)	41.6	(9.35)
Max. Force @ 72VDC	N	(lbf)	44	(9.89)
Max. Cont. Force [Passive cooling/ Fan / Fluid]	N	(lbf)	8.6 / 16 / -	(1.9 / 3.5 / -)
Max. Border Force relative	%		63	
Force Constant	N/A_{pk}	(lbf/A_{pk})	11	(2.47)
Velocity				
Max. Velocity @ 48VDC	m/s	(in/s)	3.9	(159.9)
Max. Velocity @ 72VDC	m/s	(in/s)	5.9	(239.9)
Position Detection				
Repeatability	mm	(in)	±0.05	(±0.002)
Linearity	%		± 0.2	
Electrical Data				
Max. Current @ 48VDC	A_{pk}		3.7	
Max. Current @ 72VDC	A_{pk}		3.9	
Max. Cont. Current [Passive cooling /Fan / Fluid]	A_{pk}		0.78 / 1.4 / -	
Thermal Data				
Max. Winding Temperature (Sensor)	°C		90	
Thermal Resistance [Passive cooling / Fan / Fluid]	°K/W		6.4 / 1.9 / -	
Thermal Time Constant [Passive cooling / Fan / Fluid]	s		770 / 230 / -	
Mechanical Data				
Slider Length	mm	(in)	350	(14)
Slider Mass	g	(lb)	280	(0.5)

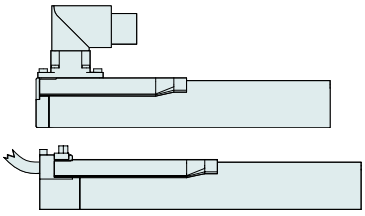

Item	Description	Item-No.
PS01-23x80-R	Stator with IP67 Connector M17/9(m)	0150-1233
PS01-23x80-R20	Stator, 0.2 m cable, IP67 con. M17/9(m)	0150-1241
PS01-23x80	Stator, cable 1m, Connector D-Sub-9(m)	0150-1201



PL01-12x350/310-LC	Slider 'standard LC'	0150-2584
PL02-12x350/310-LC	Slider 'heavy duty LC'	0150-2594

P01-23x80/290x350-LC

Max. Stroke: 350 mm
Peak Force: 44 N

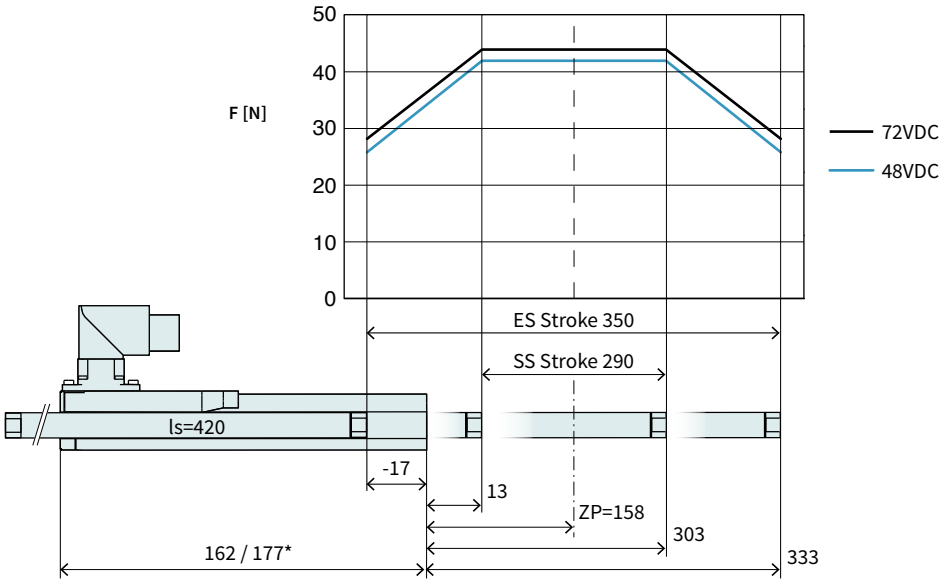

Dimensions in mm
*Cable Type

Technical Data P01-23x80/290x350-LC				
Stroke				
Standard Stroke (SS)	mm	(in)	290	(11.4)
Extended Stroke (ES)	mm	(in)	350	(13.8)
Force				
Max. Force @ 48VDC	N	(lbf)	41.6	(9.35)
Max. Force @ 72VDC	N	(lbf)	44	(9.89)
Max. Cont. Force [Passive cooling/ Fan / Fluid]	N	(lbf)	8.6 / 16 / -	(1.9 / 3.5 / -)
Max. Border Force relative	%		63	
Force Constant	N/A_{pk}	(lbf/A_{pk})	11	(2.47)
Velocity				
Max. Velocity @ 48VDC	m/s	(in/s)	3.9	(159.9)
Max. Velocity @ 72VDC	m/s	(in/s)	5.9	(239.9)
Position Detection				
Repeatability	mm	(in)	±0.05	(±0.002)
Linearity	%		± 0.15	
Electrical Data				
Max. Current @ 48VDC	A_{pk}		3.7	
Max. Current @ 72VDC	A_{pk}		3.9	
Max. Cont. Current [Passive cooling /Fan / Fluid]	A_{pk}		0.78 / 1.4 / -	
Thermal Data				
Max. Winding Temperature (Sensor)	°C		90	
Thermal Resistance [Passive cooling / Fan / Fluid]	°K/W		6.4 / 1.9 / -	
Thermal Time Constant [Passive cooling / Fan / Fluid]	s		770 / 230 / -	
Mechanical Data				
Slider Length	mm	(in)	420	(17)
Slider Mass	g	(lb)	340	(0.61)

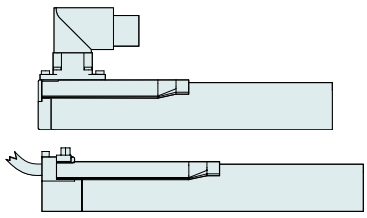



Item	Description	Item-No.
PS01-23x80-R	Stator with IP67 Connector M17/9(m)	0150-1233
PS01-23x80-R20	Stator, 0.2 m cable, IP67 con. M17/9(m)	0150-1241
PS01-23x80	Stator, cable 1m, Connector D-Sub-9(m)	0150-1201
PL01-12x420/380-LC	Slider 'standard LC'	0150-2585
PL02-12x420/380-LC	Slider 'heavy duty LC'	0150-2595

P01-23x80/350x410-LC

Max. Stroke: 410 mm
Peak Force: 44 N

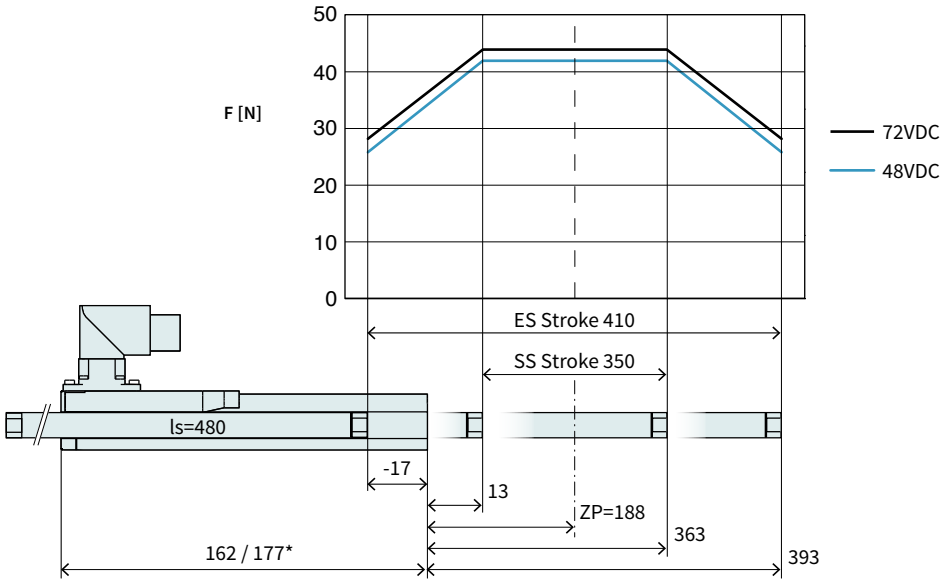

Dimensions in mm
*Cable Type

Technical Data P01-23x80/350x410-LC				
Stroke				
Standard Stroke (SS)	mm	(in)	350	(13.8)
Extended Stroke (ES)	mm	(in)	410	(16.1)
Force				
Max. Force @ 48VDC	N	(lbf)	41.6	(9.35)
Max. Force @ 72VDC	N	(lbf)	44	(9.89)
Max. Cont. Force [Passive cooling/ Fan / Fluid]	N	(lbf)	8.6 / 16 / -	(1.9 / 3.5 / -)
Max. Border Force relative	%		63	
Force Constant	N/A_{pk}	(lbf/A_{pk})	11	(2.47)
Velocity				
Max. Velocity @ 48VDC	m/s	(in/s)	3.9	(159.9)
Max. Velocity @ 72VDC	m/s	(in/s)	5.9	(239.9)
Position Detection				
Repeatability	mm	(in)	±0.05	(±0.002)
Linearity	%		± 0.15	
Electrical Data				
Max. Current @ 48VDC	A_{pk}		3.7	
Max. Current @ 72VDC	A_{pk}		3.9	
Max. Cont. Current [Passive cooling /Fan / Fluid]	A_{pk}		0.78 / 1.4 / -	
Thermal Data				
Max. Winding Temperature (Sensor)	°C		90	
Thermal Resistance [Passive cooling / Fan / Fluid]	°K/W		6.4 / 1.9 / -	
Thermal Time Constant [Passive cooling / Fan / Fluid]	s		770 / 230 / -	
Mechanical Data				
Slider Length	mm	(in)	480	(19)
Slider Mass	g	(lb)	390	(0.7)

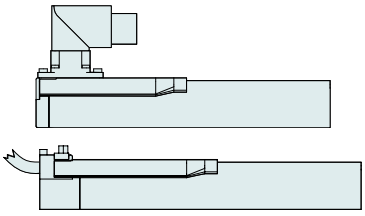

Item	Description	Item-No.
PS01-23x80-R	Stator with IP67 Connector M17/9(m)	0150-1233
PS01-23x80-R20	Stator, 0.2 m cable, IP67 con. M17/9(m)	0150-1241
PS01-23x80	Stator, cable 1m, Connector D-Sub-9(m)	0150-1201



PL01-12x480/440-LC	Slider 'standard LC'	0150-2586
PL02-12x480/440-LC	Slider 'heavy duty LC'	0150-2597

P01-23x80/450x510-LC

Max. Stroke: 510 mm
Peak Force: 44 N

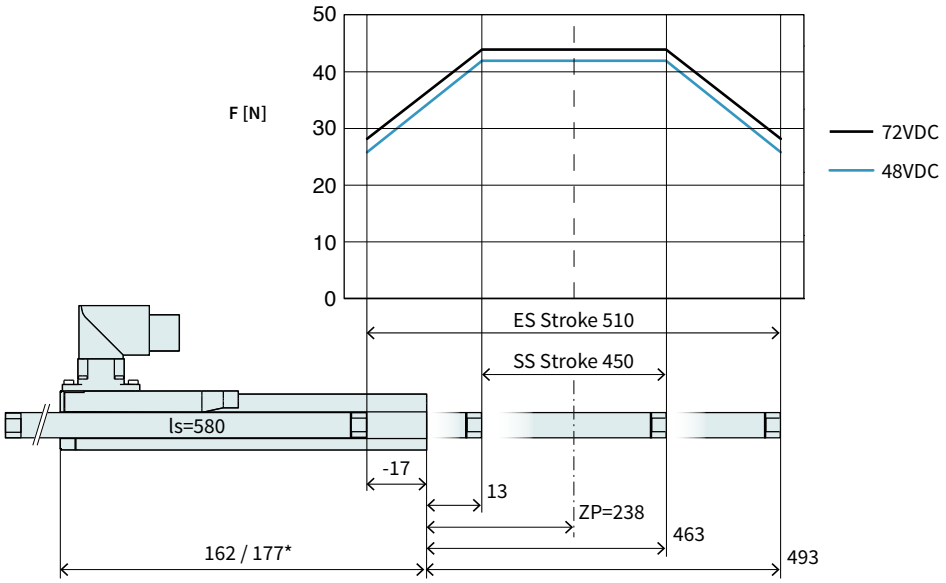

Dimensions in mm
*Cable Type

Technical Data P01-23x80/450x510-LC				
Stroke				
Standard Stroke (SS)	mm	(in)	450	(17.69)
Extended Stroke (ES)	mm	(in)	510	(20.1)
Force				
Max. Force @ 48VDC	N	(lbf)	41.6	(9.35)
Max. Force @ 72VDC	N	(lbf)	44	(9.89)
Max. Cont. Force [Passive cooling/ Fan / Fluid]	N	(lbf)	8.6 / 16 / -	(1.9 / 3.5 / -)
Max. Border Force relative	%		63	
Force Constant	N/A_{pk}	(lbf/A_{pk})	11	(2.47)
Velocity				
Max. Velocity @ 48VDC	m/s	(in/s)	3.9	(159.9)
Max. Velocity @ 72VDC	m/s	(in/s)	5.9	(239.9)
Position Detection				
Repeatability	mm	(in)	±0.05	(±0.002)
Linearity	%		± 0.15	
Electrical Data				
Max. Current @ 48VDC	A_{pk}		3.7	
Max. Current @ 72VDC	A_{pk}		3.9	
Max. Cont. Current [Passive cooling /Fan / Fluid]	A_{pk}		0.78 / 1.4 / -	
Thermal Data				
Max. Winding Temperature (Sensor)	°C		90	
Thermal Resistance [Passive cooling / Fan / Fluid]	°K/W		6.4 / 1.9 / -	
Thermal Time Constant [Passive cooling / Fan / Fluid]	s		770 / 230 / -	
Mechanical Data				
Slider Length	mm	(in)	580	(23)
Slider Mass	g	(lb)	480	(0.86)

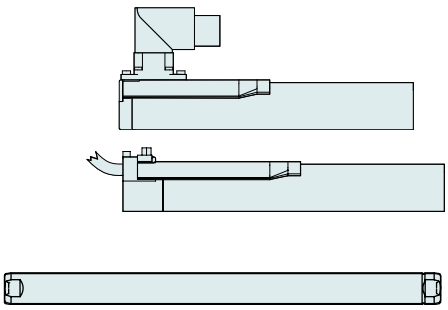

Item	Description	Item-No.
PS01-23x80-R	Stator with IP67 Connector M17/9(m)	0150-1233
PS01-23x80-R20	Stator, 0.2 m cable, IP67 con. M17/9(m)	0150-1241
PS01-23x80	Stator, cable 1m, Connector D-Sub-9(m)	0150-1201
PL01-12x580/540-LC	Slider 'standard LC'	0150-2587
PL02-12x580/540-LC	Slider 'heavy duty LC'	0150-2596

P01-23x80/630x690-LC

Max. Stroke: 690 mm
Peak Force: 44 N

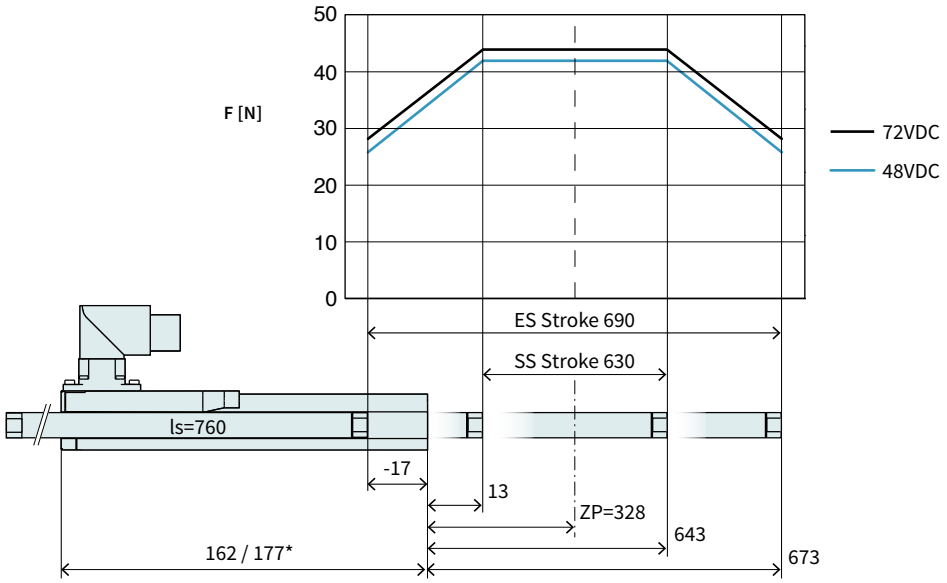

Dimensions in mm
*Cable Type

Technical Data P01-23x80/630x690-LC				
Stroke				
Standard Stroke (SS)	mm	(in)	630	(24.8)
Extended Stroke (ES)	mm	(in)	690	(27.19)
Force				
Max. Force @ 48VDC	N	(lbf)	41.6	(9.35)
Max. Force @ 72VDC	N	(lbf)	44	(9.89)
Max. Cont. Force [Passive cooling/ Fan / Fluid]	N	(lbf)	8.6 / 16 / -	(1.9 / 3.5 / -)
Max. Border Force relative	%		63	
Force Constant	N/A_{pk}	(lbf/A_{pk})	11	(2.47)
Velocity				
Max. Velocity @ 48VDC	m/s	(in/s)	3.9	(159.9)
Max. Velocity @ 72VDC	m/s	(in/s)	5.9	(239.9)
Position Detection				
Repeatability	mm	(in)	±0.05	(±0.002)
Linearity	%		± 0.15	
Electrical Data				
Max. Current @ 48VDC	A_{pk}		3.7	
Max. Current @ 72VDC	A_{pk}		3.9	
Max. Cont. Current [Passive cooling /Fan / Fluid]	A_{pk}		0.78 / 1.4 / -	
Thermal Data				
Max. Winding Temperature (Sensor)	°C		90	
Thermal Resistance [Passive cooling / Fan / Fluid]	°K/W		6.4 / 1.9 / -	
Thermal Time Constant [Passive cooling / Fan / Fluid]	s		770 / 230 / -	
Mechanical Data				
Slider Length	mm	(in)	760	(30)
Slider Mass	g	(lb)	630	(1.1)

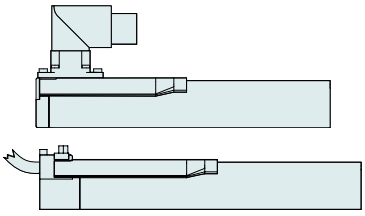



Item	Description	Item-No.
PS01-23x80-R	Stator with IP67 Connector M17/9(m)	0150-1233
PS01-23x80-R20	Stator, 0.2 m cable, IP67 con. M17/9(m)	0150-1241
PS01-23x80	Stator, cable 1m, Connector D-Sub-9(m)	0150-1201
PL01-12x760/720-LC	Slider 'standard LC'	0150-2589
PL01-12x760/720-LC	Slider 'heavy duty LC'	on request

P01-23x80/720x780-LC

Max. Stroke: 780 mm
Peak Force: 44 N

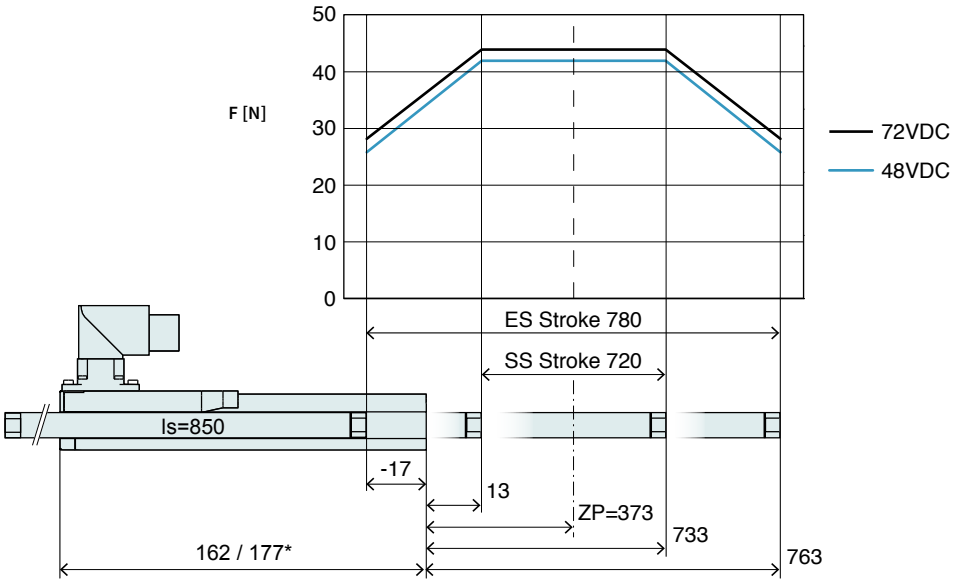

Dimensions in mm
*Cable Type

Technical Data P01-23x80/720x780-LC				
Stroke				
Standard Stroke (SS)	mm	(in)	720	(28.3)
Extended Stroke (ES)	mm	(in)	780	(30.69)
Force				
Max. Force @ 48VDC	N	(lbf)	41.6	(9.35)
Max. Force @ 72VDC	N	(lbf)	44	(9.89)
Max. Cont. Force [Passive cooling/ Fan / Fluid]	N	(lbf)	8.6 / 16 / -	(1.9 / 3.5 / -)
Max. Border Force relative	%		63	
Force Constant	N/A_{pk}	(lbf/A_{pk})	11	(2.47)
Velocity				
Max. Velocity @ 48VDC	m/s	(in/s)	3.9	(159.9)
Max. Velocity @ 72VDC	m/s	(in/s)	5.9	(239.9)
Position Detection				
Repeatability	mm	(in)	±0.05	(±0.002)
Linearity	%		± 0.15	
Electrical Data				
Max. Current @ 48VDC	A_{pk}		3.7	
Max. Current @ 72VDC	A_{pk}		3.9	
Max. Cont. Current [Passive cooling /Fan / Fluid]	A_{pk}		0.78 / 1.4 / -	
Thermal Data				
Max. Winding Temperature (Sensor)	°C		90	
Thermal Resistance [Passive cooling / Fan / Fluid]	°K/W		6.4 / 1.9 / -	
Thermal Time Constant [Passive cooling / Fan / Fluid]	s		770 / 230 / -	
Mechanical Data				
Slider Length	mm	(in)	850	(33)
Slider Mass	g	(lb)	700	(1.3)

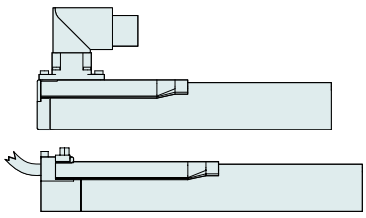



Item	Description	Item-No.
PS01-23x80-R	Stator with IP67 Connector M17/9(m)	0150-1233
PS01-23x80-R20	Stator, 0.2 m cable, IP67 con. M17/9(m)	0150-1241
PS01-23x80	Stator, cable 1m, Connector D-Sub-9(m)	0150-1201
PL01-12x850/810-LC	Slider 'standard LC'	0150-2588
PL02-12x850/810-LC	Slider 'heavy duty LC'	on request

Linear Guides H01



HM01-23x80/60	**Linear Module 23x80 with 60 mm Stroke**		
H-Guide	H01-23x86/60	H-Guide for P01-23x80, Stroke max 60 mm	0150-5014
	H01-23x86/60-GF	H-Guide for P01-23x80, Stroke max 60 mm	0150-5074
Stator	PS01-23x80-R	Stator with IP67 connector M17/9(m)	0150-1233
	PS01-23x80-R20	Stator, 0.2 m cable, IP67 con. M17/9(m)	0150-1241
	PS01-23x80	Stator, cable 1 m, connector D-Sub-9(m)	0150-1201
Slider	PL01-12x190/150-LC	Slider 'standard LC'	0150-2582
HM01-23x80/160	**Linear Module 23x80 with 160mm Stroke**		
H-Guide	H01-23x86/160	H-Guide for P01-23x80, Stroke max 160 mm	0150-5015
	H01-23x86/160-GF	H-Guide for P01-23x80, Stroke max 160 mm	0150-5075
Stator	PS01-23x80-R	Stator with IP67 connector M17/9(m)	0150-1233
	PS01-23x80-R20	Stator, 0.2 m cable, IP67 con. M17/9(m)	0150-1241
	PS01-23x80	Stator, cable 1 m, connector D-Sub-9(m)	0150-1201
Slider	PL01-12x290/250-LC	Slider 'standard LC'	0150-2583
HM01-23x80/260	**Linear Module 23x80 with 260mm Stroke**		
H-Guide	H01-23x86/260	H-Guide for P01-23x80, Stroke max 260 mm	0150-5016
	H01-23x86/260-GF	H-Guide for P01-23x80, Stroke max 260 mm	0150-5076
Stator	PS01-23x80-R	Stator with IP67 connector M17/9(m)	0150-1233
	PS01-23x80-R20	Stator, 0.2m cable, IP67 con. M17/9(m)	0150-1241
	PS01-23x80	Stator, cable 1m, connector D-Sub-9(m)	0150-1201
Slider	PL01-12x420/380-LC	Slider 'standard LC'	0150-2585
Accessories			
Fan	HV01-23	Fan cooling for H01-23	0150-5050
MagSpring	MF01-20/H23	Flange MagSpring 20 / H-Guide 23	0250-2306
	MA01-20/H23	Adapter MagSpring 20 / H-Guide 23	0250-0116
Centering sleeve	HC01-09/04	Centering sleeve D9x4 mm	0150-3251

FIND MORE PRODUCT DETAILS IN THE CHAPTER "LINEAR GUIDES".

MOTOR CABLE

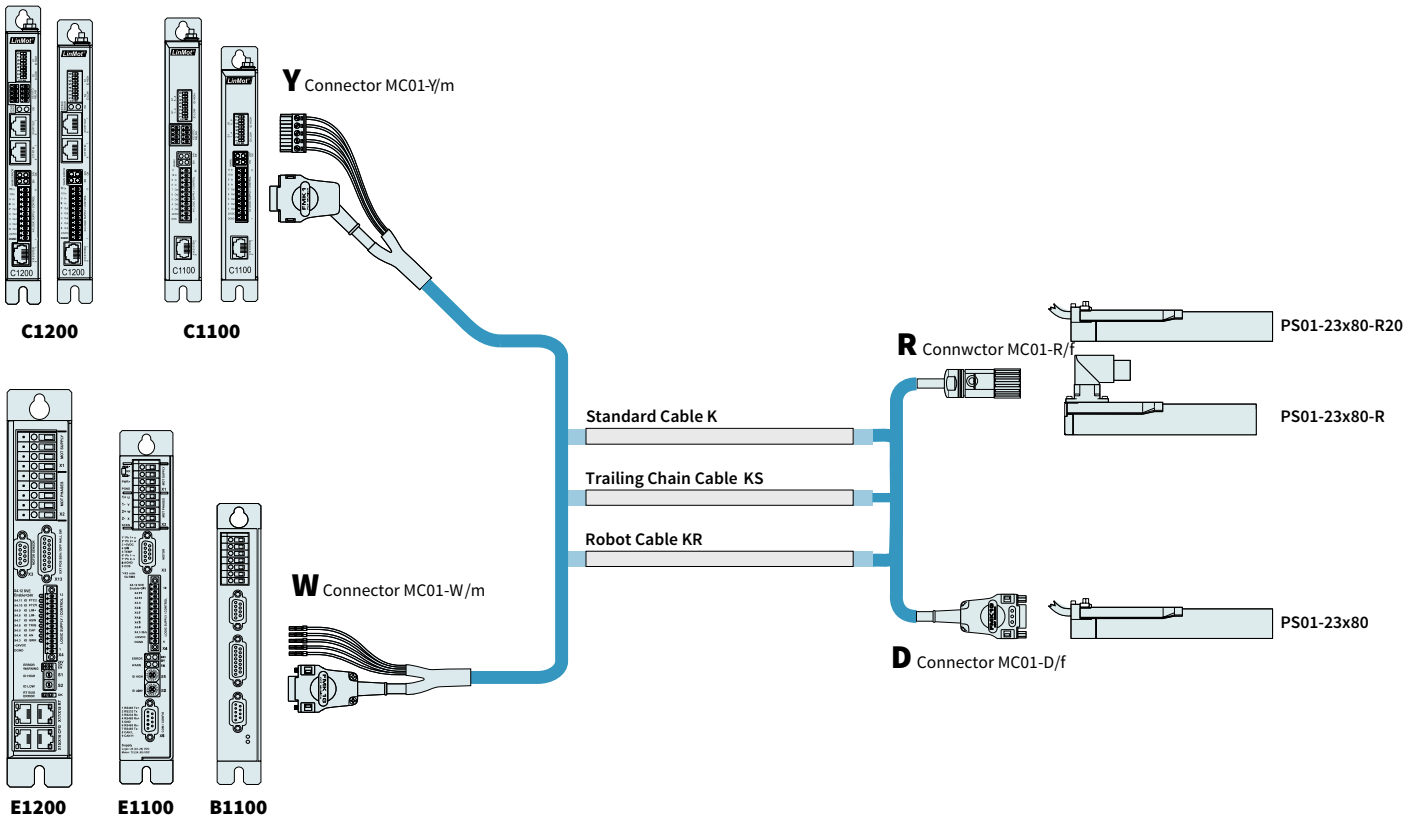

ORDERING INFORMATION

STANDARD CABLE		
Item	**Description**	**Item-No.**
K05-W/R-2	Motor Cable W/R, 2 m	0150-2119
K05-W/R-4	Motor Cable W/R, 4 m	0150-2120
K05-W/R-6	Motor Cable W/R, 6 m	0150-2121
K05-W/R-8	Motor Cable W/R, 8 m	0150-2122
K05-W/R-	Motor Cable W/R, Custom length	0150-3262
K05-W/D-0.4	Motor Cable W/D, 0.4 m	0150-1947
K05-Y/R-2	Motor Cable Y/R, 2 m	0150-2421
K05-Y/R-4	Motor Cable Y/R, 4 m	0150-2422
K05-Y/R-6	Motor Cable Y/R, 6 m	0150-2423
K05-Y/R-8	Motor Cable Y/R, 8 m	0150-2424
K05-Y-Fe/R-	Motor Cable Y/R, Custom length	0150-3501
K05-Y-Fe/D-	Motor Cable Y-Fe/D, Custom length	0150-1947

TRAILING CHAIN CABLE		
Item	**Description**	**Item-No.**
KS05-W/R-4	Trailing Chain Cable W/R, 4 m	0150-2106
KS05-W/R-6	Trailing Chain Cable W/R, 6 m	0150-2131
KS05-W/R-8	Trailing Chain Cable W/R, 8 m	0150-2107
KS05-W/R-	Trailing Chain Cable W/R, Custom length	0150-3256
KS05-Y/R-4	Trailing Chain Cable Y/R, 4 m	0150-2433
KS05-Y/R-6	Trailing Chain Cable Y/R, 6 m	0150-2434
KS05-Y/R-8	Trailing Chain Cable Y/R, 8 m	0150-2435
KS05-Y-Fe/R-	Trailing Chain Cable Y-Fe/R, Custom length	0150-3507
KS05-Y-Fe/D-	Trailing Chain Cable Y-Fe/D, Custom length	0150-3556

ROBOT CABLE		
Item	**Description**	**Item-No.**
KR05-W/R-	Robot Cable KR05-W/R, Custom length	0150-3336
KR05-Y-Fe/R-	Robot Cable KR05-Y-Fe/R, Custom length	0150-3512

CONNECTOR & CABLE (INDIVIDUAL)		
Item	**Description**	**Item-No.**
MC01-W/m	Motor Connector W/m	0150-3140
MC01-Y-Fe/m	Motor Connector Y-Fe/m	0150-3289
MC01-R/f	Motor Connector R/f	0150-3129
MC01-D/f	Motor Connector D/f	0150-3025
K05-04/05	Motor Cable per m	0150-1920
KS05-04/05	Trailing Chain Cable per m	0150-1938
KR05-04/05	Robot Cable per m	0150-1846

MOTOR FLANGES



Item	Description	Item-No.
PF02-23x50	Flange 23x50 mm	0150-2102
PF02-23x90	Flange 23x90 mm	0150-2146

FIND MORE PRODUCT DETAILS IN THE CHAPTER "ACCESSORIES".

FANS



Item	Description	Item-No.
HV01-23	Fan cooling for H01-23 and PF02-23	0150-5050

FIND MORE PRODUCT DETAILS IN THE CHAPTER "ACCESSORIES".

SLIDER MOUNTING





Item	Description	Item-No.
PLF01-12	Fixed End Washer Set for 12 mm sliders	0150-3085
PLF01-12-Ni	Fixed End Washer Set for 12 mm sliders nickel-plated	0150-3573
PLL02-12	Floating support for PL01-12 Sliders	0150-3111

FIND MORE PRODUCT DETAILS IN THE CHAPTER "ACCESSORIES".

WIPERS



Item	Description	Item-No.
PA01-23/12-F	Seal front side for PS01-23x...	0150-3125

FIND MORE PRODUCT DETAILS IN THE CHAPTER "ACCESSORIES".

EXTERNAL POSITION SENSORS



Item	Description	Item-No.
MS01-1/D	Linear Encoder 1 µm, A/B (for incremental strip)	0150-1840
MB01-1000	Magnetic incremental strip for MS01-1/D, per cm	0150-1963
KS025-D/D-Encoder	Encoder Cable (Length in m)	0150-3166
KS025-D/D15-Encoder	Encoder Cable (Length in m)	0150-3168

FIND MORE PRODUCT DETAILS IN THE CHAPTER "ACCESSORIES".



Item	Description	Item-No.
MS01-1/D-SSI	Linear Encoder 1 µm, A/B(for absolute strip)	0150-2095
MB01-1000-ABS	Magnetic absolute strip for MS01-1/D-SSI (per cm)	0150-2096
EC01-ABS/ENC-12-S	MS01-1/D-SSI Encoder connector straigth	0150-3616
KSS01-12-D15/ABS-ENC	Special cable for MS01-1/D-SSI on C1100/C1200/C1400/E1200/E1400 Drives	0150-3652

FIND MORE PRODUCT DETAILS IN THE CHAPTER "ACCESSORIES".

LINEAR MOTORS P01-23x80F-HP



- Higher maximum peak force and acceleration
- Increased duration of force and acceleration
- Higher permissible operating temperatures with less self-heating
- In comparison with the standard motors , a smaller HP motor can be used with the same load.

LINEAR MOTORS P01-23x80F-HP

Technical Data **51**

Motor Specifications

P01-23x80F/0x60-HP **55**

P01-23x80F/20x80-HP **56**

P01-23x80F/40x100-HP **57**

P01-23x80F/70x130-HP **58**

P01-23x80F/100x160-HP **59**

P01-23x80F/140x200-HP **60**

P01-23x80F/160x220-HP **61**

P01-23x80F/220x280-HP **62**

P01-23x80F/290x350-HP **63**

P01-23x80F/350x410-HP **64**

P01-23x80F/450x510-HP **65**

P01-23x80F/630x690-HP **66**

P01-23x80F/720x780-HP **67**

Linear Guides **68**

Accessories **69**



MOTOR FAMILY P01-23x80F-HP

Technical Data				
Stroke				
Standard Stroke (SS)	mm	(in)	≤ 720	(≤ 28.3)
Extended Stroke (ES)	mm	(in)	≤ 780	(≤ 30.69)
Force				
Max. Force @ 48VDC	N	(lbf)	67.1	(15.1)
Max. Force @ 72VDC	N	(lbf)	67.1	(15.1)
Max. Cont. Force [Passive cooling/ Fan / Fluid]	N	(lbf)	14 / 23 / -	(3.2 / 5.3 / -)
Max. Border Force relative	%		≤ 63	
Force Constant	N/A_{pk}	(lbf/A_{pk})	8.95	(2.01)
Velocity				
Max. Velocity @ 48VDC	m/s	(in/s)	4.9	(189.9)
Max. Velocity @ 72VDC	m/s	(in/s)	7.3	(289.9)
Position Detection				
Position Resolution	mm	(in)	0.002	(0.0001)
Repeatability	mm	(in)	±0.05	(±0.002)
Position Resolution with ES	mm	(in)	0.001	(0.00004)
Repeatability with ES	mm	(in)	±0.01	(±0.0004)
Linearity with ES	mm	(in)	±0.01	(±0.0004)
Electrical Data				
Max. Current @ 48VDC	A_{pk}		7.4	
Max. Current @ 72VDC	A_{pk}		7.4	
Max. Cont. Current [Passive cooling /Fan / Fluid]	A_{pk}		1.6 / 2.6 / -	
Terminal Resistance 25 °C / 150 °C	Ohm		4.2 / 6.2	
Terminal Inductivity	mH		0.6	
Magnetic Period	mm	(in)	20	(0.78)
Thermal Data				
Max. Winding Temperature (Sensor)	°C		120	
Thermal Resistance [Passive cooling / Fan / Fluid]	°K/W		5.4 / 2 / -	
Thermal Time Constant [Passive cooling / Fan / Fluid]	s		650 / 240 / -	
Mechanical Data				
Stator Diameter	mm	(in)	23	(0.91)
Stator Length [Connector type / Cable type]	mm	(in)	162 / 177	(6.4 / 7)
Stator Mass	g	(lb)	265	(0.58)
Slider Diameter	mm	(in)	12	(0.47)
Slider Length	mm	(in)	130 - 850	(5.1 - 33)
Slider Mass	g	(lb)	90 - 700	(0.19 - 1.5)
IP Code			IP 65	

STATOR CONNECTOR TYPE

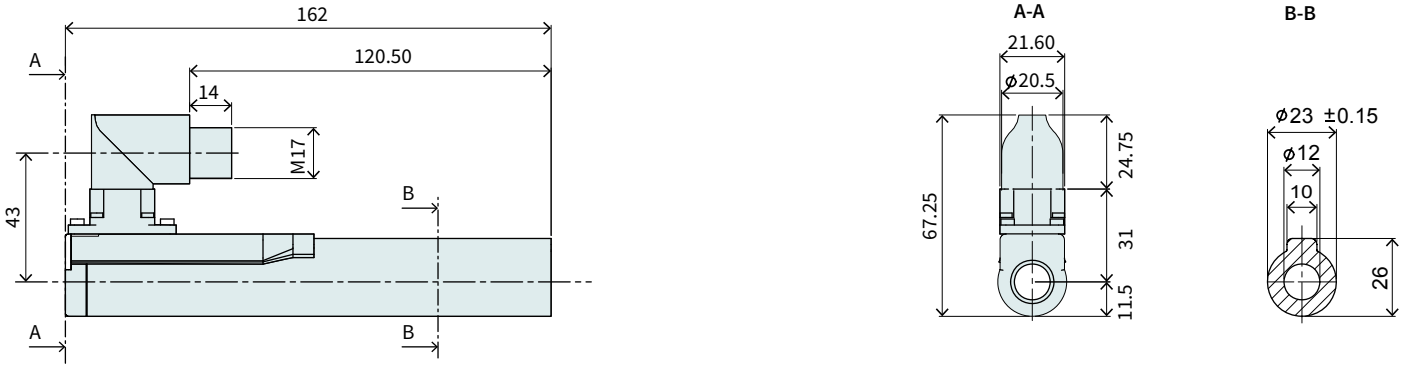

Item	Description	Item-No.
PS01-23x80F-HP-R	Stator HP with IP67 Connector M17/9(m)	0150-1259

STATOR CABLE TYPE

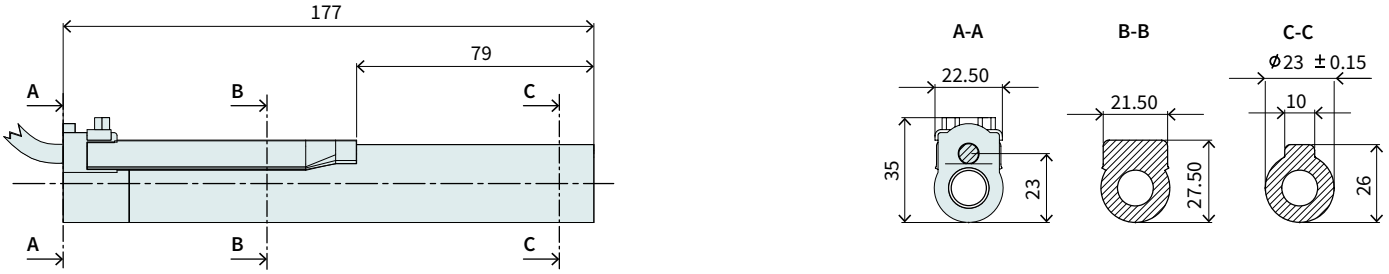

Item	Description	Item-No.
PS01-23x80F-HP-R20	Stator HP, 0.2m Cable, IP67 St. M17/9(m)	0150-1260

CONNECTOR

Motor Connector Wiring	PS01-23x80F-HP-R PS01-23x80F-HP-R20 R-Connector	Wire color motor cable
Ph 1+	1	red
Ph 1-	2	pink
Ph 2+	3	blue
Ph 2-	4	grey
+5VDC	A	white
GND	B	inner shield
Sin	C	yellow
Cos	D	green
Temp.	E	black
Shield	Housing	outer Shield

R-Connector

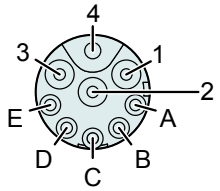

View: Motor Connector, plug side

SLIDER

Number of grooves determines the slider type
(see chapter 2 / slider) and marks the front end.

Slider HP / Heavy Duty HP

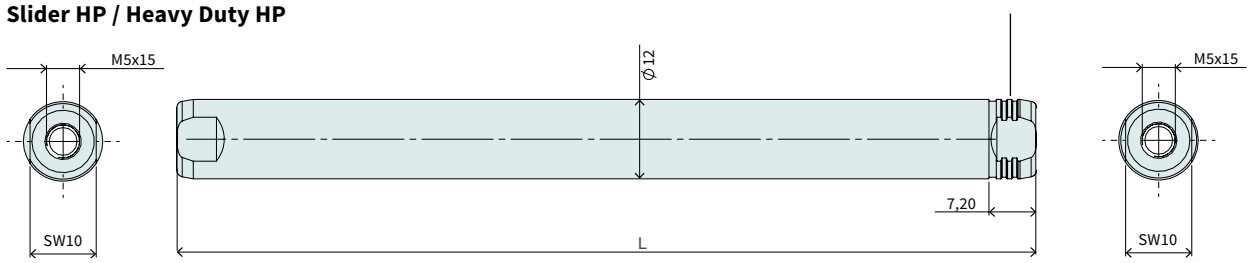

Hollow slider HP

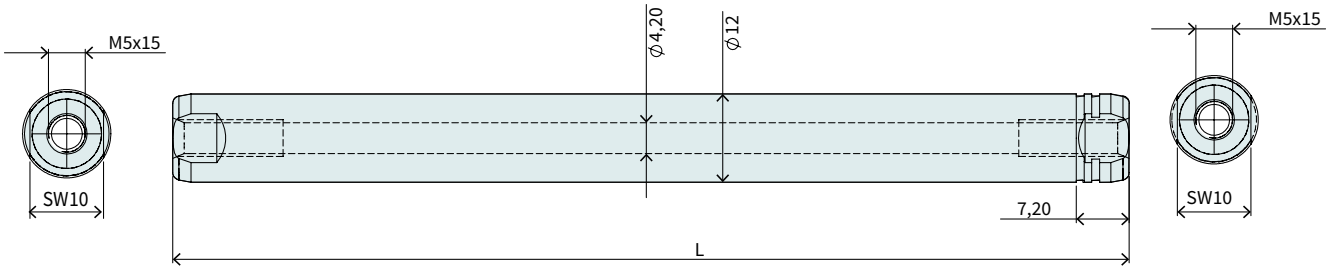

Slider High Performance				
Item	**Description**	**Max. Stroke [mm]**	**Standard Stroke [mm]**	**Item-No.**
PL01-12x130/90-HP	Slider 'High Performance'	60	0	0150-2209
PL01-12x150/110-HP	Slider 'High Performance'	80	20	0150-2281
PL01-12x170/130-HP	Slider 'High Performance'	100	40	0150-1529
PL01-12x200/160-HP	Slider 'High Performance'	130	70	0150-1518
PL01-12x230/190-HP	Slider 'High Performance'	160	100	0150-1519
PL01-12x270/230-HP	Slider 'High Performance'	200	140	0150-1520
PL01-12x290/250-HP	Slider 'High Performance'	220	160	0150-1521
PL01-12x350/310-HP	Slider 'High Performance'	280	220	0150-1522
PL01-12x420/380-HP	Slider 'High Performance'	350	290	0150-1523
PL01-12x480/440-HP	Slider 'High Performance'	410	350	0150-1524
PL01-12x580/540-HP	Slider 'High Performance'	510	450	0150-1525
PL01-12x760/720-HP	Slider 'High Performance'	690	630	0150-1526
PL01-12x850/810-HP	Slider 'High Performance'	780	720	0150-1527

Slider Heavy Duty High Performance				
Item	**Description**	**Max. Stroke [mm]**	**Standard Stroke [mm]**	**Item-No.**
PL02-12x130/90-HP	Slider 'heavy duty' 'High Performance	60	0	on request
PL02-12x150/110-HP	Slider 'heavy duty' 'High Performance	80	20	on request
PL02-12x170/130-HP	Slider 'heavy duty' 'High Performance	100	40	0150-1559
PL02-12x200/160-HP	Slider 'heavy duty' 'High Performance	130	70	0150-1532
PL02-12x230/190-HP	Slider 'heavy duty' 'High Performance	160	100	0150-1552
PL02-12x270/230-HP	Slider 'heavy duty' 'High Performance	200	140	0150-1533
PL02-12x290/250-HP	Slider 'heavy duty' 'High Performance	220	160	0150-1495
PL02-12x350/310-HP	Slider 'heavy duty' 'High Performance	280	220	0150-1555
PL02-12x420/380-HP	Slider 'heavy duty' 'High Performance	350	290	0150-1554
PL02-12x480/440-HP	Slider 'heavy duty' 'High Performance	410	350	0150-2519
PL02-12x580/540-HP	Slider 'heavy duty' 'High Performance	510	450	0150-2520
PL02-12x760/720-HP	Slider 'heavy duty' 'High Performance	690	630	0150-2521
PL02-12x850/810-HP	Slider 'heavy duty' 'High Performance	780	720	0150-2516

Slider 'High Performance L'				
Item	Description	Max. Stroke [mm]	Standard Stroke [mm]	Item-No.
PL01-12x130/90-HP-L	Slider 'High Performance L'	60	0	0150-3687
PL01-12x150/110-HP-L	Slider 'High Performance L'	80	20	on request
PL02-12x170/130-HP-L	Slider 'High Performance L'	100	40	0150-3688
PL02-12x200/160-HP-L	Slider 'High Performance L'	130	70	0150-3689
PL02-12x230/190-HP-L	Slider 'High Performance L'	160	100	0150-2546
PL02-12x270/230-HP-L	Slider 'High Performance L'	200	140	0150-2557
PL02-12x290/250-HP-L	Slider 'High Performance L'	220	160	0150-3690
PL02-12x350/310-HP-L	Slider 'High Performance L'	280	220	0150-3691
PL02-12x420/380-HP-L	Slider 'High Performance L'	350	290	0150-3692
PL02-12x480/440-HP-L	Slider 'High Performance L'	410	350	0150-3693
PL02-12x580/540-HP-L	Slider 'High Performance L'	510	450	0150-3694
PL02-12x760/720-HP-L	Slider 'High Performance L'	690	630	0150-3695
PL02-12x850/810-HP-L	Slider 'High Performance L'	780	720	on request

P01-23x80F/0x60-HP

Max. Stroke: 60 mm
Peak Force: 67 N

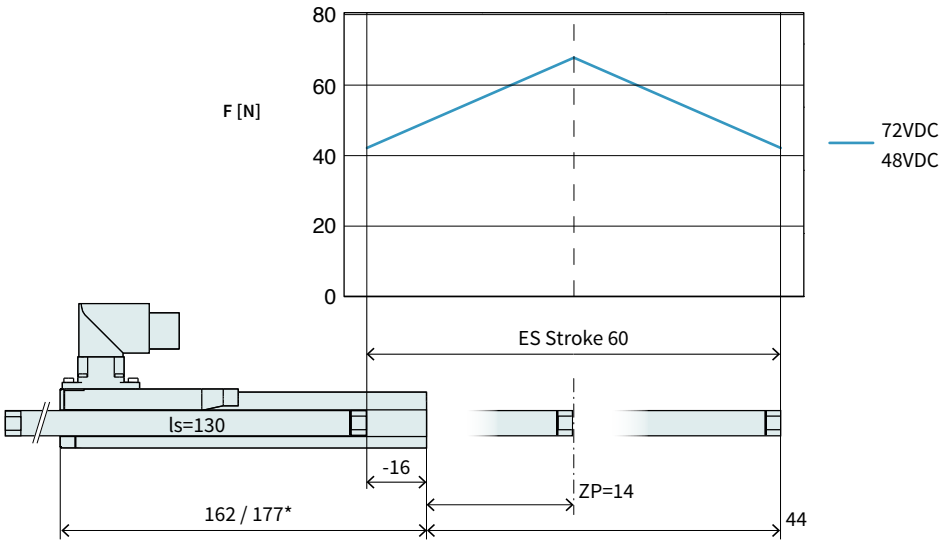

Dimensions in mm
*Cable Type

Technical Data P01-23x80F/0x60-HP				
Stroke				
Standard Stroke (SS)	mm	(in)	0	(0)
Extended Stroke (ES)	mm	(in)	60	(2.35)
Force				
Max. Force @ 48VDC	N	(lbf)	67.1	(15.1)
Max. Force @ 72VDC	N	(lbf)	67.1	(15.1)
Max. Cont. Force [Passive cooling/ Fan / Fluid]	N	(lbf)	14 / 23 / -	(3.2 / 5.3 / -)
Max. Border Force relative	%		63	
Force Constant	N/A_{pk}	(lbf/A_{pk})	8.95	(2.01)
Velocity				
Max. Velocity @ 48VDC	m/s	(in/s)	4.9	(189.9)
Max. Velocity @ 72VDC	m/s	(in/s)	7.3	(289.9)
Position Detection				
Repeatability	mm	(in)	±0.05	(±0.002)
Linearity	%		± 0.5	
Electrical Data				
Max. Current @ 48VDC	A_{pk}		7.4	
Max. Current @ 72VDC	A_{pk}		7.4	
Max. Cont. Current [Passive cooling /Fan / Fluid]	A_{pk}		1.6 / 2.6 / -	
Thermal Data				
Max. Winding Temperature (Sensor)	°C		120	
Thermal Resistance [Passive cooling / Fan / Fluid]	°K/W		5.4 / 2 / -	
Thermal Time Constant [Passive cooling / Fan / Fluid]	s		650 / 240 / -	
Mechanical Data				
Slider Length	mm	(in)	130	(5.1)
Slider Mass	g	(lb)	90	(0.2)

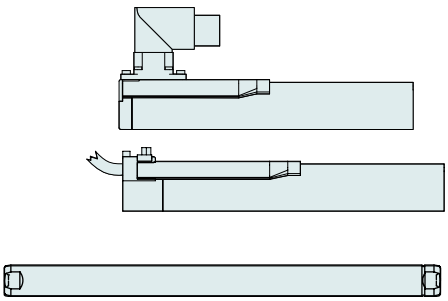

Item	Description	Item-No.
PS01-23x80F-HP-R	Stator HP with IP67 Connector M17/9(m)	0150-1259
PS01-23x80F-HP-R20	Stator HP, 0.2m Cable, IP67 St. M17/9(m)	0150-1260
PL01-12x130/90-HP	Slider 'High Performance'	0150-2209
PL02-12x130/90-HP	Slider 'heavy duty' 'High Performance	on request
PL01-12x130/90-HP-L*	Slider 'High Performance L'	0150-3687

* With this slider, the motor specifications above change.

P01-23x80F/20x80-HP

Max. Stroke: 80 mm
Peak Force: 67 N

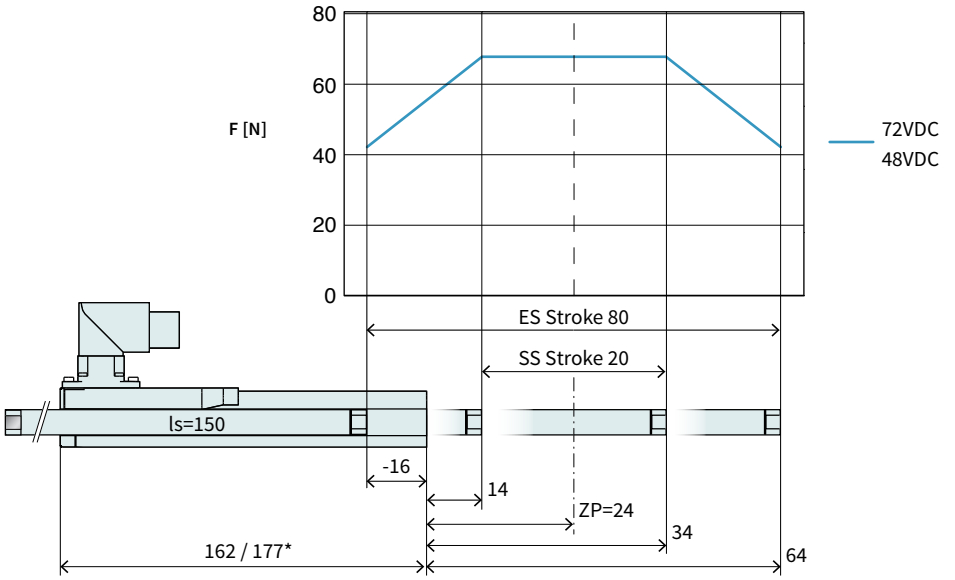

Dimensions in mm
*Cable Type

Technical Data P01-23x80F/20x80-HP				
Stroke				
Standard Stroke (SS)	mm	(in)	20	(0.78)
Extended Stroke (ES)	mm	(in)	80	(3.14)
Force				
Max. Force @ 48VDC	N	(lbf)	67.1	(15.1)
Max. Force @ 72VDC	N	(lbf)	67.1	(15.1)
Max. Cont. Force [Passive cooling/ Fan / Fluid]	N	(lbf)	14 / 23 / -	(3.2 / 5.3 / -)
Max. Border Force relative	%		63	
Force Constant	N/A_{pk}	(lbf/A_{pk})	8.95	(2.01)
Velocity				
Max. Velocity @ 48VDC	m/s	(in/s)	4.9	(189.9)
Max. Velocity @ 72VDC	m/s	(in/s)	7.3	(289.9)
Position Detection				
Repeatability	mm	(in)	±0.05	(±0.002)
Linearity	%		± 0.4	
Electrical Data				
Max. Current @ 48VDC	A_{pk}		7.4	
Max. Current @ 72VDC	A_{pk}		7.4	
Max. Cont. Current [Passive cooling /Fan / Fluid]	A_{pk}		1.6 / 2.6 / -	
Thermal Data				
Max. Winding Temperature (Sensor)	°C		120	
Thermal Resistance [Passive cooling / Fan / Fluid]	°K/W		5.4 / 2 / -	
Thermal Time Constant [Passive cooling / Fan / Fluid]	s		650 / 240 / -	
Mechanical Data				
Slider Length	mm	(in)	150	(5.9)
Slider Mass	g	(lb)	110	(0.24)

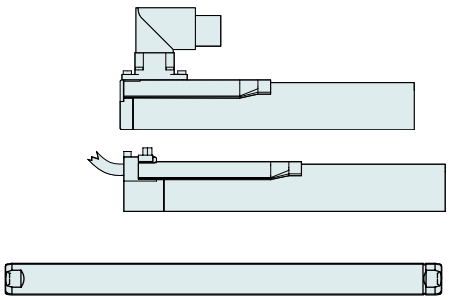

Item	Description	Item-No.
PS01-23x80F-HP-R	Stator HP with IP67 Connector M17/9(m)	0150-1259
PS01-23x80F-HP-R20	Stator HP, 0.2m Cable, IP67 St. M17/9(m)	0150-1260
PL01-12x150/110-HP	Slider 'High Performance'	0150-2281
PL02-12x150/110-HP	Slider 'heavy duty' 'High Performance	on request
PL01-12x150/110-HP-L*	Slider 'High Performance L'	on request

* With this slider, the motor specifications above change.

P01-23x80F/40x100-HP

Max. Stroke: 100 mm
Peak Force: 67 N

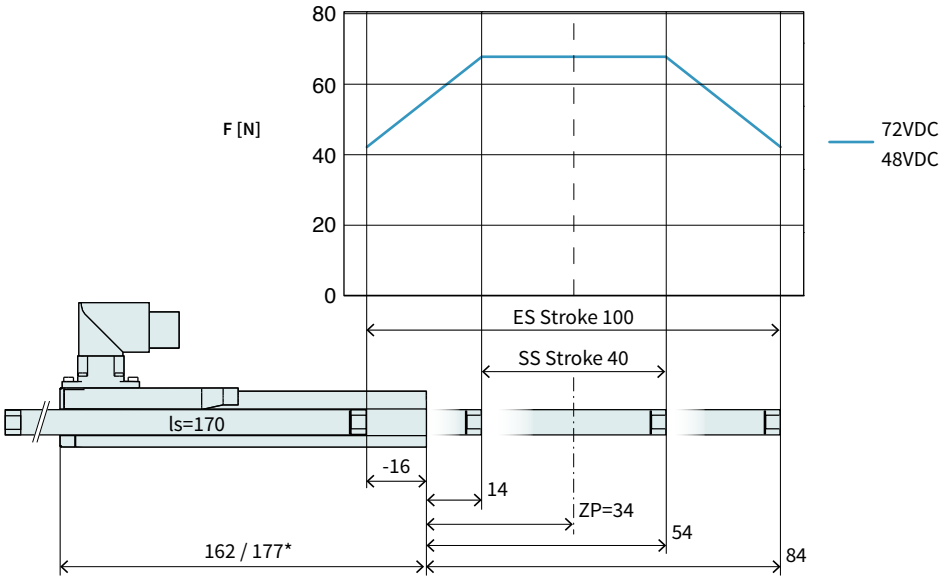

Dimensions in mm
*Cable Type

Technical Data P01-23x80F/40x100-HP				
Stroke				
Standard Stroke (SS)	mm	(in)	40	(1.57)
Extended Stroke (ES)	mm	(in)	100	(3.93)
Force				
Max. Force @ 48VDC	N	(lbf)	67.1	(15.1)
Max. Force @ 72VDC	N	(lbf)	67.1	(15.1)
Max. Cont. Force [Passive cooling/ Fan / Fluid]	N	(lbf)	14 / 23 / -	(3.2 / 5.3 / -)
Max. Border Force relative	%		63	
Force Constant	N/A_{pk}	(lbf/A_{pk})	8.95	(2.01)
Velocity				
Max. Velocity @ 48VDC	m/s	(in/s)	4.9	(189.9)
Max. Velocity @ 72VDC	m/s	(in/s)	7.3	(289.9)
Position Detection				
Repeatability	mm	(in)	±0.05	(±0.002)
Linearity	%		± 0.35	
Electrical Data				
Max. Current @ 48VDC	A_{pk}		7.4	
Max. Current @ 72VDC	A_{pk}		7.4	
Max. Cont. Current [Passive cooling /Fan / Fluid]	A_{pk}		1.6 / 2.6 / -	
Thermal Data				
Max. Winding Temperature (Sensor)	°C		120	
Thermal Resistance [Passive cooling / Fan / Fluid]	°K/W		5.4 / 2 / -	
Thermal Time Constant [Passive cooling / Fan / Fluid]	s		650 / 240 / -	
Mechanical Data				
Slider Length	mm	(in)	170	(6.7)
Slider Mass	g	(lb)	130	(0.29)

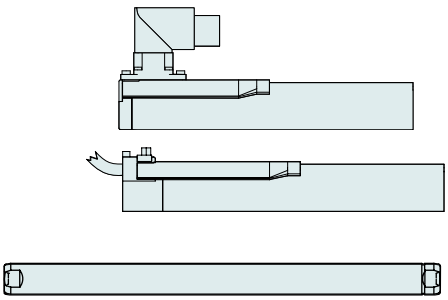

Item	Description	Item-No.
PS01-23x80F-HP-R	Stator HP with IP67 Connector M17/9(m)	0150-1259
PS01-23x80F-HP-R20	Stator HP, 0.2m Cable, IP67 St. M17/9(m)	0150-1260
PL01-12x170/130-HP	Slider 'High Performance'	0150-1529
PL02-12x170/130-HP	Slider 'heavy duty' 'High Performance	0150-1559
PL01-12x170/130-HP-L*	Slider 'High Performance L'	0150-3688

* With this slider, the motor specifications above change.

P01-23x80F/70x130-HP

Max. Stroke: 130 mm
Peak Force: 67 N

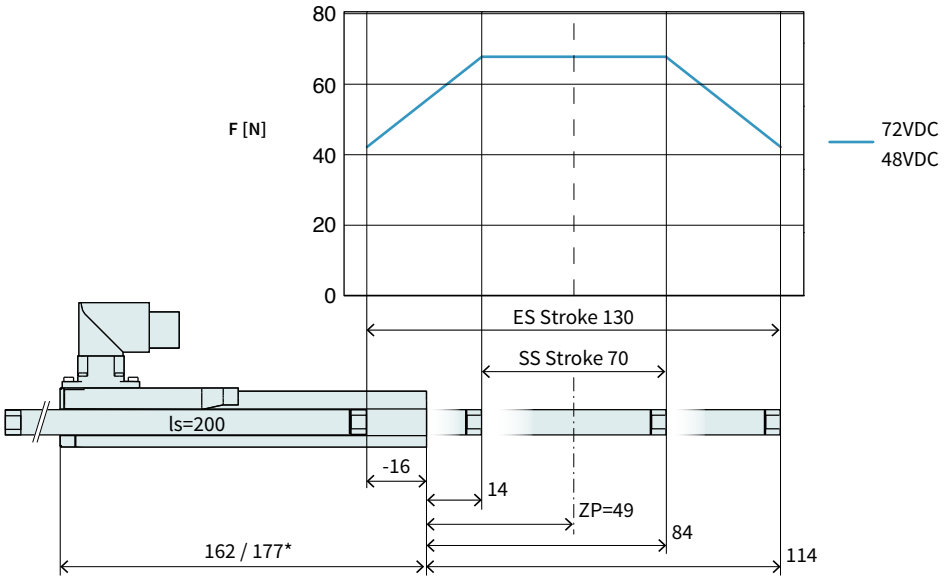

Dimensions in mm
*Cable Type

Technical Data P01-23x80F/70x130-HP				
Stroke				
Standard Stroke (SS)	mm	(in)	70	(2.75)
Extended Stroke (ES)	mm	(in)	130	(5.12)
Force				
Max. Force @ 48VDC	N	(lbf)	67.1	(15.1)
Max. Force @ 72VDC	N	(lbf)	67.1	(15.1)
Max. Cont. Force [Passive cooling/ Fan / Fluid]	N	(lbf)	14 / 23 / -	(3.2 / 5.3 / -)
Max. Border Force relative	%		63	
Force Constant	N/A_{pk}	(lbf/A_{pk})	8.95	(2.01)
Velocity				
Max. Velocity @ 48VDC	m/s	(in/s)	4.9	(189.9)
Max. Velocity @ 72VDC	m/s	(in/s)	7.3	(289.9)
Position Detection				
Repeatability	mm	(in)	±0.05	(±0.002)
Linearity	%		± 0.3	
Electrical Data				
Max. Current @ 48VDC	A_{pk}		7.4	
Max. Current @ 72VDC	A_{pk}		7.4	
Max. Cont. Current [Passive cooling /Fan / Fluid]	A_{pk}		1.6 / 2.6 / -	
Thermal Data				
Max. Winding Temperature (Sensor)	°C		120	
Thermal Resistance [Passive cooling / Fan / Fluid]	°K/W		5.4 / 2 / -	
Thermal Time Constant [Passive cooling / Fan / Fluid]	s		650 / 240 / -	
Mechanical Data				
Slider Length	mm	(in)	200	(7.9)
Slider Mass	g	(lb)	155	(0.34)

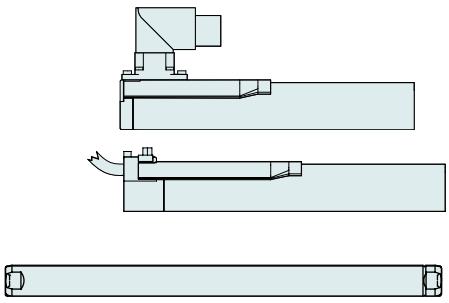

Item	Description	Item-No.
PS01-23x80F-HP-R	Stator HP with IP67 Connector M17/9(m)	0150-1259
PS01-23x80F-HP-R20	Stator HP, 0.2m Cable, IP67 St. M17/9(m)	0150-1260
PL01-12x200/160-HP	Slider 'standard LC'	0150-1518
PL02-12x200/160-HP	Slider 'heavy duty LC'	0150-1532
PL01-12x200/160-HP-L*	Slider 'High Performance L'	0150-3689

* With this slider, the motor specifications above change.

P01-23x80F/100x160-HP

Max. Stroke: 160 mm
Peak Force: 67 N

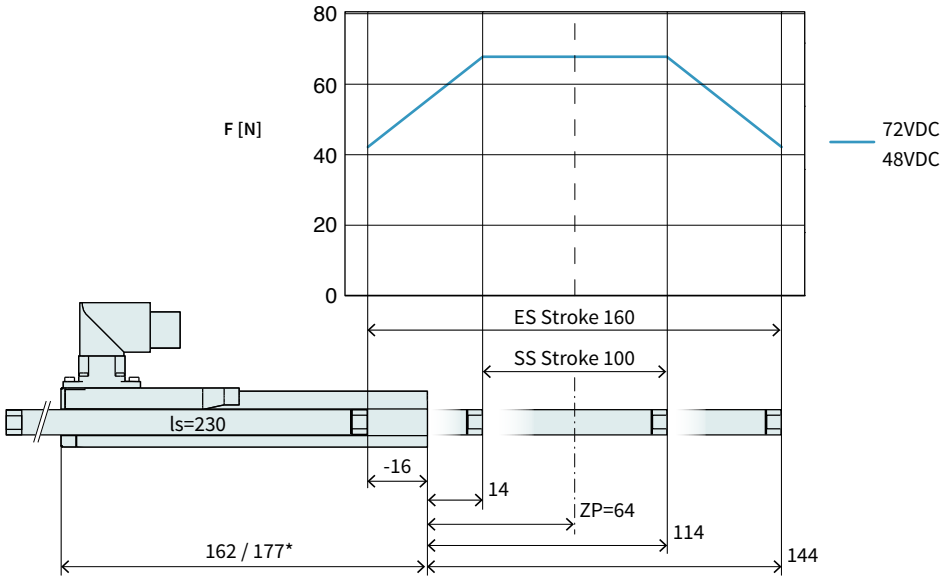

Dimensions in mm
*Cable Type

Technical Data P01-23x80F/100x160-HP				
Stroke				
Standard Stroke (SS)	mm	(in)	100	(3.93)
Extended Stroke (ES)	mm	(in)	160	(6.29)
Force				
Max. Force @ 48VDC	N	(lbf)	67.1	(15.1)
Max. Force @ 72VDC	N	(lbf)	67.1	(15.1)
Max. Cont. Force [Passive cooling/ Fan / Fluid]	N	(lbf)	14 / 23 / -	(3.2 / 5.3 / -)
Max. Border Force relative	%		63	
Force Constant	N/A_{pk}	(lbf/A_{pk})	8.95	(2.01)
Velocity				
Max. Velocity @ 48VDC	m/s	(in/s)	4.9	(189.9)
Max. Velocity @ 72VDC	m/s	(in/s)	7.3	(289.9)
Position Detection				
Repeatability	mm	(in)	±0.05	(±0.002)
Linearity	%		± 0.25	
Electrical Data				
Max. Current @ 48VDC	A_{pk}		7.4	
Max. Current @ 72VDC	A_{pk}		7.4	
Max. Cont. Current [Passive cooling /Fan / Fluid]	A_{pk}		1.6 / 2.6 / -	
Thermal Data				
Max. Winding Temperature (Sensor)	°C		120	
Thermal Resistance [Passive cooling / Fan / Fluid]	°K/W		5.4 / 2 / -	
Thermal Time Constant [Passive cooling / Fan / Fluid]	s		650 / 240 / -	
Mechanical Data				
Slider Length	mm	(in)	230	(9.1)
Slider Mass	g	(lb)	180	(0.4)

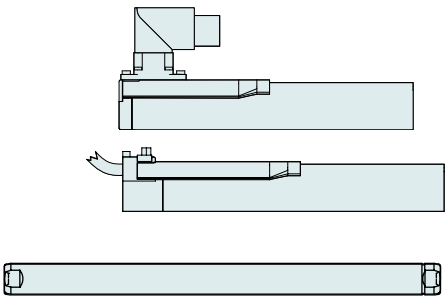

Item	Description	Item-No.
PS01-23x80F-HP-R	Stator HP with IP67 Connector M17/9(m)	0150-1259
PS01-23x80F-HP-R20	Stator HP, 0.2m Cable, IP67 St. M17/9(m)	0150-1260
PL01-12x230/190-HP	Slider 'High Performance'	0150-1519
PL02-12x230/190-HP	Slider 'heavy duty' 'High Performance	0150-1552
PL01-12x230/190-HP-L*	Slider 'High Performance L'	0150-2546

* With this slider, the motor specifications above change.

P01-23x80F/140x200-HP

Max. Stroke: 200 mm
Peak Force: 67 N

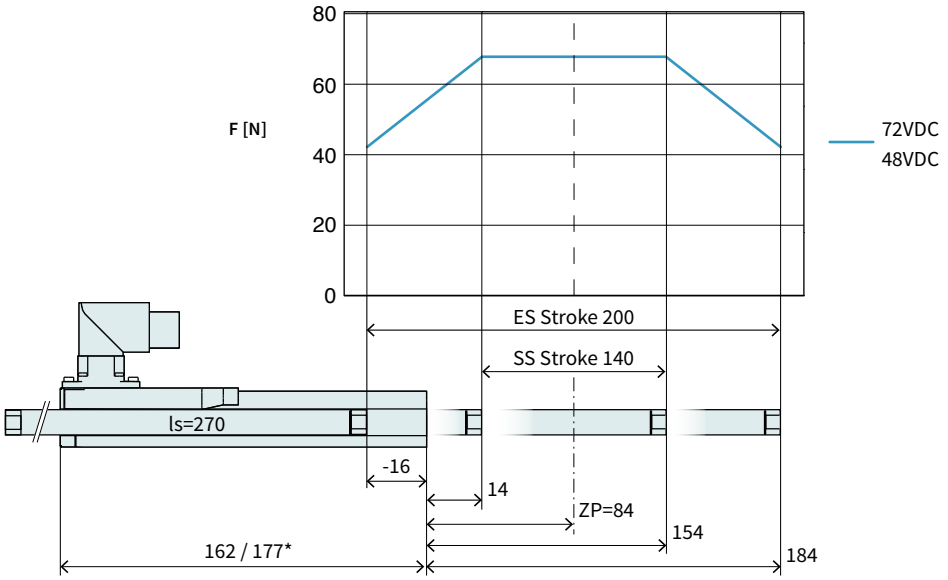

Dimensions in mm
*Cable Type

Technical Data P01-23x80F/140x200-HP				
Stroke				
Standard Stroke (SS)	mm	(in)	140	(5.5)
Extended Stroke (ES)	mm	(in)	200	(7.86)
Force				
Max. Force @ 48VDC	N	(lbf)	67.1	(15.1)
Max. Force @ 72VDC	N	(lbf)	67.1	(15.1)
Max. Cont. Force [Passive cooling/ Fan / Fluid]	N	(lbf)	14 / 23 / -	(3.2 / 5.3 / -)
Max. Border Force relative	%		63	
Force Constant	N/A_{pk}	(lbf/A_{pk})	8.95	(2.01)
Velocity				
Max. Velocity @ 48VDC	m/s	(in/s)	4.9	(189.9)
Max. Velocity @ 72VDC	m/s	(in/s)	7.3	(289.9)
Position Detection				
Repeatability	mm	(in)	±0.05	(±0.002)
Linearity	%		± 0.2	
Electrical Data				
Max. Current @ 48VDC	A_{pk}		7.4	
Max. Current @ 72VDC	A_{pk}		7.4	
Max. Cont. Current [Passive cooling /Fan / Fluid]	A_{pk}		1.6 / 2.6 / -	
Thermal Data				
Max. Winding Temperature (Sensor)	°C		120	
Thermal Resistance [Passive cooling / Fan / Fluid]	°K/W		5.4 / 2 / -	
Thermal Time Constant [Passive cooling / Fan / Fluid]	s		650 / 240 / -	
Mechanical Data				
Slider Length	mm	(in)	270	(11)
Slider Mass	g	(lb)	215	(0.47)

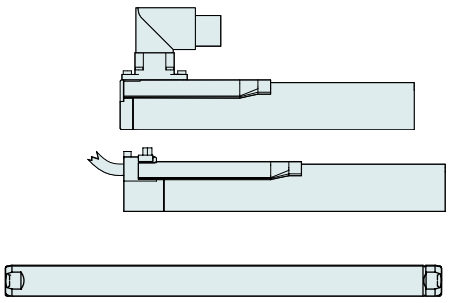

Item	Description	Item-No.
PS01-23x80F-HP-R	Stator HP with IP67 Connector M17/9(m)	0150-1259
PS01-23x80F-HP-R20	Stator HP, 0.2m Cable, IP67 St. M17/9(m)	0150-1260
PL01-12x270/230-HP	Slider 'standard LC'	0150-1520
PL02-12x270/230-HP	Slider 'heavy duty LC'	0150-1533
PL01-12x270/230-HP-L*	Slider 'High Performance L'	0150-2557

* With this slider, the motor specifications above change.

P01-23x80F/160x220-HP

Max. Stroke: 220 mm
Peak Force: 67 N

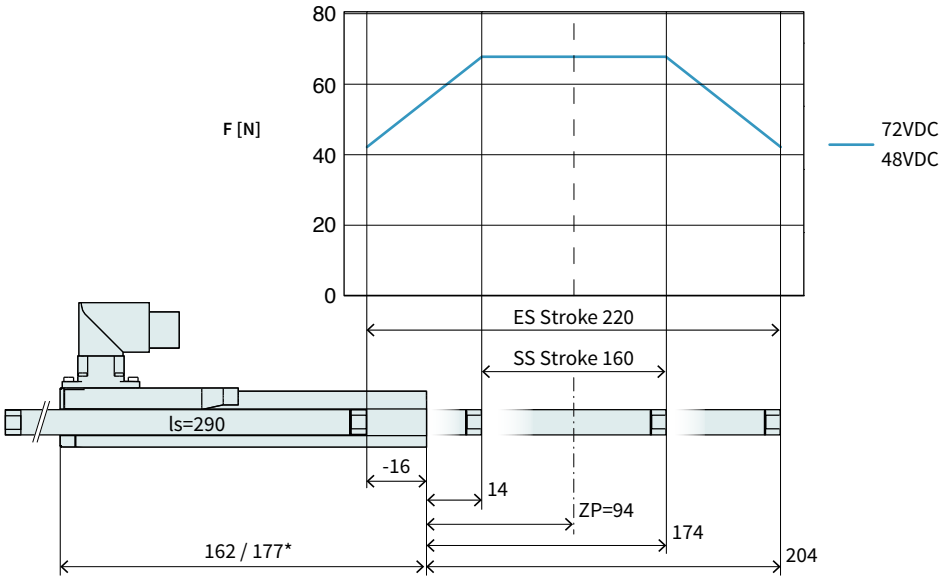

Dimensions in mm
*Cable Type

Technical Data P01-23x80F/160x220-HP				
Stroke				
Standard Stroke (SS)	mm	(in)	160	(6.29)
Extended Stroke (ES)	mm	(in)	220	(8.65)
Force				
Max. Force @ 48VDC	N	(lbf)	67.1	(15.1)
Max. Force @ 72VDC	N	(lbf)	67.1	(15.1)
Max. Cont. Force [Passive cooling/ Fan / Fluid]	N	(lbf)	14 / 23 / -	(3.2 / 5.3 / -)
Max. Border Force relative	%		63	
Force Constant	N/A_{pk}	(lbf/A_{pk})	8.95	(2.01)
Velocity				
Max. Velocity @ 48VDC	m/s	(in/s)	4.9	(189.9)
Max. Velocity @ 72VDC	m/s	(in/s)	7.3	(289.9)
Position Detection				
Repeatability	mm	(in)	±0.05	(±0.002)
Linearity	%		± 0.2	
Electrical Data				
Max. Current @ 48VDC	A_{pk}		7.4	
Max. Current @ 72VDC	A_{pk}		7.4	
Max. Cont. Current [Passive cooling /Fan / Fluid]	A_{pk}		1.6 / 2.6 / -	
Thermal Data				
Max. Winding Temperature (Sensor)	°C		120	
Thermal Resistance [Passive cooling / Fan / Fluid]	°K/W		5.4 / 2 / -	
Thermal Time Constant [Passive cooling / Fan / Fluid]	s		650 / 240 / -	
Mechanical Data				
Slider Length	mm	(in)	290	(11)
Slider Mass	g	(lb)	230	(0.51)

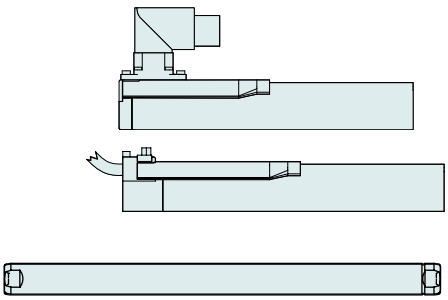

Item	Description	Item-No.
PS01-23x80F-HP-R	Stator HP with IP67 Connector M17/9(m)	0150-1259
PS01-23x80F-HP-R20	Stator HP, 0.2m Cable, IP67 St. M17/9(m)	0150-1260
PL01-12x290/250-HP	Slider 'High Performance'	0150-1521
PL02-12x290/250-HP	Slider 'heavy duty' 'High Performance	0150-1495
PL01-12x290/250-HP-L*	Slider 'High Performance L'	0150-3690

* With this slider, the motor specifications above change.

P01-23x80F/220x280-HP

Max. Stroke: 280 mm
Peak Force: 67 N

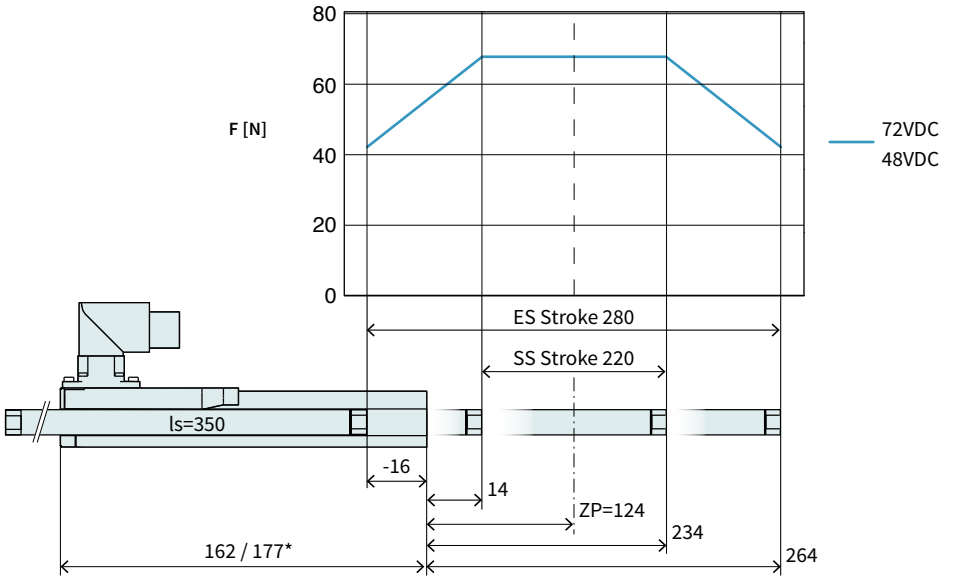

Dimensions in mm
*Cable Type

Technical Data P01-23x80F/220x280-HP				
Stroke				
Standard Stroke (SS)	mm	(in)	220	(8.65)
Extended Stroke (ES)	mm	(in)	280	(10.99)
Force				
Max. Force @ 48VDC	N	(lbf)	67.1	(15.1)
Max. Force @ 72VDC	N	(lbf)	67.1	(15.1)
Max. Cont. Force [Passive cooling/ Fan / Fluid]	N	(lbf)	14 / 23 / -	(3.2 / 5.3 / -)
Max. Border Force relative	%		63	
Force Constant	N/A_{pk}	(lbf/A_{pk})	8.95	(2.01)
Velocity				
Max. Velocity @ 48VDC	m/s	(in/s)	4.9	(189.9)
Max. Velocity @ 72VDC	m/s	(in/s)	7.3	(289.9)
Position Detection				
Repeatability	mm	(in)	±0.05	(±0.002)
Linearity	%		± 0.2	
Electrical Data				
Max. Current @ 48VDC	A_{pk}		7.4	
Max. Current @ 72VDC	A_{pk}		7.4	
Max. Cont. Current [Passive cooling /Fan / Fluid]	A_{pk}		1.6 / 2.6 / -	
Thermal Data				
Max. Winding Temperature (Sensor)	°C		120	
Thermal Resistance [Passive cooling / Fan / Fluid]	°K/W		5.4 / 2 / -	
Thermal Time Constant [Passive cooling / Fan / Fluid]	s		650 / 240 / -	
Mechanical Data				
Slider Length	mm	(in)	350	(14)
Slider Mass	g	(lb)	280	(0.62)

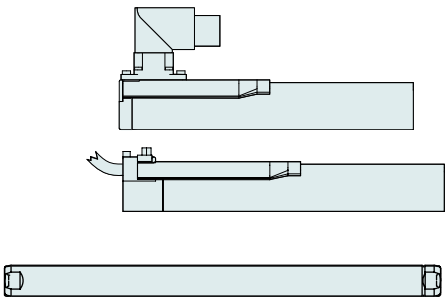

Item	Description	Item-No.
PS01-23x80F-HP-R	Stator HP with IP67 Connector M17/9(m)	0150-1259
PS01-23x80F-HP-R20	Stator HP, 0.2m Cable, IP67 St. M17/9(m)	0150-1260
PL01-12x350/310-HP	Slider 'standard LC'	0150-1522
PL02-12x350/310-HP	Slider 'heavy duty LC'	0150-1555
PL01-12x350/310-HP-L*	Slider 'High Performance L'	0150-3691

* With this slider, the motor specifications above change.

P01-23x80F/290x350-HP

Max. Stroke: 350 mm
Peak Force: 67 N

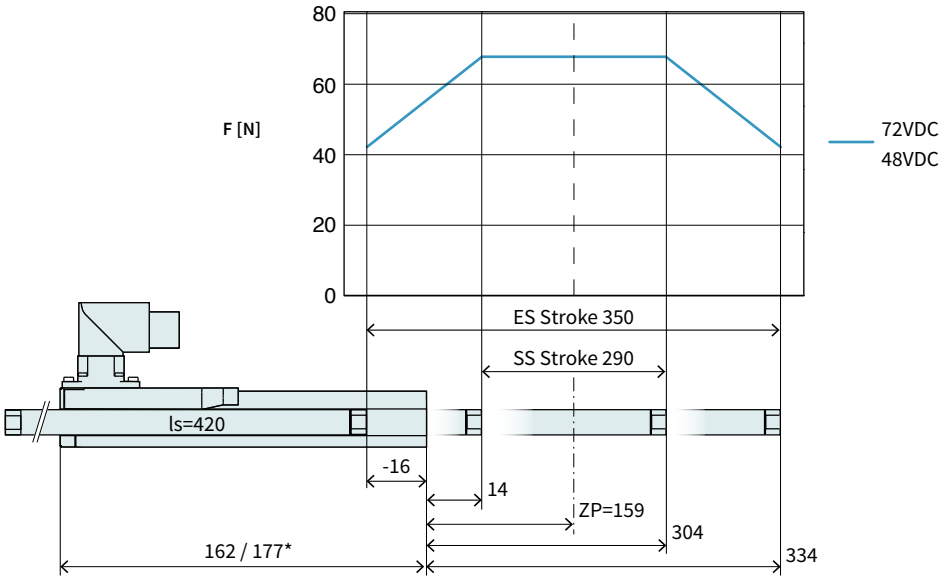

Dimensions in mm
*Cable Type

Technical Data P01-23x80F/290x350-HP				
Stroke				
Standard Stroke (SS)	mm	(in)	290	(11.4)
Extended Stroke (ES)	mm	(in)	350	(13.8)
Force				
Max. Force @ 48VDC	N	(lbf)	67.1	(15.1)
Max. Force @ 72VDC	N	(lbf)	67.1	(15.1)
Max. Cont. Force [Passive cooling/ Fan / Fluid]	N	(lbf)	14 / 23 / -	(3.2 / 5.3 / -)
Max. Border Force relative	%		63	
Force Constant	N/A_{pk}	(lbf/A_{pk})	8.95	(2.01)
Velocity				
Max. Velocity @ 48VDC	m/s	(in/s)	4.9	(189.9)
Max. Velocity @ 72VDC	m/s	(in/s)	7.3	(289.9)
Position Detection				
Repeatability	mm	(in)	±0.05	(±0.002)
Linearity	%		± 0.15	
Electrical Data				
Max. Current @ 48VDC	A_{pk}		7.4	
Max. Current @ 72VDC	A_{pk}		7.4	
Max. Cont. Current [Passive cooling /Fan / Fluid]	A_{pk}		1.6 / 2.6 / -	
Thermal Data				
Max. Winding Temperature (Sensor)	°C		120	
Thermal Resistance [Passive cooling / Fan / Fluid]	°K/W		5.4 / 2 / -	
Thermal Time Constant [Passive cooling / Fan / Fluid]	s		650 / 240 / -	
Mechanical Data				
Slider Length	mm	(in)	420	(17)
Slider Mass	g	(lb)	340	(0.75)

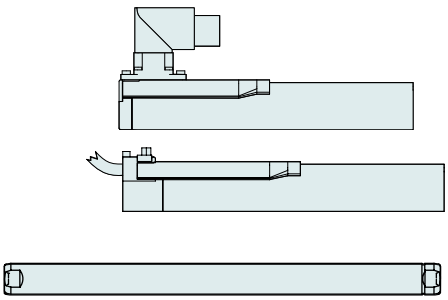

Item	Description	Item-No.
PS01-23x80F-HP-R	Stator HP with IP67 Connector M17/9(m)	0150-1259
PS01-23x80F-HP-R20	Stator HP, 0.2m Cable, IP67 St. M17/9(m)	0150-1260
PL01-12x420/380-HP	Slider 'High Performance'	0150-1523
PL02-12x420/380-HP	Slider 'heavy duty' 'High Performance	0150-1554
PL01-12x420/380-HP-L*	Slider 'High Performance L'	0150-3692

* With this slider, the motor specifications above change.

P01-23x80F/350x410-HP

Max. Stroke: 410 mm
Peak Force: 67 N

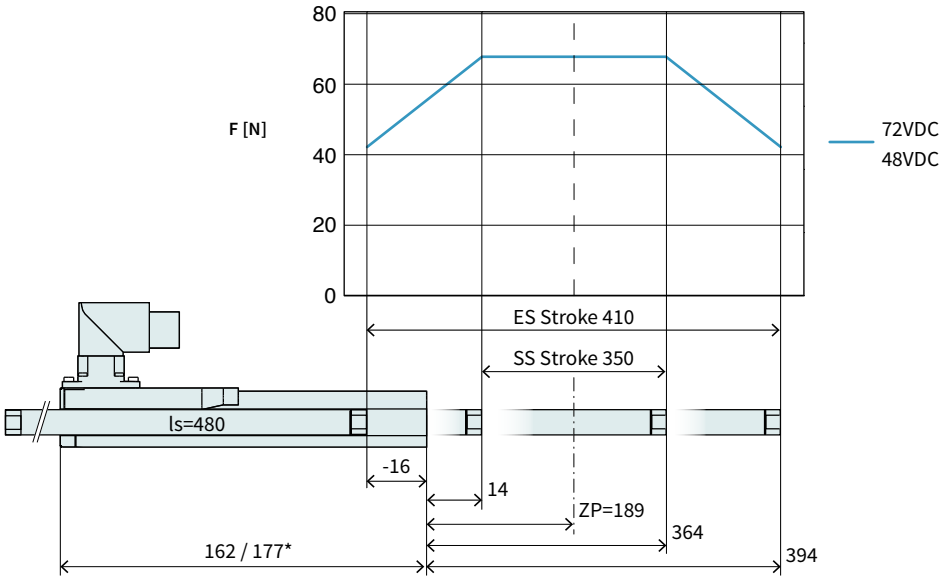

Dimensions in mm
*Cable Type

Technical Data P01-23x80F/350x410-HP				
Stroke				
Standard Stroke (SS)	mm	(in)	350	(13.8)
Extended Stroke (ES)	mm	(in)	410	(16.1)
Force				
Max. Force @ 48VDC	N	(lbf)	67.1	(15.1)
Max. Force @ 72VDC	N	(lbf)	67.1	(15.1)
Max. Cont. Force [Passive cooling/ Fan / Fluid]	N	(lbf)	14 / 23 / -	(3.2 / 5.3 / -)
Max. Border Force relative	%		63	
Force Constant	N/A_{pk}	(lbf/A_{pk})	8.95	(2.01)
Velocity				
Max. Velocity @ 48VDC	m/s	(in/s)	4.9	(189.9)
Max. Velocity @ 72VDC	m/s	(in/s)	7.3	(289.9)
Position Detection				
Repeatability	mm	(in)	±0.05	(±0.002)
Linearity	%		± 0.15	
Electrical Data				
Max. Current @ 48VDC	A_{pk}		7.4	
Max. Current @ 72VDC	A_{pk}		7.4	
Max. Cont. Current [Passive cooling /Fan / Fluid]	A_{pk}		1.6 / 2.6 / -	
Thermal Data				
Max. Winding Temperature (Sensor)	°C		120	
Thermal Resistance [Passive cooling / Fan / Fluid]	°K/W		5.4 / 2 / -	
Thermal Time Constant [Passive cooling / Fan / Fluid]	s		650 / 240 / -	
Mechanical Data				
Slider Length	mm	(in)	480	(19)
Slider Mass	g	(lb)	390	(0.86)

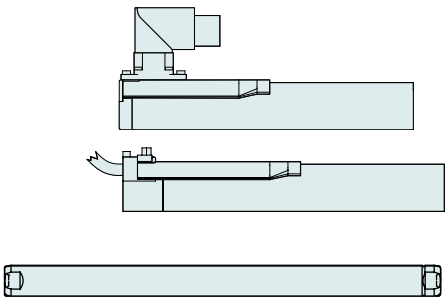

Item	Description	Item-No.
PS01-23x80F-HP-R	Stator HP with IP67 Connector M17/9(m)	0150-1259
PS01-23x80F-HP-R20	Stator HP, 0.2m Cable, IP67 St. M17/9(m)	0150-1260
PL01-12x480/440-HP	Slider 'standard LC'	0150-1524
PL02-12x480/440-HP	Slider 'heavy duty LC'	0150-2519
PL01-12x480/440-HP-L*	Slider 'High Performance L'	0150-3693

* With this slider, the motor specifications above change.

P01-23x80F/450x510-HP

Max. Stroke: 510 mm
Peak Force: 67 N

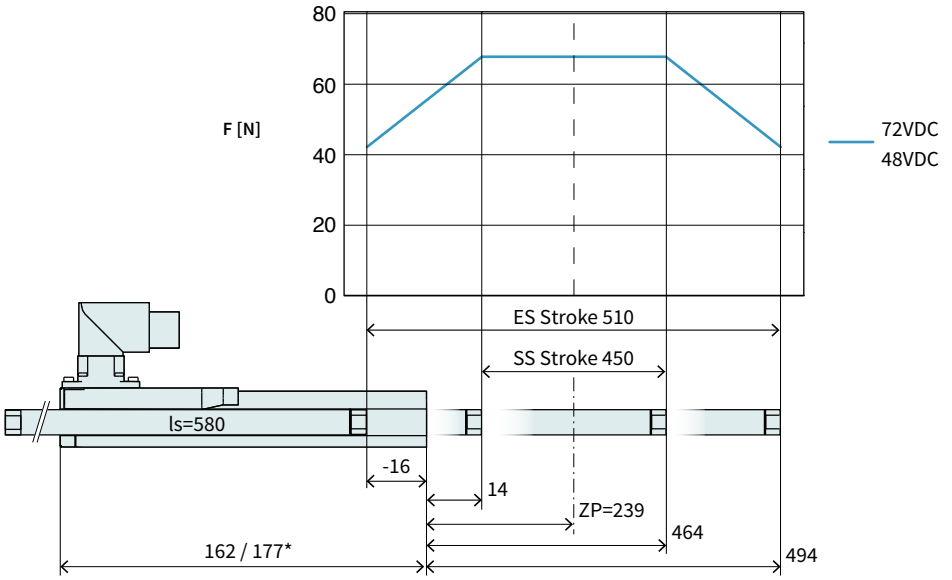

Dimensions in mm
*Cable Type

Technical Data P01-23x80F/450x510-HP				
Stroke				
Standard Stroke (SS)	mm	(in)	450	(17.69)
Extended Stroke (ES)	mm	(in)	510	(20.1)
Force				
Max. Force @ 48VDC	N	(lbf)	67.1	(15.1)
Max. Force @ 72VDC	N	(lbf)	67.1	(15.1)
Max. Cont. Force [Passive cooling/ Fan / Fluid]	N	(lbf)	14 / 23 / -	(3.2 / 5.3 / -)
Max. Border Force relative	%		63	
Force Constant	N/A_{pk}	(lbf/A_{pk})	8.95	(2.01)
Velocity				
Max. Velocity @ 48VDC	m/s	(in/s)	4.9	(189.9)
Max. Velocity @ 72VDC	m/s	(in/s)	7.3	(289.9)
Position Detection				
Repeatability	mm	(in)	±0.05	(±0.002)
Linearity	%		± 0.15	
Electrical Data				
Max. Current @ 48VDC	A_{pk}		7.4	
Max. Current @ 72VDC	A_{pk}		7.4	
Max. Cont. Current [Passive cooling /Fan / Fluid]	A_{pk}		1.6 / 2.6 / -	
Thermal Data				
Max. Winding Temperature (Sensor)	°C		120	
Thermal Resistance [Passive cooling / Fan / Fluid]	°K/W		5.4 / 2 / -	
Thermal Time Constant [Passive cooling / Fan / Fluid]	s		650 / 240 / -	
Mechanical Data				
Slider Length	mm	(in)	580	(23)
Slider Mass	g	(lb)	480	(1.06)

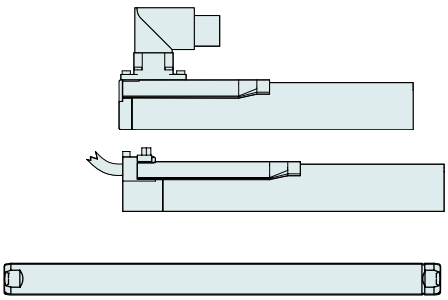

Item	Description	Item-No.
PS01-23x80F-HP-R	Stator HP with IP67 Connector M17/9(m)	0150-1259
PS01-23x80F-HP-R20	Stator HP, 0.2m Cable, IP67 St. M17/9(m)	0150-1260
PL01-12x580/540-HP	Slider 'High Performance'	0150-1525
PL02-12x580/540-HP	Slider 'heavy duty' 'High Performance	0150-2520
PL01-12x580/540-HP-L*	Slider 'High Performance L'	0150-3694

* With this slider, the motor specifications above change.

P01-23x80F/630x690-HP

Max. Stroke: 690 mm
Peak Force: 67 N

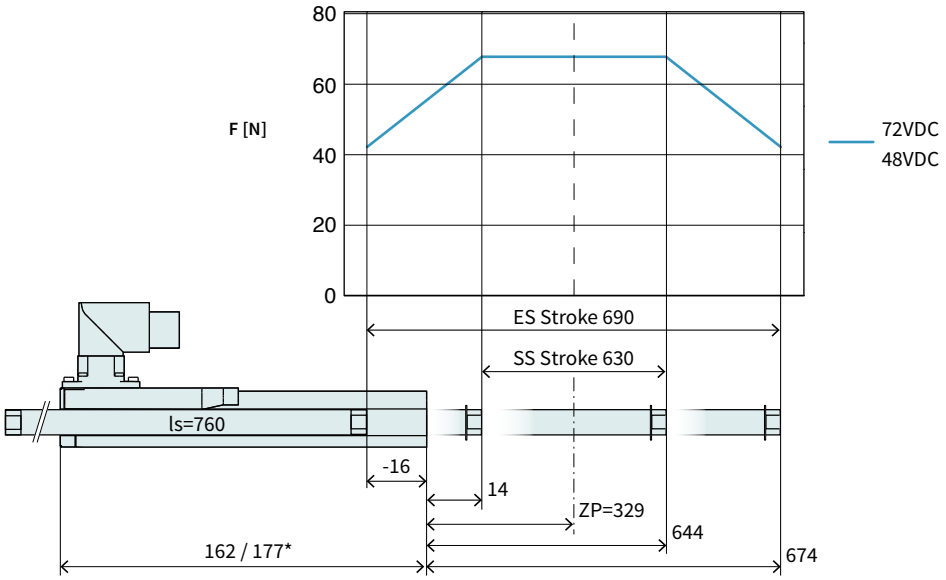

Dimensions in mm
*Cable Type

Technical Data P01-23x80F/630x690-HP				
Stroke				
Standard Stroke (SS)	mm	(in)	630	(24.8)
Extended Stroke (ES)	mm	(in)	690	(27.19)
Force				
Max. Force @ 48VDC	N	(lbf)	67.1	(15.1)
Max. Force @ 72VDC	N	(lbf)	67.1	(15.1)
Max. Cont. Force [Passive cooling/ Fan / Fluid]	N	(lbf)	14 / 23 / -	(3.2 / 5.3 / -)
Max. Border Force relative	%		63	
Force Constant	N/A_{pk}	(lbf/A_{pk})	8.95	(2.01)
Velocity				
Max. Velocity @ 48VDC	m/s	(in/s)	4.9	(189.9)
Max. Velocity @ 72VDC	m/s	(in/s)	7.3	(289.9)
Position Detection				
Repeatability	mm	(in)	±0.05	(±0.002)
Linearity	%		± 0.15	
Electrical Data				
Max. Current @ 48VDC	A_{pk}		7.4	
Max. Current @ 72VDC	A_{pk}		7.4	
Max. Cont. Current [Passive cooling /Fan / Fluid]	A_{pk}		1.6 / 2.6 / -	
Thermal Data				
Max. Winding Temperature (Sensor)	°C		120	
Thermal Resistance [Passive cooling / Fan / Fluid]	°K/W		5.4 / 2 / -	
Thermal Time Constant [Passive cooling / Fan / Fluid]	s		650 / 240 / -	
Mechanical Data				
Slider Length	mm	(in)	760	(30)
Slider Mass	g	(lb)	630	(1.4)

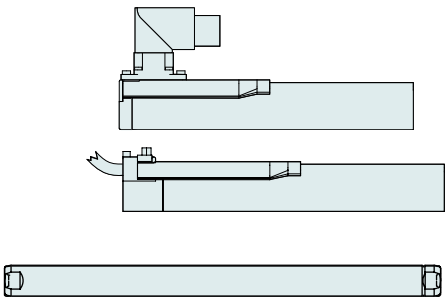

Item	Description	Item-No.
PS01-23x80F-HP-R	Stator HP with IP67 Connector M17/9(m)	0150-1259
PS01-23x80F-HP-R20	Stator HP, 0.2m Cable, IP67 St. M17/9(m)	0150-1260
PL01-12x760/720-HP	Slider 'standard LC'	0150-1526
PL02-12x760/720-HP	Slider 'heavy duty LC'	0150-2521
PL01-12x760/720-HP-L*	Slider 'High Performance L'	0150-3695

* With this slider, the motor specifications above change.

P01-23x80F/720x780-HP

Max. Stroke: 780 mm
Peak Force: 67 N

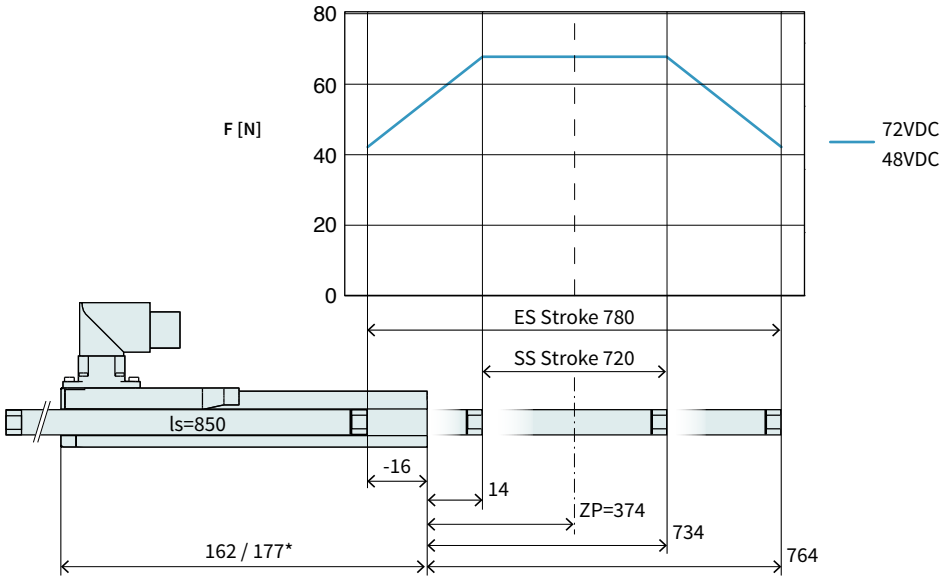

Dimensions in mm
*Cable Type

Technical Data P01-23x80F/720x780-HP				
Stroke				
Standard Stroke (SS)	mm	(in)	720	(28.3)
Extended Stroke (ES)	mm	(in)	780	(30.69)
Force				
Max. Force @ 48VDC	N	(lbf)	67.1	(15.1)
Max. Force @ 72VDC	N	(lbf)	67.1	(15.1)
Max. Cont. Force [Passive cooling/ Fan / Fluid]	N	(lbf)	14 / 23 / -	(3.2 / 5.3 / -)
Max. Border Force relative	%		63	
Force Constant	N/A_{pk}	(lbf/A_{pk})	8.95	(2.01)
Velocity				
Max. Velocity @ 48VDC	m/s	(in/s)	4.9	(189.9)
Max. Velocity @ 72VDC	m/s	(in/s)	7.3	(289.9)
Position Detection				
Repeatability	mm	(in)	±0.05	(±0.002)
Linearity	%		± 0.15	
Electrical Data				
Max. Current @ 48VDC	A_{pk}		7.4	
Max. Current @ 72VDC	A_{pk}		7.4	
Max. Cont. Current [Passive cooling /Fan / Fluid]	A_{pk}		1.6 / 2.6 / -	
Thermal Data				
Max. Winding Temperature (Sensor)	°C		120	
Thermal Resistance [Passive cooling / Fan / Fluid]	°K/W		5.4 / 2 / -	
Thermal Time Constant [Passive cooling / Fan / Fluid]	s		650 / 240 / -	
Mechanical Data				
Slider Length	mm	(in)	850	(33)
Slider Mass	g	(lb)	700	(1.5)

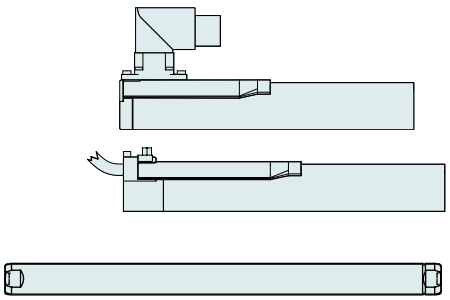

Item	Description	Item-No.
PS01-23x80F-HP-R	Stator HP with IP67 Connector M17/9(m)	0150-1259
PS01-23x80F-HP-R20	Stator HP, 0.2m Cable, IP67 St. M17/9(m)	0150-1260
PL01-12x850/810-HP	Slider 'High Performance'	0150-1527
PL02-12x850/810-HP	Slider 'heavy duty' 'High Performance	0150-2516
PL01-12x850/810-HP-L*	Slider 'High Performance L'	on request

* With this slider, the motor specifications above change.

Linear Guides H01



HM01-23x80/60	Linear Module 23x80 with 60 mm Stroke		
H-Guide	H01-23x86/60	H-Guide for P01-23x80, Stroke max 60mm	0150-5014
	H01-23x86/60-GF	H-Guide for P01-23x80, Stroke max 60mm	0150-5074
Stator	PS01-23x80F-HP-R	Stator HP with IP67 Connector M17/9(m)	0150-1259
	PS01-23x80F-HP-R20	Stator HP, 0.2m Cable, IP67 St. M17/9(m)	0150-1260
Slider	PL01-12x200/160-HP	Slider 'High Performance'	0150-1518

HM01-23x80/160	Linear Module 23x80 with 160 mm Stroke		
H-Guide	H01-23x86/160	H-Guide for P01-23x80, Stroke max 160mm	0150-5015
	H01-23x86/160-GF	H-Guide for P01-23x80, Stroke max 160mm	0150-5075
Stator	PS01-23x80F-HP-R	Stator HP with IP67 Connector M17/9(m)	0150-1259
	PS01-23x80F-HP-R20	Stator HP, 0.2m Cable, IP67 St. M17/9(m)	0150-1260
Slider	PL01-12x290/250-HP	Slider 'standard LC'	0150-1521

HM01-23x80/260	Linear Module 23x80 with 260 mm Stroke		
H-Guide	H01-23x86/260	H-Guide for P01-23x80, Stroke max 260mm	0150-5016
	H01-23x86/260-GF	H-Guide for P01-23x80, Stroke max 260mm	0150-5076
Stator	PS01-23x80F-HP-R	Stator HP with IP67 Connector M17/9(m)	0150-1259
	PS01-23x80F-HP-R20	Stator HP, 0.2m Cable, IP67 St. M17/9(m)	0150-1260
Slider	PL01-12x420/380-HP	Slider 'High Performance'	0150-1523

Accessories			
Fan	HV01-23	Fan cooling for H01-23	0150-5050
MagSpring	MF01-20/H23	Flange MagSpring 20 / H-Guide 23	0250-2306
	MA01-20/H23	Flange MagSpring 20 / H-Guide 23	0250-0116
Centering sleeve	HC01-09/04	Centering sleeve D9x4 mm	0150-3251

FIND MORE PRODUCT DETAILS IN THE CHAPTER "LINEAR GUIDES".

Motor Cable

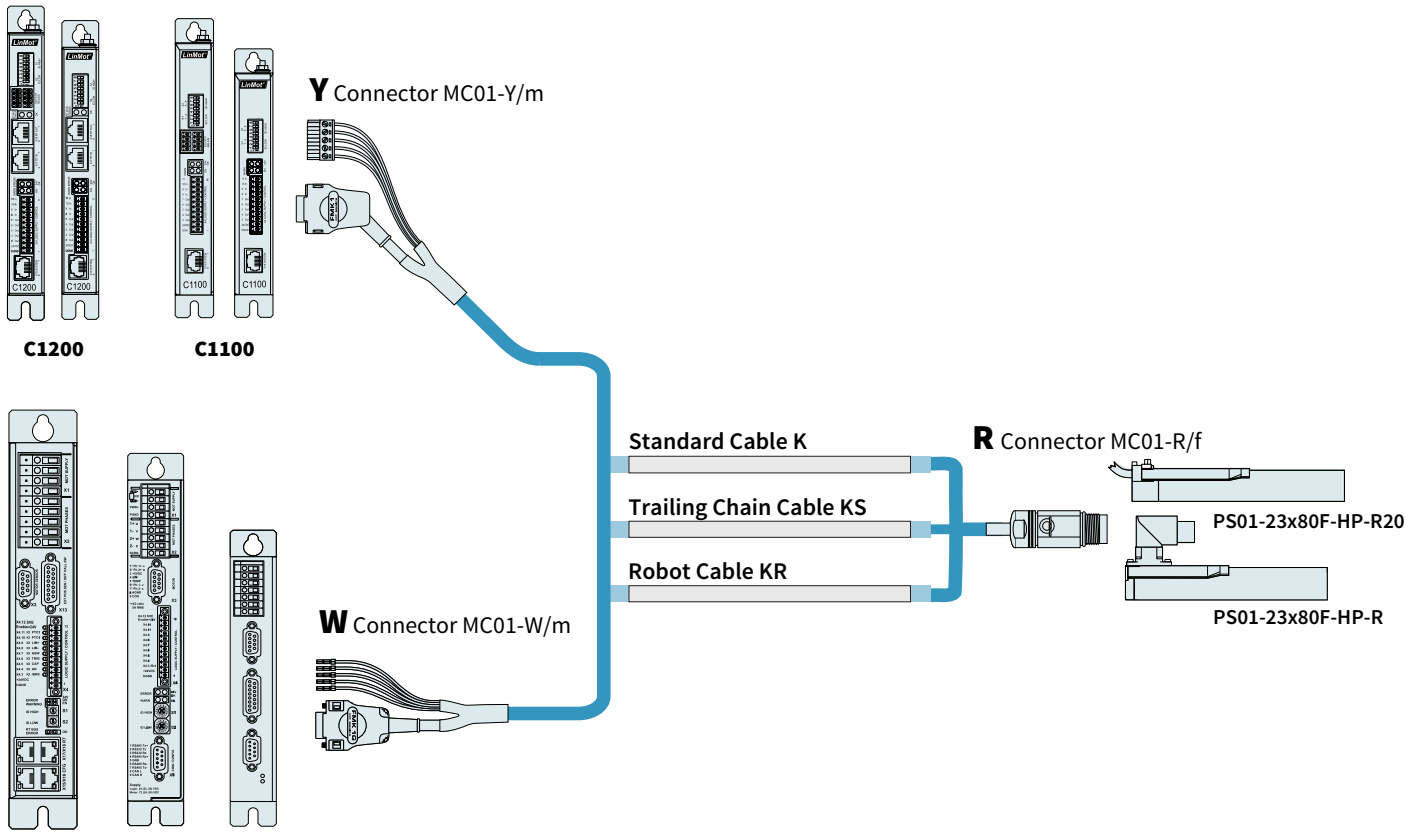

ORDERING INFORMATION

STANDARD CABLE		
Item	**Description**	**Item-No.**
K05-W/R-2	Motor Cable W/R, 2 m	0150-2119
K05-W/R-4	Motor Cable W/R, 4 m	0150-2120
K05-W/R-6	Motor Cable W/R, 6 m	0150-2121
K05-W/R-8	Motor Cable W/R, 8 m	0150-2122
K05-W/R-	Motor Cable W/R, Custom length	0150-3262
K05-Y/R-2	Motor Cable Y/R, 2 m	0150-2421
K05-Y/R-4	Motor Cable Y/R, 4 m	0150-2422
K05-Y/R-6	Motor Cable Y/R, 6 m	0150-2423
K05-Y/R-8	Motor Cable Y/R, 8 m	0150-2424
K05-Y-Fe/R-	Motor Cable Y/R, Custom length	0150-3501

TRAILING CHAIN CABLE		
Item	**Description**	**Item-No.**
KS05-W/R-4	Trailing Chain Cable W/R, 4 m	0150-2106
KS05-W/R-6	Trailing Chain Cable W/R, 6 m	0150-2131
KS05-W/R-8	Trailing Chain Cable W/R, 8 m	0150-2107
KS05-W/R-	Trailing Chain Cable W/R, Custom length	0150-3256
KS05-Y/R-4	Trailing Chain Cable Y/R, 4 m	0150-2433
KS05-Y/R-6	Trailing Chain Cable Y/R, 6 m	0150-2434
KS05-Y/R-8	Trailing Chain Cable Y/R, 8 m	0150-2435
KS05-Y/R-	Trailing Chain Cable Y/R, Custom length	0150-3507

ROBOT CABLE		
Item	**Description**	**Item-No.**
KR05-W/R-	Robot Cable KR05-W/R, Custom length	0150-3336
KR05-Y-Fe/R-	Robot Cable KR05-Y-Fe/R, Custom length	0150-3512

CONNECTOR & CABLE (INDIVIDUAL)		
Item	**Description**	**Item-No.**
MC01-W/m	Motor Connector W/m	0150-3140
MC01-Y-Fe/m	Motor Connector Y-Fe/m	0150-3289
MC01-R/f	Motor Connector R/f	0150-3129
K05-04/05	Motor Cable per m	0150-1920
KS05-04/05	Trailing Chain Cable per m	0150-1938
KR05-04/05	Robot Cable per m	0150-1846

MOTOR FLANGES



Item	Description	Item-No.
PF02-23x50	Flange 23x50 mm	0150-2102
PF02-23x90	Flange 23x90 mm	0150-2146

FIND MORE PRODUCT DETAILS IN THE CHAPTER "ACCESSORIES".

FANS



Item	Description	Item-No.
HV01-23	Fan cooling for H01-23 and PF02-23	0150-5050

FIND MORE PRODUCT DETAILS IN THE CHAPTER "ACCESSORIES".

SLIDER MOUNTING





Item	Description	Item-No.
PLF01-12	Fixed End Washer Set for 12 mm sliders	0150-3085
PLF01-12-Ni	Fixed End Washer Set for 12 mm sliders nickel-plated	0150-3573
PLL02-12	Floating support for PL01-12 Sliders	0150-3111

FIND MORE PRODUCT DETAILS IN THE CHAPTER "ACCESSORIES".

WIPERS



Item	Description	Item-No.
PA01-23/12-F	Seal front side for PS01-23x...	0150-3125

FIND MORE PRODUCT DETAILS IN THE CHAPTER "ACCESSORIES".

EXTERNAL POSITION SENSORS



Item	Description	Item-No.
MS01-1/D	Linear Encoder 1 µm, A/B (for incremental strip)	0150-1840
MB01-1000	Magnetic incremental strip for MS01-1/D, per cm	0150-1963
KS025-D/D-Encoder	Encoder Cable (Length in m)	0150-3166
KS025-D/D15-Encoder	Encoder Cable (Length in m)	0150-3168

FIND MORE PRODUCT DETAILS IN THE CHAPTER "ACCESSORIES".



Item	Description	Item-No.
MS01-1/D-SSI	Linear Encoder 1 µm,, A/B (for absolute strip)	0150-2095
MB01-1000-ABS	Magnetic absolute strip for MS01-1/D-SSI (per cm)	0150-2096
EC01-ABS/ENC-12-S	MS01-1/D-SSI Encoder connector straight	0150-3616
KSS01-12-D15/ABS-ENC	Special cable for MS01-1/D-SSI on C1100/C1200/C1400/E1200/E1400 Drives	0150-3652

FIND MORE PRODUCT DETAILS IN THE CHAPTER "ACCESSORIES".

LINEAR MOTORS P02-23Sx80

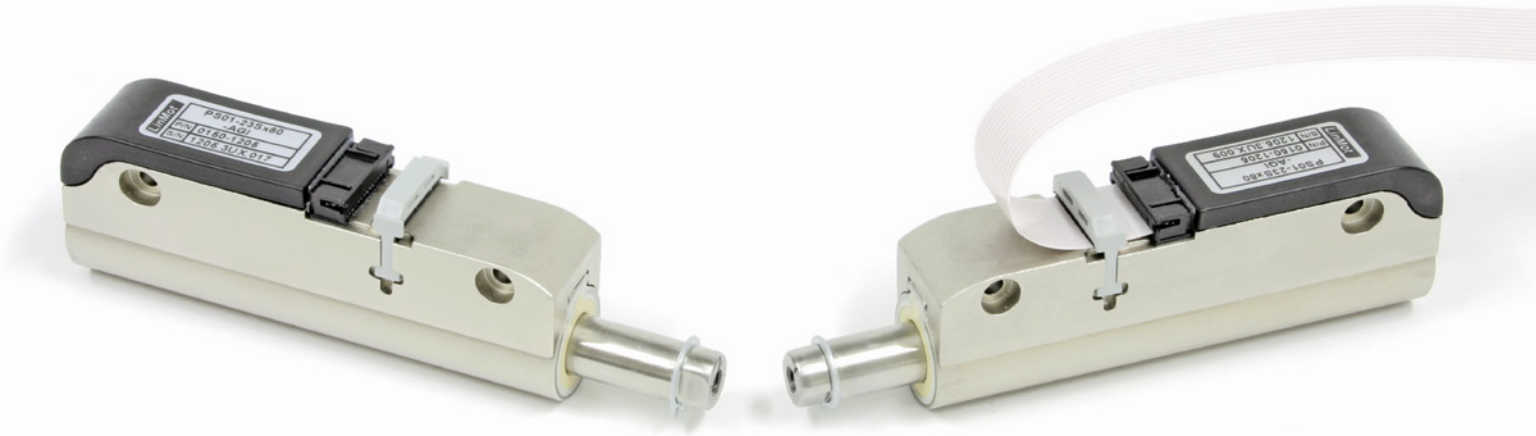

- Short design
- Integrated mounting flange
- Pluggable motor cable with cover
- For use where space is limited and in multi-axis applications

LINEAR MOTORS P02-23Sx80

Technical Data **75**

Motor Specifications

P02-23Sx80/0x60-LC **78**

P02-23Sx80/40x100-LC **79**

P02-23Sx80/60x120-LC **80**

P02-23Sx80/100x160-LC **81**

P02-23Sx80/160x220-LC **82**

P02-23Sx80/220x280-LC **83**

P02-23Sx80/290x350-LC **84**

P02-23Sx80/350x410-LC **85**

P02-23Sx80/450x510-LC **86**

P02-23Sx80/630x690-LC **87**

P02-23Sx80/720x780-LC **88**

Accessories **89**



MOTOR FAMILY P02-23Sx80

Technical Data				
Stroke				
Standard Stroke (SS)	mm	(in)	≤ 720	(≤ 28.3)
Extended Stroke (ES)	mm	(in)	≤ 780	(≤ 30.69)
Force				
Max. Force @ 48VDC	N	(lbf)	41.6	(9.35)
Max. Force @ 72VDC	N	(lbf)	44	(9.89)
Max. Cont. Force [Passive cooling/ Fan / Fluid]	N	(lbf)	8.6 / 16 / -	(1.9 / 3.5 / -)
Max. Border Force relative	%		≤ 63	
Force Constant	N/A_{pk}	(lbf/A_{pk})	11	(2.47)
Velocity				
Max. Velocity @ 48VDC	m/s	(in/s)	3.9	(159.9)
Max. Velocity @ 72VDC	m/s	(in/s)	5.9	(239.9)
Position Detection				
Position Resolution	mm	(in)	0.002	(0.0001)
Repeatability	mm	(in)	±0.05	(±0.002)
Position Resolution with ES	mm	(in)	0.001	(0.00004)
Repeatability with ES	mm	(in)	±0.01	(±0.0004)
Linearity with ES	mm	(in)	±0.01	(±0.0004)
Electrical Data				
Max. Current @ 48VDC	A_{pk}		3.7	
Max. Current @ 72VDC	A_{pk}		3.9	
Max. Cont. Current [Passive cooling /Fan / Fluid]	A_{pk}		0.78 / 1.4 / -	
Terminal Resistance 25 °C / 120 °C	Ohm		10 / 14	
Terminal Inductivity	mH		1.4	
Magnetic Period	mm	(in)	20	(0.78)
Thermal Data				
Max. Winding Temperature (Sensor)	°C		90	
Thermal Resistance [Passive cooling / Fan / Fluid]	°K/W		6.4 / 1.9 / -	
Thermal Time Constant [Passive cooling / Fan / Fluid]	s		830 / 250 / -	
Mechanical Data				
Stator Diameter	mm	(in)	23	(0.91)
Stator Length [Connector type / Cable type]	mm	(in)	105	(4.1)
Stator Mass	g	(lb)	245	(0.54)
Slider Diameter	mm	(in)	12	(0.47)
Slider Length	mm	(in)	130 - 850	(5.1 - 33)
Slider Mass	g	(lb)	90 - 700	(0.2 - 1.54)
IP Code			IP 50	

STATOR

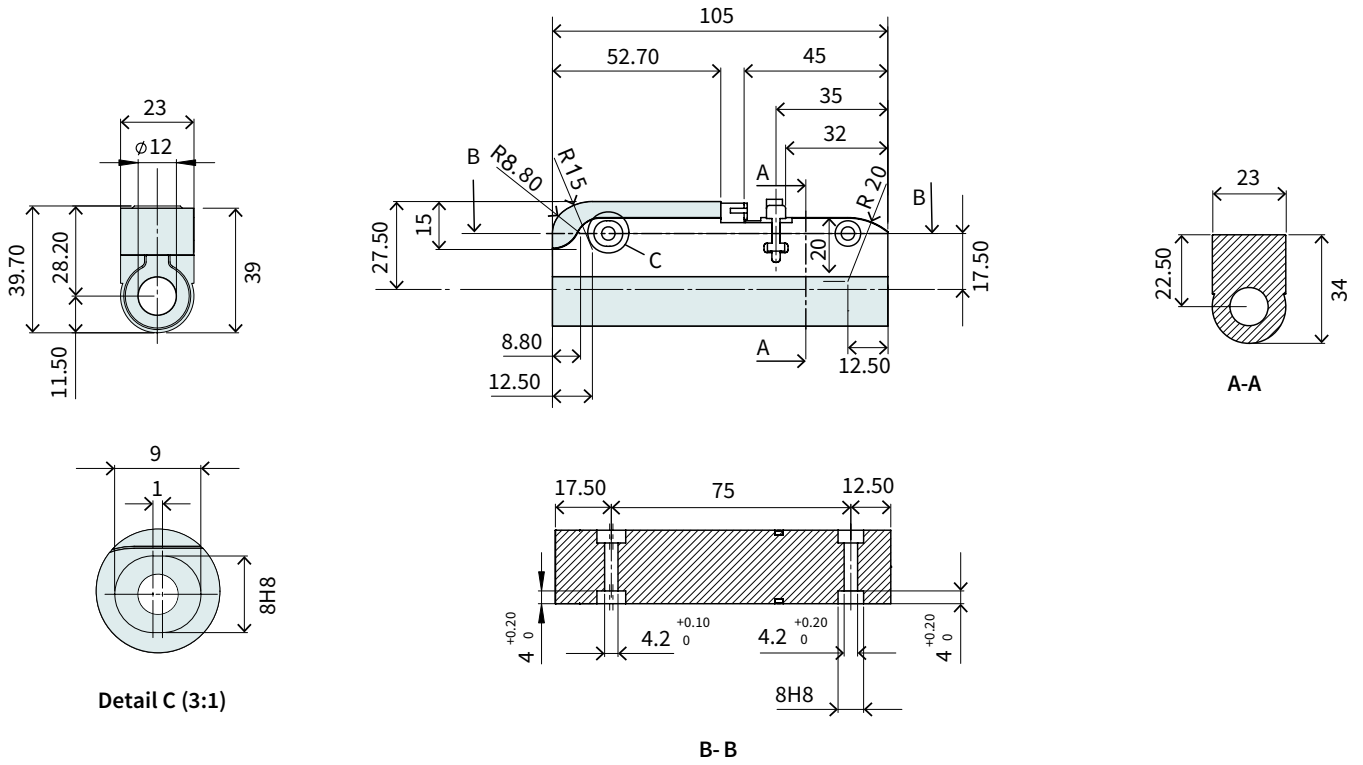

Item	Description	Item-No.
PS02-23Sx80-F	Stator with Flat cable connector 13 Pin	0150-1272

CONNECTOR

Motor Connector Wiring	
Pin 1	Phase 2-
Pin 2	Phase 2-
Pin 3	Phase 1-
Pin 4	Phase 1-
Pin 5	+5V
Pin 6	Temp
Pin 7	GND
Pin 8	Cos
Pin 9	Sin
Pin 10	Phase 2+
Pin 11	Phase 2+
Pin 12	Phase 1+
Pin 13	Phase 1+

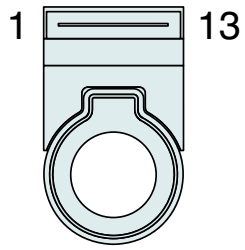

View: Motor Connector, plug side

SLIDER

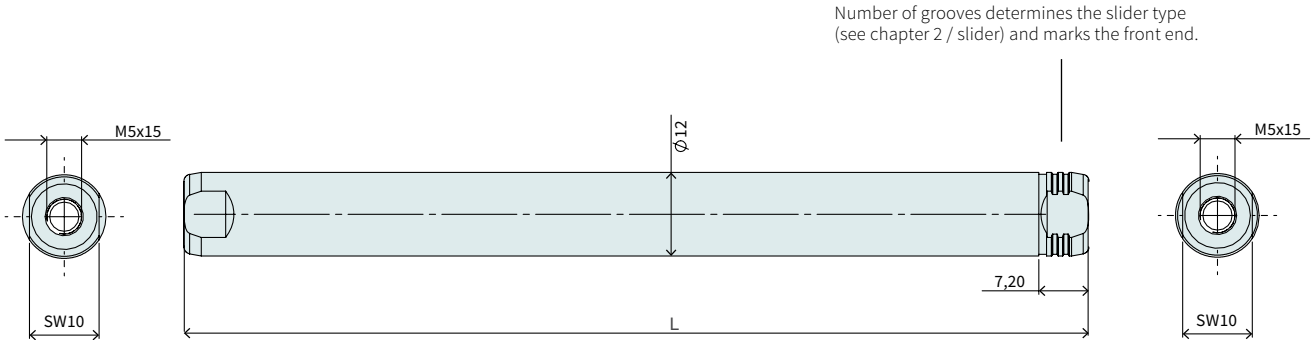

Slider Standard				
Item	Description	Max. Stroke [mm]	Standard Stroke [mm]	Item-No.
PL01-12x130/90-LC	Slider 'standard LC'	60	0	0150-2580
PL01-12x170/130-LC	Slider 'standard LC'	100	40	0150-2581
PL01-12x190/150-LC	Slider 'standard LC'	120	60	0150-2582
PL01-12x230/190-LC	Slider 'standard LC'	160	100	0150-2598
PL01-12x290/250-LC	Slider 'standard LC'	220	160	0150-2583
PL01-12x350/310-LC	Slider 'standard LC'	280	220	0150-2584
PL01-12x420/380-LC	Slider 'standard LC'	350	290	0150-2585
PL01-12x480/440-LC	Slider 'standard LC'	410	350	0150-2586
PL01-12x580/540-LC	Slider 'standard LC'	510	450	0150-2587
PL01-12x760/720-LC	Slider 'standard LC'	690	630	0150-2589
PL01-12x850/810-LC	Slider 'standard LC'	780	720	0150-2588

Slider Heavy Duty				
Item	Description	Max. Stroke [mm]	Standard Stroke [mm]	Item-No.
PL02-12x130/90-LC	Slider 'heavy duty LC'	60	0	0150-2590
PL02-12x170/130-LC	Slider 'heavy duty LC'	100	40	0150-2591
PL02-12x190/150-LC	Slider 'heavy duty LC'	120	60	0150-2592
PL02-12x230/190-LC	Slider 'heavy duty LC'	160	100	0150-2599
PL02-12x290/250-LC	Slider 'heavy duty LC'	220	160	0150-2593
PL02-12x350/310-LC	Slider 'heavy duty LC'	280	220	0150-2594
PL02-12x420/380-LC	Slider 'heavy duty LC'	350	290	0150-2595
PL02-12x480/440-LC	Slider 'heavy duty LC'	410	350	0150-2597
PL02-12x580/540-LC	Slider 'heavy duty LC'	510	450	0150-2596
PL02-12x760/720-LC	Slider 'heavy duty LC'	690	630	on request
PL02-12x850/810-LC	Slider 'heavy duty LC'	780	720	on request

P02-23Sx80/0x60-LC

Max. Stroke: 60 mm
Peak Force: 44 N

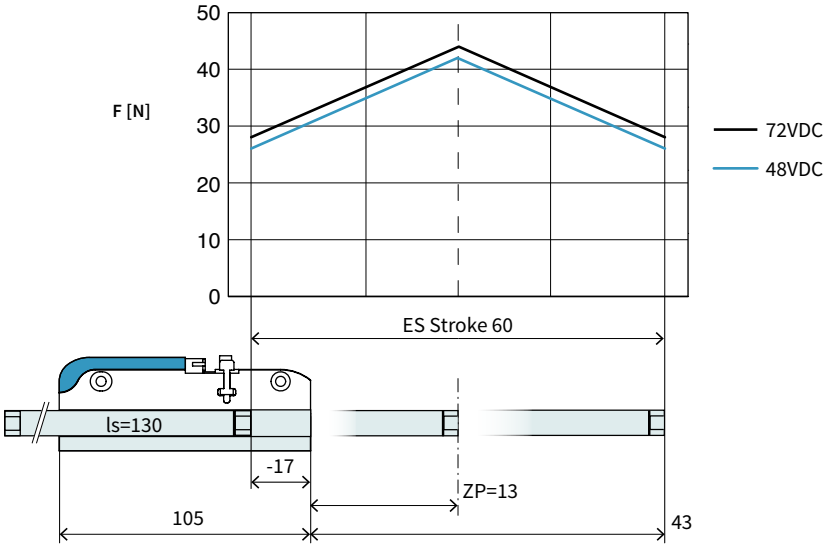

Dimensions in mm

Technical Data P02-23Sx80/0x60-LC				
Stroke				
Standard Stroke (SS)	mm	(in)	0	(0)
Extended Stroke (ES)	mm	(in)	60	(2.35)
Force				
Max. Force @ 48VDC	N	(lbf)	41.6	(9.35)
Max. Force @ 72VDC	N	(lbf)	44	(9.89)
Max. Cont. Force [Passive cooling/ Fan / Fluid]	N	(lbf)	8.6 / 16 / -	(1.9 / 3.5 / -)
Max. Border Force relative	%		63	
Force Constant	N/A_{pk}	(lbf/A_{pk})	11	(2.47)
Velocity				
Max. Velocity @ 48VDC	m/s	(in/s)	3.9	(159.9)
Max. Velocity @ 72VDC	m/s	(in/s)	5.9	(239.9)
Position Detection				
Repeatability	mm	(in)	±0.05	(±0.002)
Linearity	%		± 0.5	
Electrical Data				
Max. Current @ 48VDC	A_{pk}		3.7	
Max. Current @ 72VDC	A_{pk}		3.9	
Max. Cont. Current [Passive cooling /Fan / Fluid]	A_{pk}		0.78 / 1.4 / -	
Thermal Data				
Max. Winding Temperature (Sensor)	°C		90	
Thermal Resistance [Passive cooling / Fan / Fluid]	°K/W		6.4 / 1.9 / -	
Thermal Time Constant [Passive cooling / Fan / Fluid]	s		830 / 250 / -	
Mechanical Data				
Slider Length	mm	(in)	130	(5.1)
Slider Mass	g	(lb)	90	(0.2)

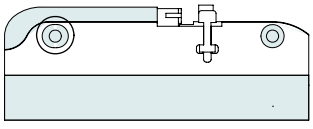



Item	Description	Item-No.
PS02-23Sx80-F	Stator with Flat cable connector 13 Pin	0150-1272

PL01-12x130/90-LC	Slider 'standard LC'	0150-2580
PL02-12x130/90-LC	Slider 'heavy duty LC'	0150-2590

P02-23Sx80/40x100-LC

Max. Stroke: 100 mm
Peak Force: 44 N

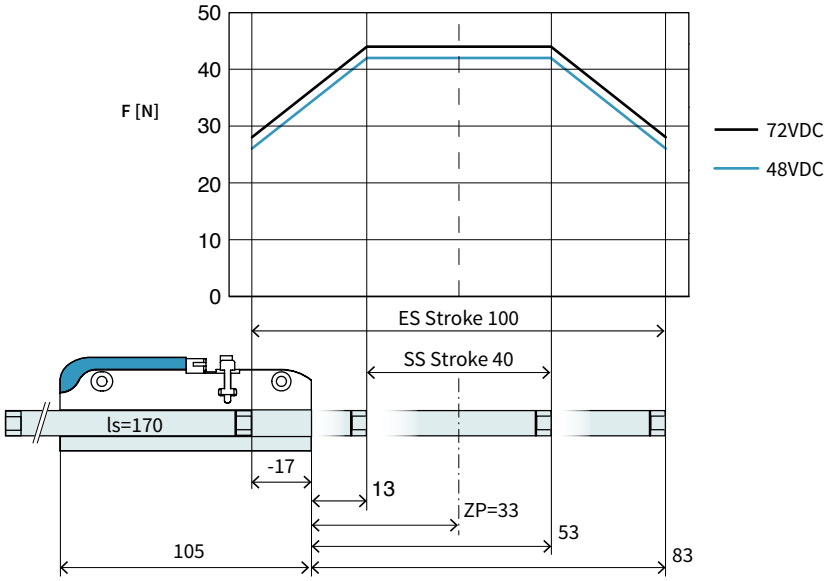

Dimensions in mm

Technical Data P02-23Sx80/40x100-LC				
Stroke				
Standard Stroke (SS)	mm	(in)	40	(1.57)
Extended Stroke (ES)	mm	(in)	100	(3.93)
Force				
Max. Force @ 48VDC	N	(lbf)	41.6	(9.35)
Max. Force @ 72VDC	N	(lbf)	44	(9.89)
Max. Cont. Force [Passive cooling/ Fan / Fluid]	N	(lbf)	8.6 / 16 / -	(1.9 / 3.5 / -)
Max. Border Force relative	%		63	
Force Constant	N/A_{pk}	(lbf/A_{pk})	11	(2.47)
Velocity				
Max. Velocity @ 48VDC	m/s	(in/s)	3.9	(159.9)
Max. Velocity @ 72VDC	m/s	(in/s)	5.9	(239.9)
Position Detection				
Repeatability	mm	(in)	±0.05	(±0.002)
Linearity	%		± 0.35	
Electrical Data				
Max. Current @ 48VDC	A_{pk}		3.7	
Max. Current @ 72VDC	A_{pk}		3.9	
Max. Cont. Current [Passive cooling /Fan / Fluid]	A_{pk}		0.78 / 1.4 / -	
Thermal Data				
Max. Winding Temperature (Sensor)	°C		90	
Thermal Resistance [Passive cooling / Fan / Fluid]	°K/W		6.4 / 1.9 / -	
Thermal Time Constant [Passive cooling / Fan / Fluid]	s		830 / 250 / -	
Mechanical Data				
Slider Length	mm	(in)	170	(6.7)
Slider Mass	g	(lb)	130	(0.29)

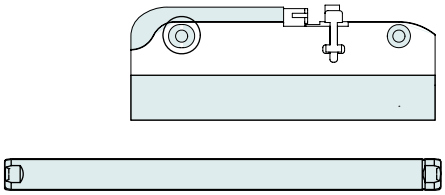

Item	Description	Item-No.
PS02-23Sx80-F	Stator with Flat cable connector 13 Pin	0150-1272

PL01-12x170/130-LC	Slider 'standard LC'	0150-2581
PL02-12x170/130-LC	Slider 'heavy duty LC'	0150-2591

P02-23Sx80/60x120-LC

Max. Stroke: 120 mm
Peak Force: 44 N

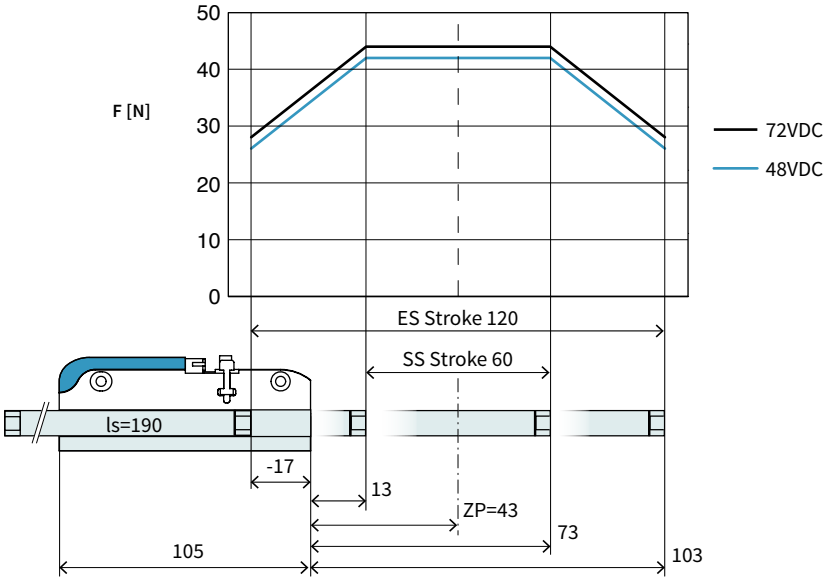

Dimensions in mm

Technical Data P02-23Sx80/60x120-LC				
Stroke				
Standard Stroke (SS)	mm	(in)	60	(2.35)
Extended Stroke (ES)	mm	(in)	120	(4.71)
Force				
Max. Force @ 48VDC	N	(lbf)	41.6	(9.35)
Max. Force @ 72VDC	N	(lbf)	44	(9.89)
Max. Cont. Force [Passive cooling/ Fan / Fluid]	N	(lbf)	8.6 / 16 / -	(1.9 / 3.5 / -)
Max. Border Force relative	%		63	
Force Constant	N/A_{pk}	(lbf/A_{pk})	11	(2.47)
Velocity				
Max. Velocity @ 48VDC	m/s	(in/s)	3.9	(159.9)
Max. Velocity @ 72VDC	m/s	(in/s)	5.9	(239.9)
Position Detection				
Repeatability	mm	(in)	±0.05	(±0.002)
Linearity	%		± 0.3	
Electrical Data				
Max. Current @ 48VDC	A_{pk}		3.7	
Max. Current @ 72VDC	A_{pk}		3.9	
Max. Cont. Current [Passive cooling /Fan / Fluid]	A_{pk}		0.78 / 1.4 / -	
Thermal Data				
Max. Winding Temperature (Sensor)	°C		90	
Thermal Resistance [Passive cooling / Fan / Fluid]	°K/W		6.4 / 1.9 / -	
Thermal Time Constant [Passive cooling / Fan / Fluid]	s		830 / 250 / -	
Mechanical Data				
Slider Length	mm	(in)	190	(7.5)
Slider Mass	g	(lb)	145	(0.32)

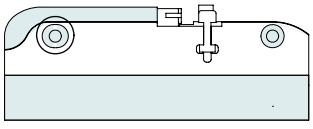



Item	Description	Item-No.
PS02-23Sx80-F	Stator with Flat cable connector 13 Pin	0150-1272

PL01-12x190/150-LC	Slider 'standard LC'	0150-2582
PL02-12x190/150-LC	Slider 'heavy duty LC'	0150-2592

P02-23Sx80/100x160-LC

Max. Stroke: 160 mm
Peak Force: 44 N

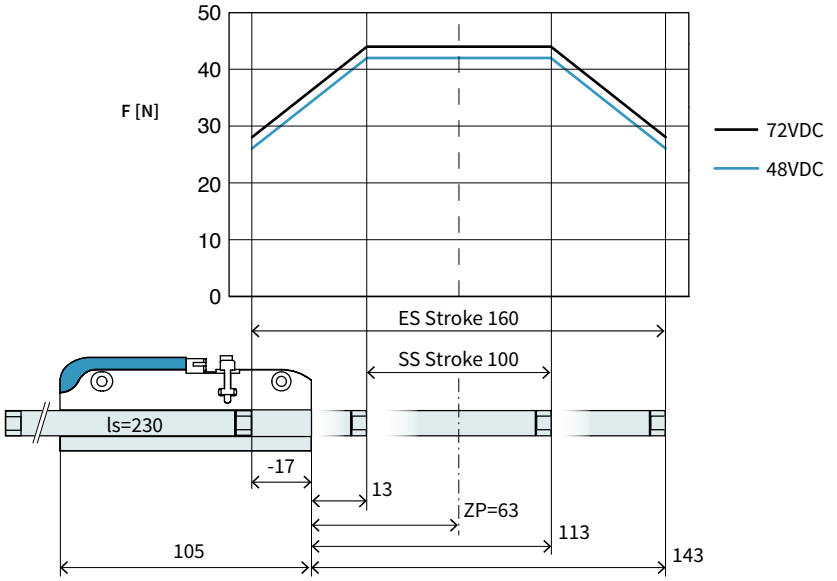

Dimensions in mm

Technical Data P02-23Sx80/100x160-LC				
Stroke				
Standard Stroke (SS)	mm	(in)	100	(3.93)
Extended Stroke (ES)	mm	(in)	160	(6.29)
Force				
Max. Force @ 48VDC	N	(lbf)	41.6	(9.35)
Max. Force @ 72VDC	N	(lbf)	44	(9.89)
Max. Cont. Force [Passive cooling/ Fan / Fluid]	N	(lbf)	8.6 / 16 / -	(1.9 / 3.5 / -)
Max. Border Force relative	%		63	
Force Constant	N/A_{pk}	(lbf/A_{pk})	11	(2.47)
Velocity				
Max. Velocity @ 48VDC	m/s	(in/s)	3.9	(159.9)
Max. Velocity @ 72VDC	m/s	(in/s)	5.9	(239.9)
Position Detection				
Repeatability	mm	(in)	±0.05	(±0.002)
Linearity	%		± 0.25	
Electrical Data				
Max. Current @ 48VDC	A_{pk}		3.7	
Max. Current @ 72VDC	A_{pk}		3.9	
Max. Cont. Current [Passive cooling /Fan / Fluid]	A_{pk}		0.78 / 1.4 / -	
Thermal Data				
Max. Winding Temperature (Sensor)	°C		90	
Thermal Resistance [Passive cooling / Fan / Fluid]	°K/W		6.4 / 1.9 / -	
Thermal Time Constant [Passive cooling / Fan / Fluid]	s		830 / 250 / -	
Mechanical Data				
Slider Length	mm	(in)	230	(9.1)
Slider Mass	g	(lb)	180	(0.4)

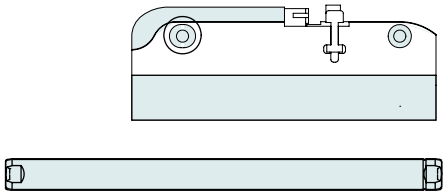

Item	Description	Item-No.
PS02-23Sx80-F	Stator with Flat cable connector 13 Pin	0150-1272

PL01-12x230/190-LC	Slider 'standard LC'	0150-2598
PL02-12x230/190-LC	Slider 'heavy duty LC'	0150-2599

P0S-23Sx80/160x220-LC

Max. Stroke: 220 mm
Peak Force: 44 N

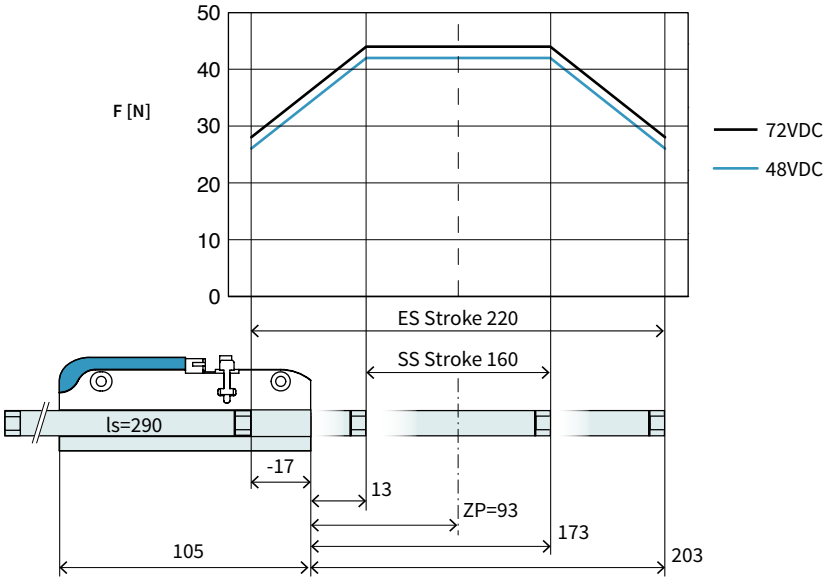

Dimensions in mm

Technical Data P02-23Sx80/160x220-LC				
Stroke				
Standard Stroke (SS)	mm	(in)	160	(6.29)
Extended Stroke (ES)	mm	(in)	220	(8.65)
Force				
Max. Force @ 48VDC	N	(lbf)	41.6	(9.35)
Max. Force @ 72VDC	N	(lbf)	44	(9.89)
Max. Cont. Force [Passive cooling/ Fan / Fluid]	N	(lbf)	8.6 / 16 / -	(1.9 / 3.5 / -)
Max. Border Force relative	%		63	
Force Constant	N/A_{pk}	(lbf/A_{pk})	11	(2.47)
Velocity				
Max. Velocity @ 48VDC	m/s	(in/s)	3.9	(159.9)
Max. Velocity @ 72VDC	m/s	(in/s)	5.9	(239.9)
Position Detection				
Repeatability	mm	(in)	±0.05	(±0.002)
Linearity	%		± 0.2	
Electrical Data				
Max. Current @ 48VDC	A_{pk}		3.7	
Max. Current @ 72VDC	A_{pk}		3.9	
Max. Cont. Current [Passive cooling /Fan / Fluid]	A_{pk}		0.78 / 1.4 / -	
Thermal Data				
Max. Winding Temperature (Sensor)	°C		90	
Thermal Resistance [Passive cooling / Fan / Fluid]	°K/W		6.4 / 1.9 / -	
Thermal Time Constant [Passive cooling / Fan / Fluid]	s		830 / 250 / -	
Mechanical Data				
Slider Length	mm	(in)	290	(11)
Slider Mass	g	(lb)	230	(0.51)

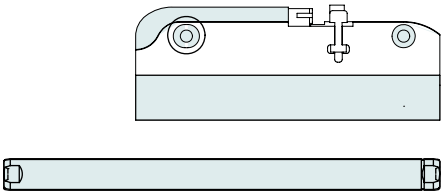

Item	Description	Item-No.
PS02-23Sx80-F	Stator with Flat cable connector 13 Pin	0150-1272

PL01-12x290/250-LC	Slider 'standard LC'	0150-2583
PL02-12x290/250-LC	Slider 'heavy duty LC'	0150-2593

P02-23Sx80/220x280-LC

Max. Stroke: 280 mm
Peak Force: 44 N

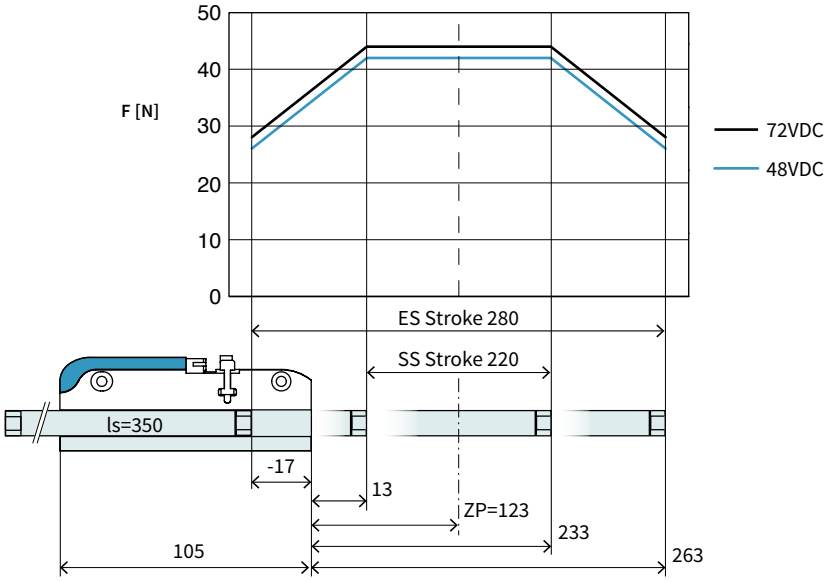

Dimensions in mm

Technical Data P02-23Sx80/220x280-LC				
Stroke				
Standard Stroke (SS)	mm	(in)	220	(8.65)
Extended Stroke (ES)	mm	(in)	280	(10.99)
Force				
Max. Force @ 48VDC	N	(lbf)	41.6	(9.35)
Max. Force @ 72VDC	N	(lbf)	44	(9.89)
Max. Cont. Force [Passive cooling/ Fan / Fluid]	N	(lbf)	8.6 / 16 / -	(1.9 / 3.5 / -)
Max. Border Force relative	%		63	
Force Constant	N/A_{pk}	(lbf/A_{pk})	11	(2.47)
Velocity				
Max. Velocity @ 48VDC	m/s	(in/s)	3.9	(159.9)
Max. Velocity @ 72VDC	m/s	(in/s)	5.9	(239.9)
Position Detection				
Repeatability	mm	(in)	±0.05	(±0.002)
Linearity	%		± 0.2	
Electrical Data				
Max. Current @ 48VDC	A_{pk}		3.7	
Max. Current @ 72VDC	A_{pk}		3.9	
Max. Cont. Current [Passive cooling /Fan / Fluid]	A_{pk}		0.78 / 1.4 / -	
Thermal Data				
Max. Winding Temperature (Sensor)	°C		90	
Thermal Resistance [Passive cooling / Fan / Fluid]	°K/W		6.4 / 1.9 / -	
Thermal Time Constant [Passive cooling / Fan / Fluid]	s		830 / 250 / -	
Mechanical Data				
Slider Length	mm	(in)	350	(14)
Slider Mass	g	(lb)	280	(0.62)

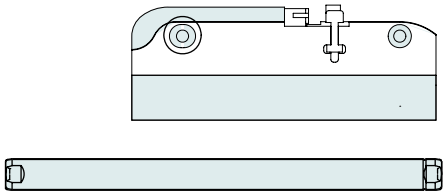

Item	Description	Item-No.
PS02-23Sx80-F	Stator with Flat cable connector 13 Pin	0150-1272

PL01-12x350/310-LC	Slider 'standard LC'	0150-2584
PL02-12x350/310-LC	Slider 'heavy duty LC'	0150-2594

P02-23Sx80/290x350-LC

Max. Stroke: 350 mm
Peak Force: 44 N

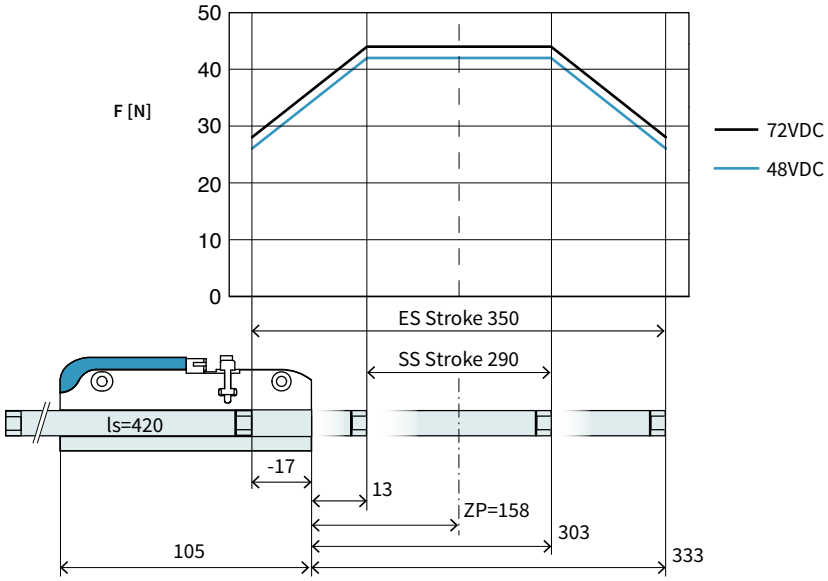

Dimensions in mm

Technical Data P02-23Sx80/290x350-LC				
Stroke				
Standard Stroke (SS)	mm	(in)	290	(11.4)
Extended Stroke (ES)	mm	(in)	350	(13.8)
Force				
Max. Force @ 48VDC	N	(lbf)	41.6	(9.35)
Max. Force @ 72VDC	N	(lbf)	44	(9.89)
Max. Cont. Force [Passive cooling/ Fan / Fluid]	N	(lbf)	8.6 / 16 / -	(1.9 / 3.5 / -)
Max. Border Force relative	%		63	
Force Constant	N/A_{pk}	(lbf/A_{pk})	11	(2.47)
Velocity				
Max. Velocity @ 48VDC	m/s	(in/s)	3.9	(159.9)
Max. Velocity @ 72VDC	m/s	(in/s)	5.9	(239.9)
Position Detection				
Repeatability	mm	(in)	±0.05	(±0.002)
Linearity	%		± 0.15	
Electrical Data				
Max. Current @ 48VDC	A_{pk}		3.7	
Max. Current @ 72VDC	A_{pk}		3.9	
Max. Cont. Current [Passive cooling /Fan / Fluid]	A_{pk}		0.78 / 1.4 / -	
Thermal Data				
Max. Winding Temperature (Sensor)	°C		90	
Thermal Resistance [Passive cooling / Fan / Fluid]	°K/W		6.4 / 1.9 / -	
Thermal Time Constant [Passive cooling / Fan / Fluid]	s		830 / 250 / -	
Mechanical Data				
Slider Length	mm	(in)	420	(17)
Slider Mass	g	(lb)	340	(0.75)

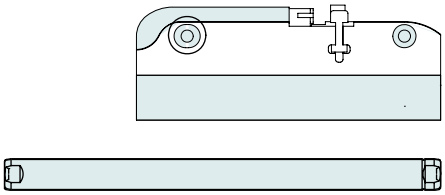

Item	Description	Item-No.
PS02-23Sx80-F	Stator with Flat cable connector 13 Pin	0150-1272

PL01-12x420/380-LC	Slider 'standard LC'	0150-2585
PL02-12x420/380-LC	Slider 'heavy duty LC'	0150-2595

P02-23Sx80/350x410-LC

Max. Stroke: 410 mm
Peak Force: 44 N

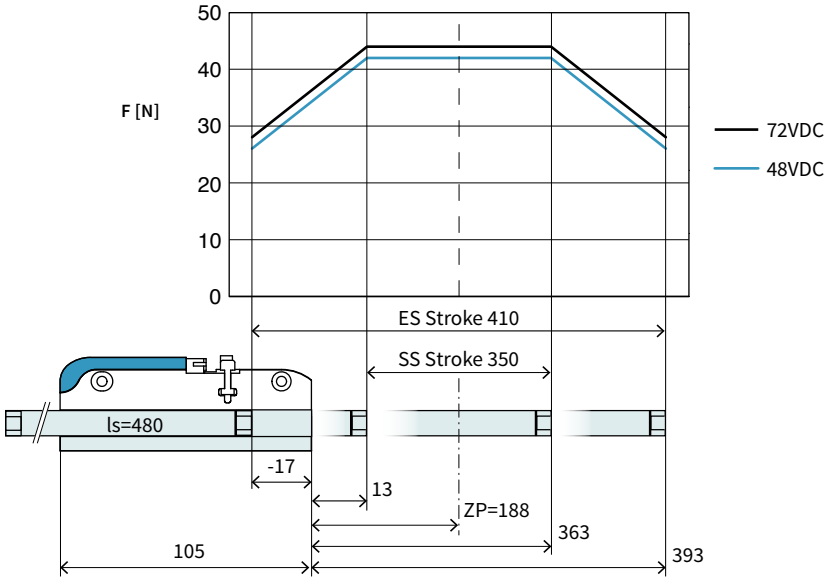

Dimensions in mm

Technical Data P02-23Sx80/350x410-LC				
Stroke				
Standard Stroke (SS)	mm	(in)	350	(13.8)
Extended Stroke (ES)	mm	(in)	410	(16.1)
Force				
Max. Force @ 48VDC	N	(lbf)	41.6	(9.35)
Max. Force @ 72VDC	N	(lbf)	44	(9.89)
Max. Cont. Force [Passive cooling/ Fan / Fluid]	N	(lbf)	8.6 / 16 / -	(1.9 / 3.5 / -)
Max. Border Force relative	%		63	
Force Constant	N/A_{pk}	(lbf/A_{pk})	11	(2.47)
Velocity				
Max. Velocity @ 48VDC	m/s	(in/s)	3.9	(159.9)
Max. Velocity @ 72VDC	m/s	(in/s)	5.9	(239.9)
Position Detection				
Repeatability	mm	(in)	±0.05	(±0.002)
Linearity	%		± 0.15	
Electrical Data				
Max. Current @ 48VDC	A_{pk}		3.7	
Max. Current @ 72VDC	A_{pk}		3.9	
Max. Cont. Current [Passive cooling /Fan / Fluid]	A_{pk}		0.78 / 1.4 / -	
Thermal Data				
Max. Winding Temperature (Sensor)	°C		90	
Thermal Resistance [Passive cooling / Fan / Fluid]	°K/W		6.4 / 1.9 / -	
Thermal Time Constant [Passive cooling / Fan / Fluid]	s		830 / 250 / -	
Mechanical Data				
Slider Length	mm	(in)	480	(19)
Slider Mass	g	(lb)	390	(0.86)

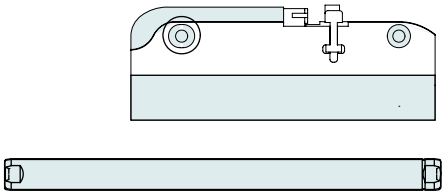

Item	Description	Item-No.
PS02-23Sx80-F	Stator with Flat cable connector 13 Pin	0150-1272

PL01-12x480/440-LC	Slider 'standard LC'	0150-2586
PL02-12x480/440-LC	Slider 'heavy duty LC'	0150-2597

P02-23Sx80/450x510-LC

Max. Stroke: 510 mm
Peak Force: 44 N

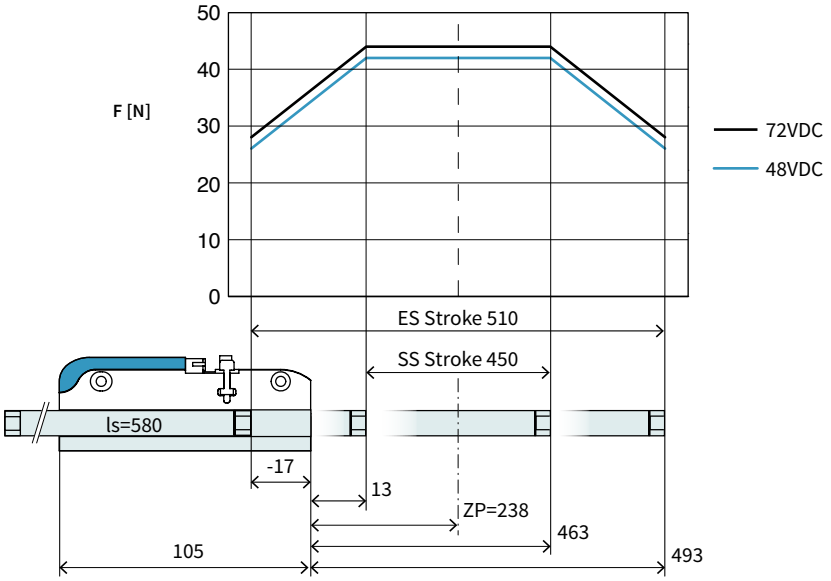

Dimensions in mm

Technical Data P02-23Sx80/450x510-LC				
Stroke				
Standard Stroke (SS)	mm	(in)	450	(17.69)
Extended Stroke (ES)	mm	(in)	510	(20.1)
Force				
Max. Force @ 48VDC	N	(lbf)	41.6	(9.35)
Max. Force @ 72VDC	N	(lbf)	44	(9.89)
Max. Cont. Force [Passive cooling/ Fan / Fluid]	N	(lbf)	8.6 / 16 / -	(1.9 / 3.5 / -)
Max. Border Force relative	%		63	
Force Constant	N/A_{pk}	(lbf/A_{pk})	11	(2.47)
Velocity				
Max. Velocity @ 48VDC	m/s	(in/s)	3.9	(159.9)
Max. Velocity @ 72VDC	m/s	(in/s)	5.9	(239.9)
Position Detection				
Repeatability	mm	(in)	±0.05	(±0.002)
Linearity	%		± 0.15	
Electrical Data				
Max. Current @ 48VDC	A_{pk}		3.7	
Max. Current @ 72VDC	A_{pk}		3.9	
Max. Cont. Current [Passive cooling /Fan / Fluid]	A_{pk}		0.78 / 1.4 / -	
Thermal Data				
Max. Winding Temperature (Sensor)	°C		90	
Thermal Resistance [Passive cooling / Fan / Fluid]	°K/W		6.4 / 1.9 / -	
Thermal Time Constant [Passive cooling / Fan / Fluid]	s		830 / 250 / -	
Mechanical Data				
Slider Length	mm	(in)	580	(23)
Slider Mass	g	(lb)	480	(1.06)

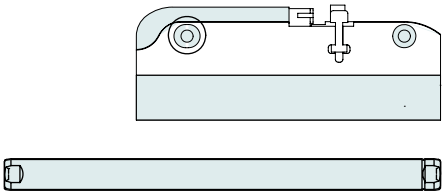

Item	Description	Item-No.
PS02-23Sx80-F	Stator with Flat cable connector 13 Pin	0150-1272

PL01-12x580/540-LC	Slider 'standard LC'	0150-2587
PL02-12x580/540-LC	Slider 'heavy duty LC'	0150-2596

P02-23Sx80/630x690-LC

Max. Stroke: 690 mm
Peak Force: 44 N

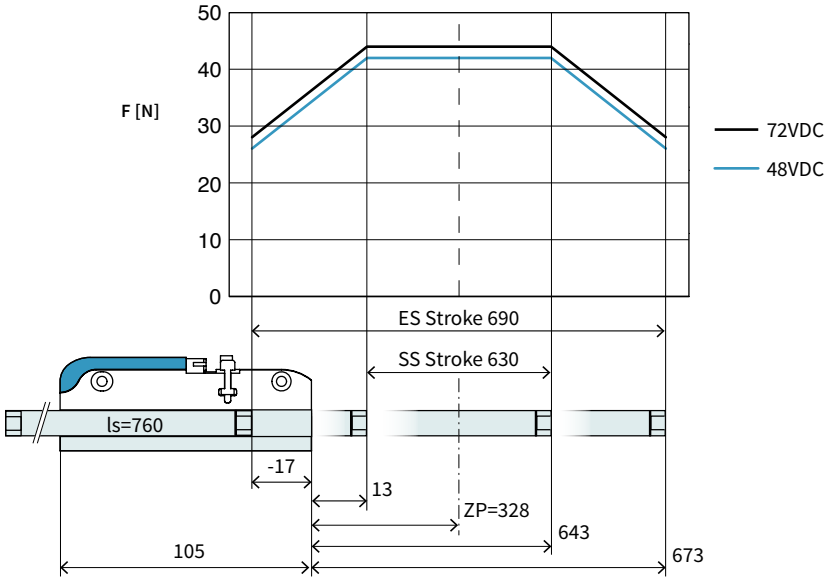

Dimensions in mm

Technical Data P02-23Sx80/630x690-LC				
Stroke				
Standard Stroke (SS)	mm	(in)	630	(24.8)
Extended Stroke (ES)	mm	(in)	690	(27.19)
Force				
Max. Force @ 48VDC	N	(lbf)	41.6	(9.35)
Max. Force @ 72VDC	N	(lbf)	44	(9.89)
Max. Cont. Force [Passive cooling/ Fan / Fluid]	N	(lbf)	8.6 / 16 / -	(1.9 / 3.5 / -)
Max. Border Force relative	%		63	
Force Constant	N/A_{pk}	(lbf/A_{pk})	11	(2.47)
Velocity				
Max. Velocity @ 48VDC	m/s	(in/s)	3.9	(159.9)
Max. Velocity @ 72VDC	m/s	(in/s)	5.9	(239.9)
Position Detection				
Repeatability	mm	(in)	±0.05	(±0.002)
Linearity	%		± 0.15	
Electrical Data				
Max. Current @ 48VDC	A_{pk}		3.7	
Max. Current @ 72VDC	A_{pk}		3.9	
Max. Cont. Current [Passive cooling /Fan / Fluid]	A_{pk}		0.78 / 1.4 / -	
Thermal Data				
Max. Winding Temperature (Sensor)	°C		90	
Thermal Resistance [Passive cooling / Fan / Fluid]	°K/W		6.4 / 1.9 / -	
Thermal Time Constant [Passive cooling / Fan / Fluid]	s		830 / 250 / -	
Mechanical Data				
Slider Length	mm	(in)	760	(30)
Slider Mass	g	(lb)	630	(1.4)

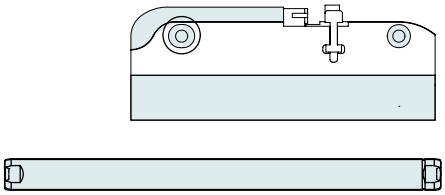

Item	Description	Item-No.
PS02-23Sx80-F	Stator with Flat cable connector 13 Pin	0150-1272

PL01-12x760/720-LC	Slider 'standard LC'	0150-2589
PL02-12x760/720-LC	Slider 'heavy duty LC'	on request

P02-23Sx80/720x780-LC

Max. Stroke: 780 mm
Peak Force: 44 N

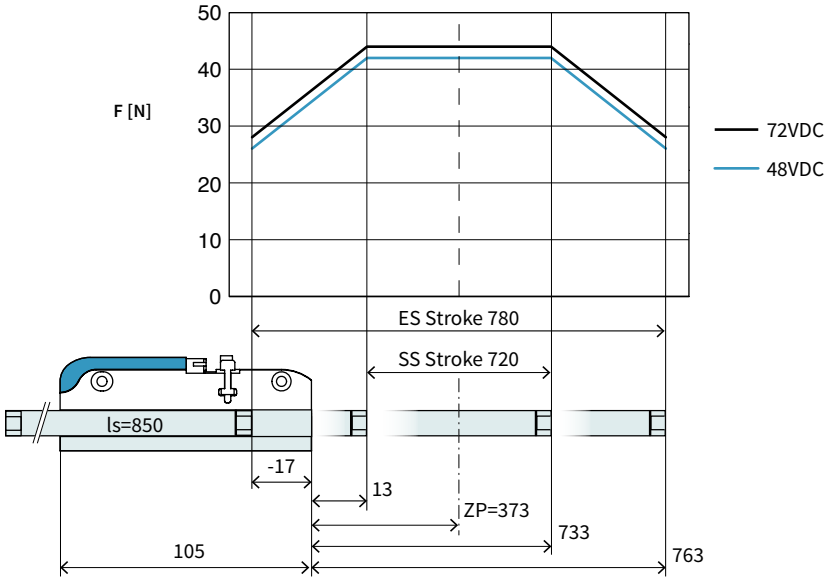

Dimensions in mm

Technical Data P02-23Sx80/720x780-LC				
Stroke				
Standard Stroke (SS)	mm	(in)	720	(28.3)
Extended Stroke (ES)	mm	(in)	780	(30.69)
Force				
Max. Force @ 48VDC	N	(lbf)	41.6	(9.35)
Max. Force @ 72VDC	N	(lbf)	44	(9.89)
Max. Cont. Force [Passive cooling/ Fan / Fluid]	N	(lbf)	8.6 / 16 / -	(1.9 / 3.5 / -)
Max. Border Force relative	%		63	
Force Constant	N/A_{pk}	(lbf/A_{pk})	11	(2.47)
Velocity				
Max. Velocity @ 48VDC	m/s	(in/s)	3.9	(159.9)
Max. Velocity @ 72VDC	m/s	(in/s)	5.9	(239.9)
Position Detection				
Repeatability	mm	(in)	±0.05	(±0.002)
Linearity	%		± 0.15	
Electrical Data				
Max. Current @ 48VDC	A_{pk}		3.7	
Max. Current @ 72VDC	A_{pk}		3.9	
Max. Cont. Current [Passive cooling /Fan / Fluid]	A_{pk}		0.78 / 1.4 / -	
Thermal Data				
Max. Winding Temperature (Sensor)	°C		90	
Thermal Resistance [Passive cooling / Fan / Fluid]	°K/W		6.4 / 1.9 / -	
Thermal Time Constant [Passive cooling / Fan / Fluid]	s		830 / 250 / -	
Mechanical Data				
Slider Length	mm	(in)	850	(33)
Slider Mass	g	(lb)	700	(1.3)

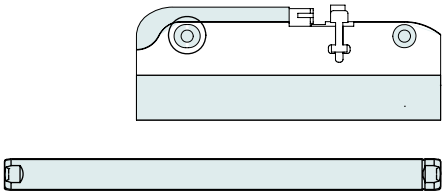

Item	Description	Item-No.
PS02-23Sx80-F	Stator with Flat cable connector 13 Pin	0150-1272

PL01-12x850/810-LC	Slider 'standard LC'	0150-2588
PL01-12x850/810-LC	Slider 'heavy duty LC'	on request

Motor Cable

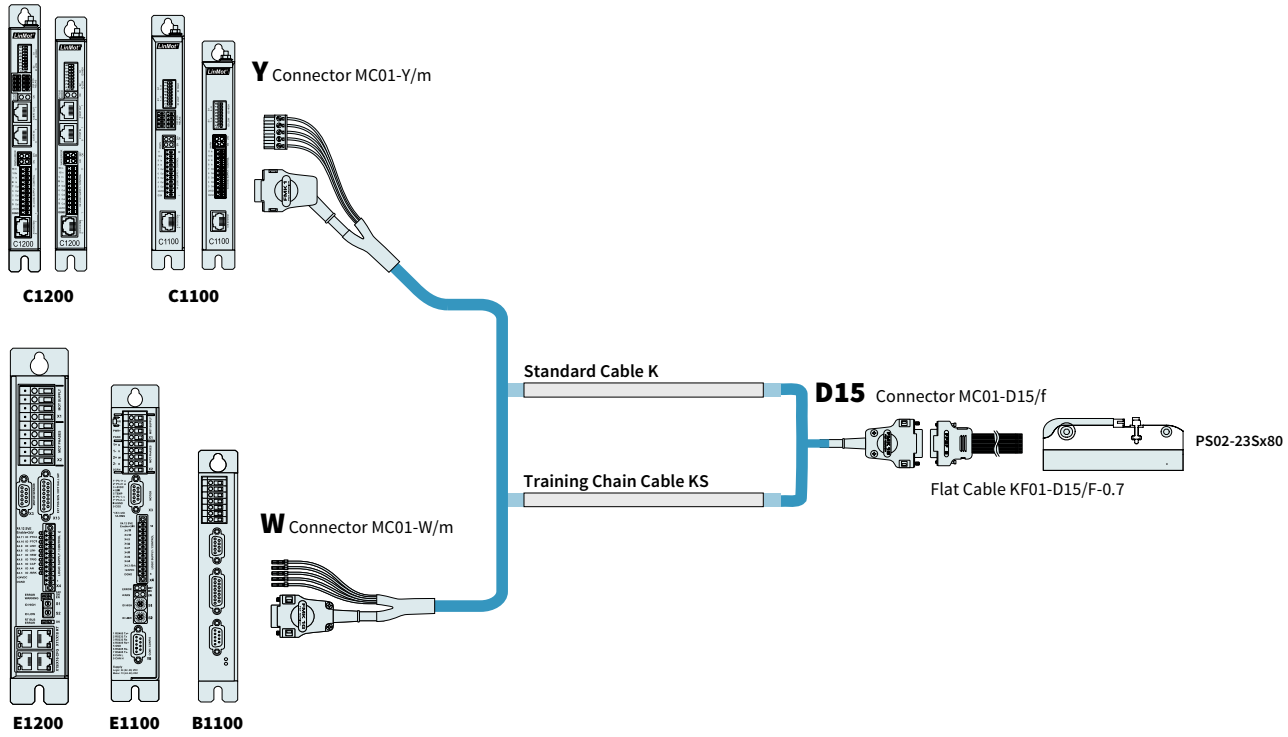

ORDERING INFORMATION

STANDARD CABLE		
Item	**Description**	**Item-No.**
K05-W/D15-	Motor Cable W/D15, Custom length	0150-3333
K05-Y-Fe/D15-	Motor Cable Y-Fe/D15, Custom length	0150-3504

TRAILING CHAIN CABLE		
Item	**Description**	**Item-No.**
KS05-W/D15-	Trailing Chain Cable KS05-W/D15-, Custom length	on request
KS05-Y-Fe/D15-	Trailing Chain Cable KS05-Y-Fe/D15-, Custom length	0150-3683

FLAT CABLE		
Item	**Description**	**Item-No.**
KF02-D15/F-0.08	Flat Cable 0.08 m, for PS02-23Sx80-F	0150-2150
KF02-D15/F-0.16	Flat Cable 0.16 m, for PS02-23Sx80-F	0150-2156
KF02-D15/F-0.32	Flat Cable 0.32 m, for PS02-23Sx80-F	0150-2152
KF02-D15/F-0.48	Flat Cable 0.48 m, for PS02-23Sx80-F	0150-2154
KF02-D15/F-0.70	Flat Cable 0.70 m, for PS02-23Sx80-F	0150-2158

CONNECTOR & CABLE (INDIVIDUAL)		
Item	**Description**	**Item-No.**
MC01-W/m	Motor Connector W/m	0150-3140
MC01-Y-Fe/m	Motor Connector Y-Fe/m	0150-3289
MC01-D15/f	Motor Connector D15 (f)	0150-3136
K05-04/05	Motor Cable per m	0150-1920
KS05-04/05	Trailing Chain Cable per m	0150-1938

SLIDER MOUNTING





Item	Description	Item-No.
PLF01-12	Fixed End Washer Set for 12 mm sliders	0150-3085
PLF01-12-Ni	Fixed End Washer Set for 12 mm sliders nickel-plated	0150-3573
PLL02-12	Floating support for PL01-12 Sliders	0150-3111

FIND MORE PRODUCT DETAILS IN THE CHAPTER "ACCESSORIES".

EXTERNAL POSITION SENSORS



Item	Description	Item-No.
MS01-1/D	Linear Encoder 1µm, A/B (for incremental strip)	0150-1840
MB01-1000	Magnetic incremental strip for MS01-1/D, per cm	0150-1963
KS025-D/D-Encoder	Encoder Cable (Length in m)	0150-3166
KS025-D/D15-Encoder	Encoder Cable (Length in m)	0150-3168

FIND MORE PRODUCT DETAILS IN THE CHAPTER "ACCESSORIES".



Item	Description	Item-No.
MS01-1/D-SSI	Linear Encoder 1µm, A/B (for absolute strip)	0150-2095
MB01-1000-ABS	Magnetic absolute strip for MS01-1/D-SSI (per cm)	0150-2096
EC01-ABS/ENC-12-S	MS01-1/D-SSI Encoder connector straight	0150-3616
KSS01-12-D15/ABS-ENC	Special cable for MS01-1/D-SSI on C1100/C1200/C1400/E1200/E1400 Drives	0150-3652

FIND MORE PRODUCT DETAILS IN THE CHAPTER "ACCESSORIES".

LINEAR MOTORS P02-23Sx80F-HP



- Short design
- Integrated mounting flange
- Pluggable motor cable with cover
- Free positionable cable outlet
- For use where space is limited and in multi-axis applications

LINEAR MOTORS P02-23Sx80F-HP

Technical Data 93

Motor Specifications

P02-23Sx80F/0x60-HP 97

P02-23Sx80F/20x80-HP 98

P02-23Sx80F/40x100-HP 99

P02-23Sx80F/70x130-HP 100

P02-23Sx80F/100x160-HP 101

P02-23Sx80F/140x200-HP 102

P02-23Sx80F/160x220-HP 103

P02-23Sx80F/220x280-HP 104

P02-23Sx80F/290x350-HP 105

P02-23Sx80F/350x410-HP 106

P02-23Sx80F/450x510-HP 107

P02-23Sx80F/630x690-HP 108

P02-23Sx80F/720x780-HP 109

Accessories 110



MOTOR FAMILY P02-23Sx80F-HP

Technical Data				
Stroke				
Standard Stroke (SS)	mm	(in)	≤ 720	(≤ 28.3)
Extended Stroke (ES)	mm	(in)	≤ 780	(≤ 30.69)
Force				
Max. Force @ 48VDC	N	(lbf)	67.1	(15.1)
Max. Force @ 72VDC	N	(lbf)	67.1	(15.1)
Max. Cont. Force [Passive cooling/ Fan / Fluid]	N	(lbf)	13 / 24 / -	(2.9 / 5.3 / -)
Max. Border Force relative	%		≤ 63	
Force Constant	N/A_{pk}	(lbf/A_{pk})	8.95	(2.01)
Velocity				
Max. Velocity @ 48VDC	m/s	(in/s)	4.9	(189.9)
Max. Velocity @ 72VDC	m/s	(in/s)	7.3	(289.9)
Position Detection				
Position Resolution	mm	(in)	0.002	(0.0001)
Repeatability	mm	(in)	±0.05	(±0.002)
Position Resolution with ES	mm	(in)	0.001	(0.00004)
Repeatability with ES	mm	(in)	±0.01	(±0.0004)
Linearity with ES	mm	(in)	±0.01	(±0.0004)
Electrical Data				
Max. Current @ 48VDC	A_{pk}		7.4	
Max. Current @ 72VDC	A_{pk}		7.4	
Max. Cont. Current [Passive cooling /Fan / Fluid]	A_{pk}		1.5 / 2.7 / -	
Terminal Resistance 25 °C / 150 °C	Ohm		4.2 / 6.2	
Terminal Inductivity	mH		0.6	
Magnetic Period	mm	(in)	20	(0.78)
Thermal Data				
Max. Winding Temperature (Sensor)	°C		120	
Thermal Resistance [Passive cooling / Fan / Fluid]	°K/W		6.4 / 1.9 / -	
Thermal Time Constant [Passive cooling / Fan / Fluid]	s		830 / 250 / -	
Mechanical Data				
Stator Diameter	mm	(in)	23	(0.91)
Stator Length [Connector type / Cable type]	mm	(in)	105	(4.1)
Stator Mass	g	(lb)	245	(0.54)
Slider Diameter	mm	(in)	12	(0.47)
Slider Length	mm	(in)	130 - 850	(5.1 - 33)
Slider Mass	g	(lb)	90 - 700	(0.2 - 1.54)
IP Code			IP 50	

STATOR

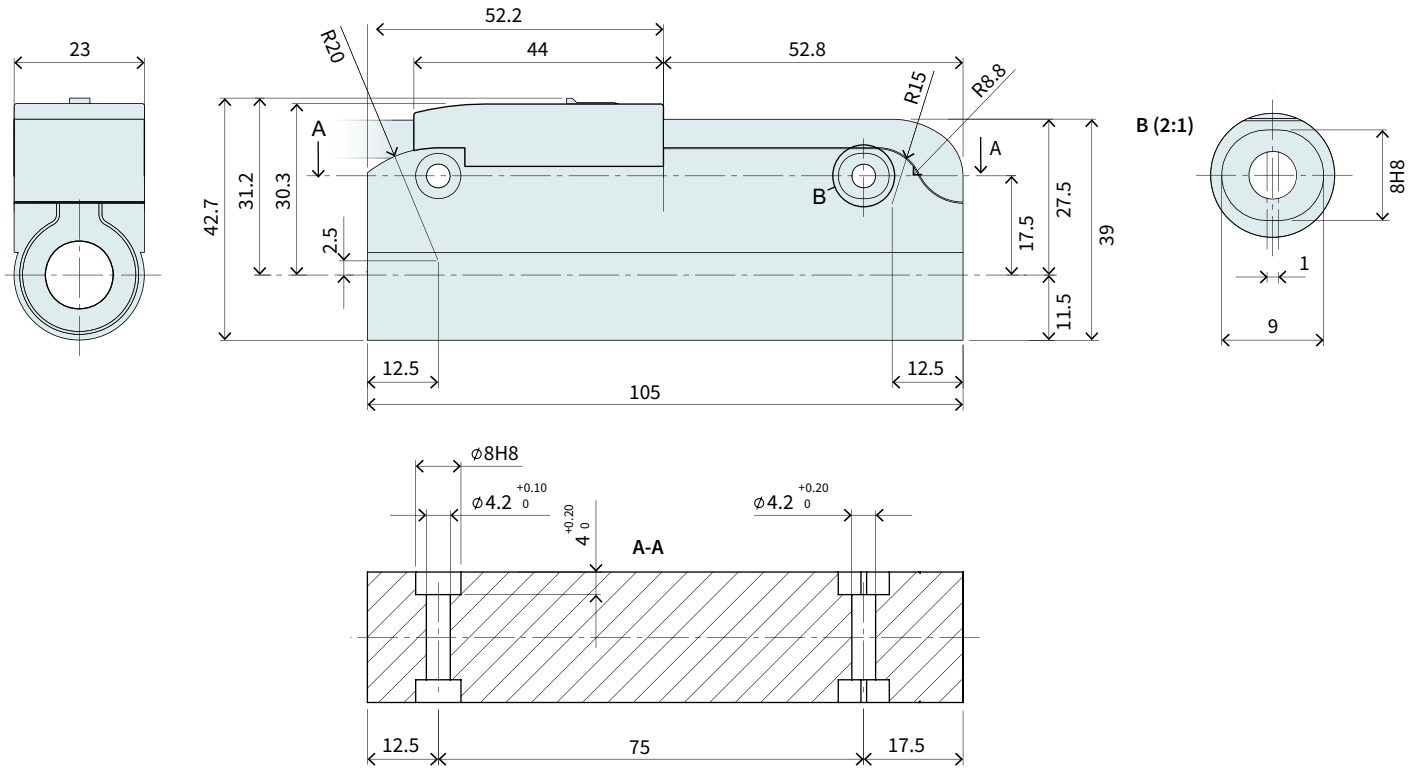

Item	Description	Item-No.
PS02-23Sx80F-HP-K	Stator HP, Cable -90°, 0°, +90°	0150-1285

CONNECTOR

Motor Connector Wiring		Wire color motor cable
Pin 1	Phase 1+	red
Pin 2	Phase 2+	blue
Pin 3	n.c.	n.c.
Pin 4	Phase 1-	pink
Pin 5	Phase 2-	grey
Pin 6	Sensor Sin	yellow
Pin 7	Sensor Cos	green
Pin 8	GND	brown
Pin 9	+5V	white
Pin 10	Temp sensor	black
	Housing	Shield

K-Connector

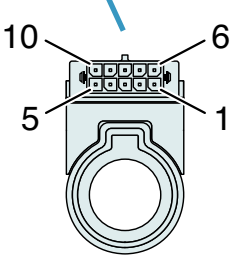

View: Motor Connector, plug side

SLIDER

Number of grooves determines the slider type
(see chapter 2 / slider) and marks the front end.

Slider HP / Heavy Duty HP

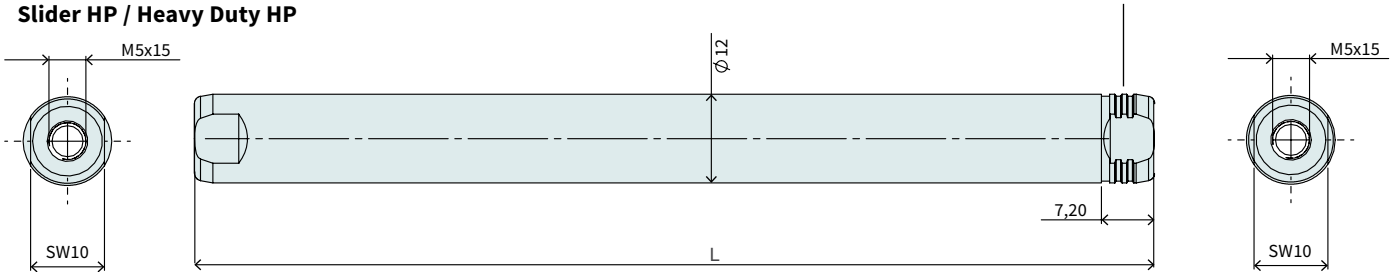

Hollow slider HP

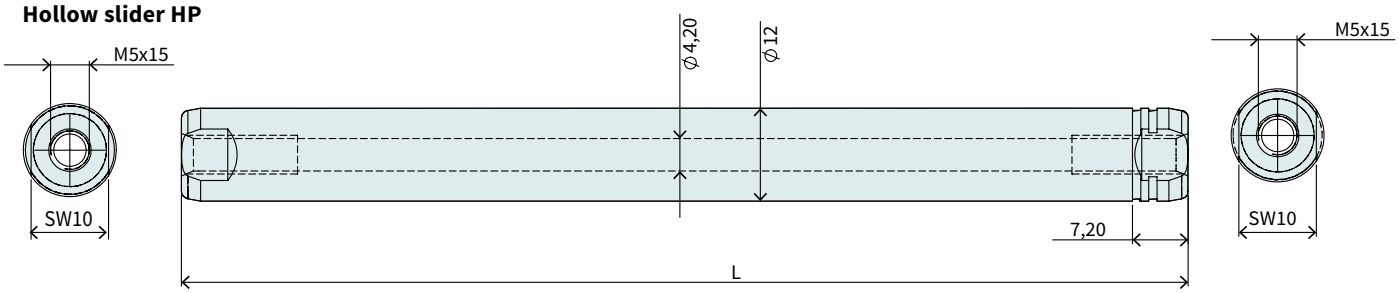

Slider High Performance				
Item	**Description**	**Max. Stroke [mm]**	**Standard Stroke [mm]**	**Item-No.**
PL01-12x130/90-HP	Slider 'High Performance'	60	-	0150-2209
PL01-12x150/110-HP	Slider 'High Performance'	80	20	0150-2281
PL01-12x170/130-HP	Slider 'High Performance'	100	40	0150-1529
PL01-12x200/160-HP	Slider 'High Performance'	130	70	0150-1518
PL01-12x230/190-HP	Slider 'High Performance'	160	100	0150-1519
PL01-12x270/230-HP	Slider 'High Performance'	200	140	0150-1520
PL01-12x290/250-HP	Slider 'High Performance'	220	160	0150-1521
PL01-12x350/310-HP	Slider 'High Performance'	280	220	0150-1522
PL01-12x420/380-HP	Slider 'High Performance'	350	290	0150-1523
PL01-12x480/440-HP	Slider 'High Performance'	410	350	0150-1524
PL01-12x580/540-HP	Slider 'High Performance'	510	450	0150-1525
PL01-12x760/720-HP	Slider 'High Performance'	690	630	0150-1526
PL01-12x850/810-HP	Slider 'High Performance'	780	720	0150-1527

Slider Heavy Duty High Performance				
Item	**Description**	**Max. Stroke [mm]**	**Standard Stroke [mm]**	**Item-No.**
PL02-12x130/90-HP	Slider 'heavy duty' 'High Performance	60	-	on request
PL02-12x150/110-HP	Slider 'heavy duty' 'High Performance	80	20	on request
PL02-12x170/130-HP	Slider 'heavy duty' 'High Performance	100	40	0150-1559
PL02-12x200/160-HP	Slider 'heavy duty' 'High Performance	130	70	0150-1532
PL02-12x230/190-HP	Slider 'heavy duty' 'High Performance	160	100	0150-1552
PL02-12x270/230-HP	Slider 'heavy duty' 'High Performance	200	140	0150-1533
PL02-12x290/250-HP	Slider 'heavy duty' 'High Performance	220	160	0150-1495
PL02-12x350/310-HP	Slider 'heavy duty' 'High Performance	280	220	0150-1555
PL02-12x420/380-HP	Slider 'heavy duty' 'High Performance	350	290	0150-1554
PL02-12x480/440-HP	Slider 'heavy duty' 'High Performance	410	350	0150-2519
PL02-12x580/540-HP	Slider 'heavy duty' 'High Performance	510	450	0150-2520
PL02-12x760/720-HP	Slider 'heavy duty' 'High Performance	690	630	0150-2521
PL02-12x850/810-HP	Slider 'heavy duty' 'High Performance	780	720	0150-2516

Hollow slider High Performance				
Item	**Description**	**Max. Stroke [mm]**	**Standard Stroke [mm]**	**Item-No.**
PL01-12x130/90-HP-L	Slider 'High Performance L'	60	–	0150-3687
PL01-12x150/110-HP-L	Slider 'High Performance L'	80	20	on request
PL01-12x170/130-HP-L	Slider 'High Performance L'	100	40	0150-3688
PL01-12x200/160-HP-L	Slider 'High Performance L'	130	70	0150-3689
PL01-12x230/190-HP-L	Slider 'High Performance L'	160	100	0150-2546
PL01-12x270/230-HP-L	Slider 'High Performance L'	200	140	0150-2557
PL01-12x290/250-HP-L	Slider 'High Performance L'	220	160	0150-3690
PL01-12x350/310-HP-L	Slider 'High Performance L'	280	220	0150-3691
PL01-12x420/380-HP-L	Slider 'High Performance L'	350	290	0150-3692
PL01-12x480/440-HP-L	Slider 'High Performance L'	410	350	0150-3693
PL01-12x580/540-HP-L	Slider 'High Performance L'	510	450	0150-3694
PL01-12x760/720-HP-L	Slider 'High Performance L'	690	630	0150-3695
PL01-12x850/810-HP-L	Slider 'High Performance L'	780	720	on request

P02-23Sx80F/0x60-HP

Max. Stroke: 60 mm
Peak Force: 67 N

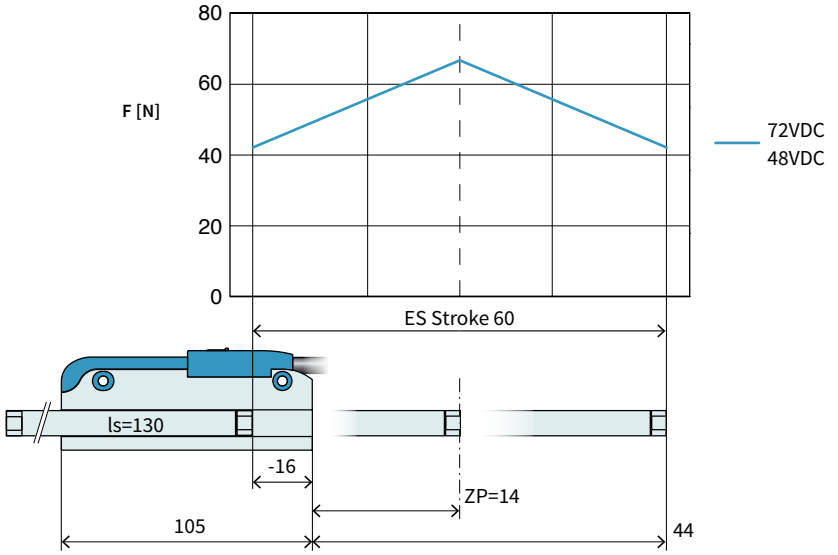

Dimensions in mm

Technical Data P02-23Sx80F/0x60-HP				
Stroke				
Standard Stroke (SS)	mm	(in)	0	(0)
Extended Stroke (ES)	mm	(in)	60	(2.35)
Force				
Max. Force @ 48VDC	N	(lbf)	67.1	(15.1)
Max. Force @ 72VDC	N	(lbf)	67.1	(15.1)
Max. Cont. Force [Passive cooling/ Fan / Fluid]	N	(lbf)	13 / 24 / -	(2.9 / 5.3 / -)
Max. Border Force relative	%		63	
Force Constant	N/A_{pk}	(lbf/A_{pk})	8.95	(2.01)
Velocity				
Max. Velocity @ 48VDC	m/s	(in/s)	4.9	(189.9)
Max. Velocity @ 72VDC	m/s	(in/s)	7.3	(289.9)
Position Detection				
Repeatability	mm	(in)	±0.05	(±0.002)
Linearity	%		± 0.5	
Electrical Data				
Max. Current @ 48VDC	A_{pk}		7.4	
Max. Current @ 72VDC	A_{pk}		7.4	
Max. Cont. Current [Passive cooling /Fan / Fluid]	A_{pk}		1.5 / 2.7 / -	
Thermal Data				
Max. Winding Temperature (Sensor)	°C		120	
Thermal Resistance [Passive cooling / Fan / Fluid]	°K/W		6.4 / 1.9 / -	
Thermal Time Constant [Passive cooling / Fan / Fluid]	s		830 / 250 / -	
Mechanical Data				
Slider Length	mm	(in)	130	(5.1)
Slider Mass	g	(lb)	90	(0.2)

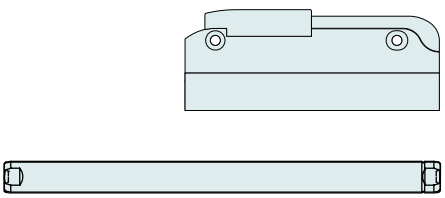

Item	Description	Item-No.
PS02-23Sx80F-HP-K	Stator HP, Cable -90°, 0°, +90°	0150-1285
PL01-12x130/90-HP	Slider 'High Performance'	0150-2209
PL02-12x130/90-HP	Slider 'heavy duty' 'High Performance	on request
PL01-12x130/90-HP-L*	Slider 'High Performance L'	0150-3687

* With this slider, the motor specifications above change.

P02-23Sx80F/20x80-HP

Max. Stroke: 80 mm
Peak Force: 67 N

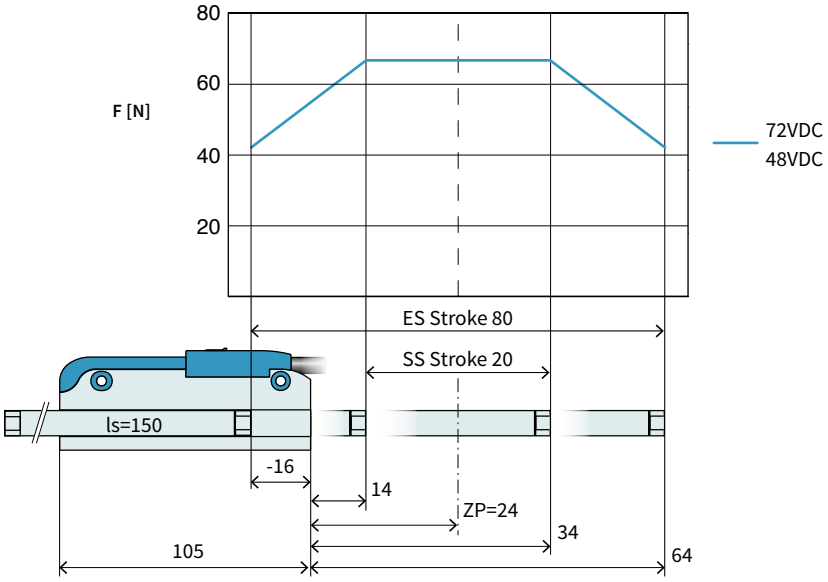

Dimensions in mm

Technical Data P02-23Sx80F/20x80-HP				
Stroke				
Standard Stroke (SS)	mm	(in)	20	(0.78)
Extended Stroke (ES)	mm	(in)	80	(3.14)
Force				
Max. Force @ 48VDC	N	(lbf)	67.1	(15.1)
Max. Force @ 72VDC	N	(lbf)	67.1	(15.1)
Max. Cont. Force [Passive cooling/ Fan / Fluid]	N	(lbf)	13 / 24 / -	(2.9 / 5.3 / -)
Max. Border Force relative	%		63	
Force Constant	N/A_{pk}	(lbf/A_{pk})	8.95	(2.01)
Velocity				
Max. Velocity @ 48VDC	m/s	(in/s)	4.9	(189.9)
Max. Velocity @ 72VDC	m/s	(in/s)	7.3	(289.9)
Position Detection				
Repeatability	mm	(in)	±0.05	(±0.002)
Linearity	%		± 0.4	
Electrical Data				
Max. Current @ 48VDC	A_{pk}		7.4	
Max. Current @ 72VDC	A_{pk}		7.4	
Max. Cont. Current [Passive cooling /Fan / Fluid]	A_{pk}		1.5 / 2.7 / -	
Thermal Data				
Max. Winding Temperature (Sensor)	°C		120	
Thermal Resistance [Passive cooling / Fan / Fluid]	°K/W		6.4 / 1.9 / -	
Thermal Time Constant [Passive cooling / Fan / Fluid]	s		830 / 250 / -	
Mechanical Data				
Slider Length	mm	(in)	150	(5.9)
Slider Mass	g	(lb)	110	(0.24)

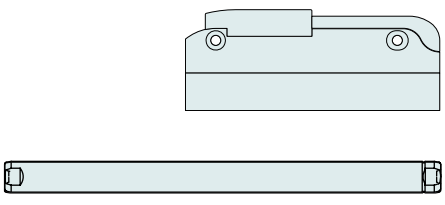

Item	Description	Item-No.
PS02-23Sx80F-HP-K	Stator HP, Cable -90°, 0°, +90°	0150-1285

PL01-12x150/110-HP	Slider 'High Performance'	0150-2281
PL02-12x150/110-HP	Slider 'heavy duty' 'High Performance	on request
PL01-12x150/110-HP-L*	Slider 'High Performance L'	on request

* With this slider, the motor specifications above change.

P02-23Sx80F/40x100-HP

Max. Stroke: 100 mm
Peak Force: 67 N

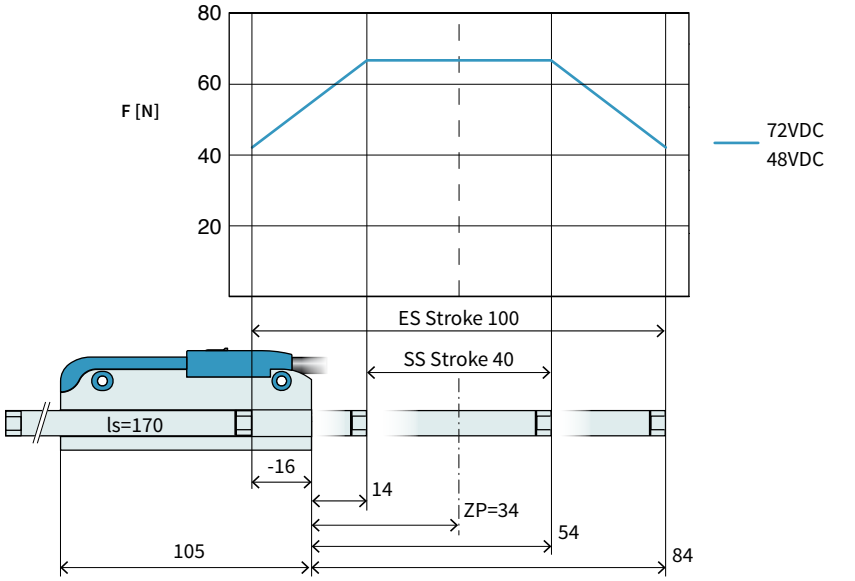

Dimensions in mm

Technical Data P02-23Sx80F/40x100-HP				
Stroke				
Standard Stroke (SS)	mm	(in)	40	(1.57)
Extended Stroke (ES)	mm	(in)	100	(3.93)
Force				
Max. Force @ 48VDC	N	(lbf)	67.1	(15.1)
Max. Force @ 72VDC	N	(lbf)	67.1	(15.1)
Max. Cont. Force [Passive cooling/ Fan / Fluid]	N	(lbf)	13 / 24 / -	(2.9 / 5.3 / -)
Max. Border Force relative	%		63	
Force Constant	N/A_{pk}	(lbf/A_{pk})	8.95	(2.01)
Velocity				
Max. Velocity @ 48VDC	m/s	(in/s)	4.9	(189.9)
Max. Velocity @ 72VDC	m/s	(in/s)	7.3	(289.9)
Position Detection				
Repeatability	mm	(in)	±0.05	(±0.002)
Linearity	%		± 0.35	
Electrical Data				
Max. Current @ 48VDC	A_{pk}		7.4	
Max. Current @ 72VDC	A_{pk}		7.4	
Max. Cont. Current [Passive cooling /Fan / Fluid]	A_{pk}		1.5 / 2.7 / -	
Thermal Data				
Max. Winding Temperature (Sensor)	°C		120	
Thermal Resistance [Passive cooling / Fan / Fluid]	°K/W		6.4 / 1.9 / -	
Thermal Time Constant [Passive cooling / Fan / Fluid]	s		830 / 250 / -	
Mechanical Data				
Slider Length	mm	(in)	170	(6.7)
Slider Mass	g	(lb)	130	(0.28)

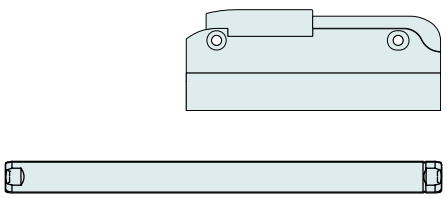

Item	Description	Item-No.
PS02-23Sx80F-HP-K	Stator HP, Cable -90°, 0°, +90°	0150-1285

PL01-12x170/130-HP	Slider 'High Performance'	0150-1529
PL02-12x170/130-HP	Slider 'heavy duty' 'High Performance	0150-1559
PL01-12x170/130-HP-L*	Slider 'High Performance L'	0150-3688

* With this slider, the motor specifications above change.

P02-23Sx80F/70x130-HP

Max. Stroke: 130 mm
Peak Force: 67 N

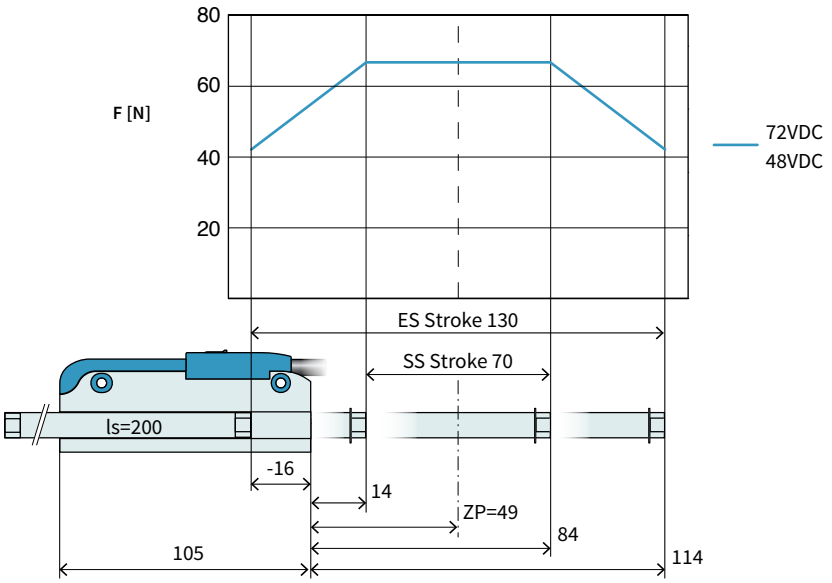

Dimensions in mm

Technical Data P02-23Sx80F/70x130-HP				
Stroke				
Standard Stroke (SS)	mm	(in)	70	(2.75)
Extended Stroke (ES)	mm	(in)	130	(5.12)
Force				
Max. Force @ 48VDC	N	(lbf)	67.1	(15.1)
Max. Force @ 72VDC	N	(lbf)	67.1	(15.1)
Max. Cont. Force [Passive cooling/ Fan / Fluid]	N	(lbf)	13 / 24 / -	(2.9 / 5.3 / -)
Max. Border Force relative	%		63	
Force Constant	N/A_{pk}	(lbf/A_{pk})	8.95	(2.01)
Velocity				
Max. Velocity @ 48VDC	m/s	(in/s)	4.9	(189.9)
Max. Velocity @ 72VDC	m/s	(in/s)	7.3	(289.9)
Position Detection				
Repeatability	mm	(in)	±0.05	(±0.002)
Linearity	%		± 0.3	
Electrical Data				
Max. Current @ 48VDC	A_{pk}		7.4	
Max. Current @ 72VDC	A_{pk}		7.4	
Max. Cont. Current [Passive cooling /Fan / Fluid]	A_{pk}		1.5 / 2.7 / -	
Thermal Data				
Max. Winding Temperature (Sensor)	°C		120	
Thermal Resistance [Passive cooling / Fan / Fluid]	°K/W		6.4 / 1.9 / -	
Thermal Time Constant [Passive cooling / Fan / Fluid]	s		830 / 250 / -	
Mechanical Data				
Slider Length	mm	(in)	200	(7.9)
Slider Mass	g	(lb)	155	(0.34)

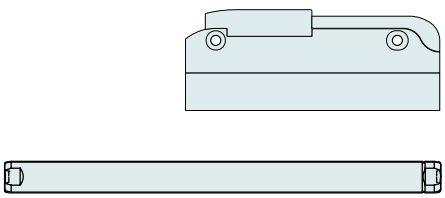

Item	Description	Item-No.
PS02-23Sx80F-HP-K	Stator HP, Cable -90°, 0°, +90°	0150-1285
PL01-12x200/160-HP	Slider 'High Performance'	0150-1518
PL02-12x200/160-HP	Slider 'heavy duty' 'High Performance	0150-1532
PL01-12x200/160-HP-L*	Slider 'High Performance L'	0150-3689

* With this slider, the motor specifications above change.

P02-23Sx80F/100x160-HP

Max. Stroke: 160 mm
Peak Force: 67 N

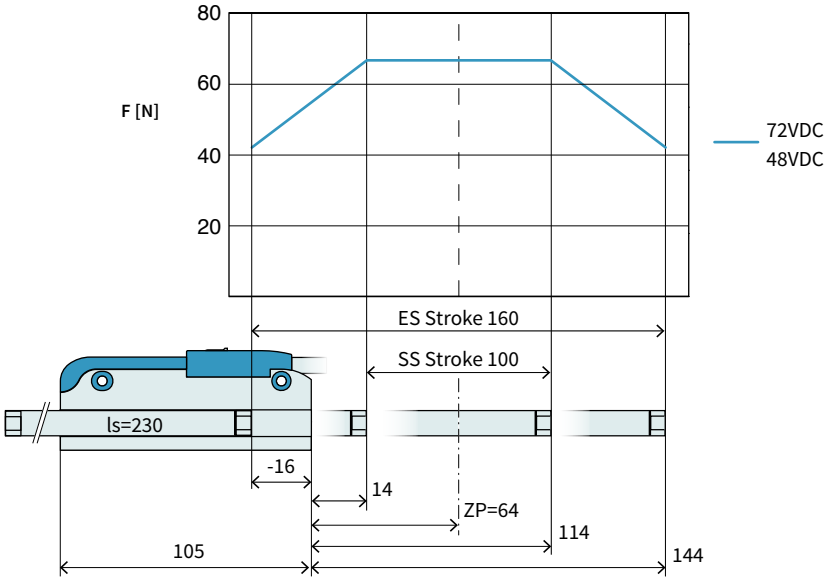

Dimensions in mm

Technical Data P02-23Sx80F/100x160-HP				
Stroke				
Standard Stroke (SS)	mm	(in)	100	(3.93)
Extended Stroke (ES)	mm	(in)	160	(6.29)
Force				
Max. Force @ 48VDC	N	(lbf)	67.1	(15.1)
Max. Force @ 72VDC	N	(lbf)	67.1	(15.1)
Max. Cont. Force [Passive cooling/ Fan / Fluid]	N	(lbf)	13 / 24 / -	(2.9 / 5.3 / -)
Max. Border Force relative	%		63	
Force Constant	N/A_{pk}	(lbf/A_{pk})	8.95	(2.01)
Velocity				
Max. Velocity @ 48VDC	m/s	(in/s)	4.9	(189.9)
Max. Velocity @ 72VDC	m/s	(in/s)	7.3	(289.9)
Position Detection				
Repeatability	mm	(in)	±0.05	(±0.002)
Linearity	%		± 0.25	
Electrical Data				
Max. Current @ 48VDC	A_{pk}		7.4	
Max. Current @ 72VDC	A_{pk}		7.4	
Max. Cont. Current [Passive cooling /Fan / Fluid]	A_{pk}		1.5 / 2.7 / -	
Thermal Data				
Max. Winding Temperature (Sensor)	°C		120	
Thermal Resistance [Passive cooling / Fan / Fluid]	°K/W		6.4 / 1.9 / -	
Thermal Time Constant [Passive cooling / Fan / Fluid]	s		830 / 250 / -	
Mechanical Data				
Slider Length	mm	(in)	230	(9.1)
Slider Mass	g	(lb)	180	(0.4)

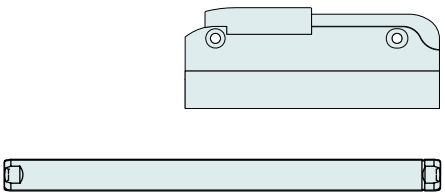

Item	Description	Item-No.
PS02-23Sx80F-HP-K	Stator HP, Cable -90°, 0°, +90°	0150-1285
PL01-12x230/190-HP	Slider 'High Performance'	0150-1519
PL02-12x230/190-HP	Slider 'heavy duty' 'High Performance	0150-1552
PL01-12x230/190-HP-L*	Slider 'High Performance L'	0150-2546

* With this slider, the motor specifications above change.

P0S-23Sx80F/140x200-HP

Max. Stroke: 200 mm
Peak Force: 67 N

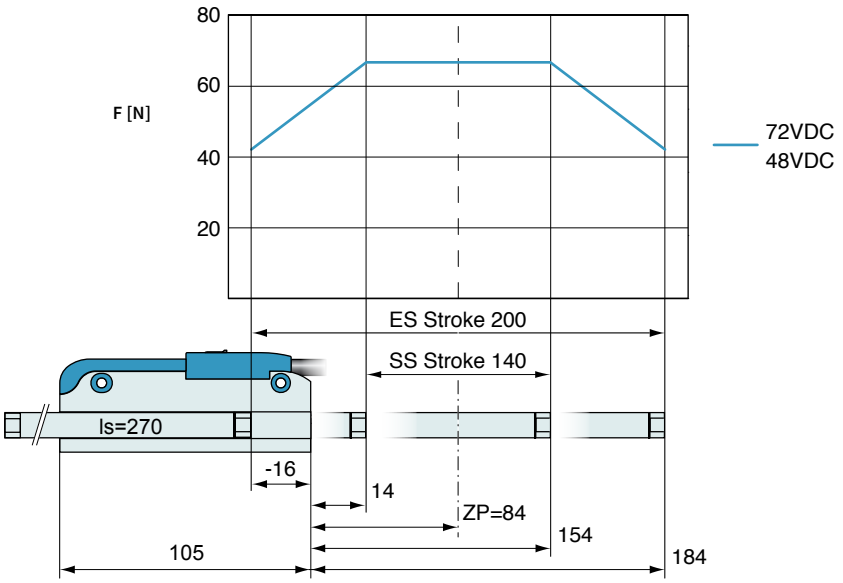

Dimensions in mm

Technical Data P02-23Sx80F/140x200-HP				
Stroke				
Standard Stroke (SS)	mm	(in)	140	(5.5)
Extended Stroke (ES)	mm	(in)	200	(7.86)
Force				
Max. Force @ 48VDC	N	(lbf)	67.1	(15.1)
Max. Force @ 72VDC	N	(lbf)	67.1	(15.1)
Max. Cont. Force [Passive cooling/ Fan / Fluid]	N	(lbf)	13 / 24 / -	(2.9 / 5.3 / -)
Max. Border Force relative	%		63	
Force Constant	N/A_{pk}	(lbf/A_{pk})	8.95	(2.01)
Velocity				
Max. Velocity @ 48VDC	m/s	(in/s)	4.9	(189.9)
Max. Velocity @ 72VDC	m/s	(in/s)	7.3	(289.9)
Position Detection				
Repeatability	mm	(in)	±0.05	(±0.002)
Linearity	%		± 0.2	
Electrical Data				
Max. Current @ 48VDC	A_{pk}		7.4	
Max. Current @ 72VDC	A_{pk}		7.4	
Max. Cont. Current [Passive cooling /Fan / Fluid]	A_{pk}		1.5 / 2.7 / -	
Thermal Data				
Max. Winding Temperature (Sensor)	°C		120	
Thermal Resistance [Passive cooling / Fan / Fluid]	°K/W		6.4 / 1.9 / -	
Thermal Time Constant [Passive cooling / Fan / Fluid]	s		830 / 250 / -	
Mechanical Data				
Slider Length	mm	(in)	270	(11)
Slider Mass	g	(lb)	215	(0.47)

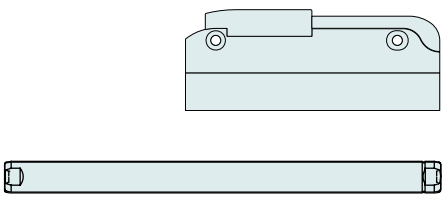

Item	Description	Item-No.
PS02-23Sx80F-HP-K	Stator HP, Cable -90°, 0°, +90°	0150-1285
PL01-12x270/230-HP	Slider 'High Performance'	0150-1520
PL02-12x270/230-HP	Slider 'heavy duty' 'High Performance	0150-1533
PL01-12x270/230-HP-L*	Slider 'High Performance L'	0150-2557

* With this slider, the motor specifications above change.

P02-23Sx80F/160x220-HP

Max. Stroke: 220 mm
Peak Force: 67 N

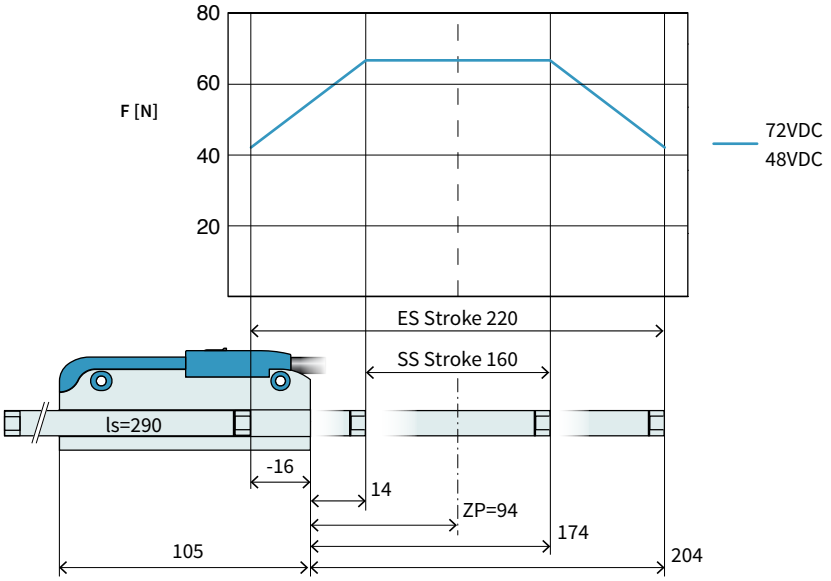

Dimensions in mm

Technical Data P02-23Sx80F/160x220-HP				
Stroke				
Standard Stroke (SS)	mm	(in)	160	(6.29)
Extended Stroke (ES)	mm	(in)	220	(8.65)
Force				
Max. Force @ 48VDC	N	(lbf)	67.1	(15.1)
Max. Force @ 72VDC	N	(lbf)	67.1	(15.1)
Max. Cont. Force [Passive cooling/ Fan / Fluid]	N	(lbf)	13 / 24 / -	(2.9 / 5.3 / -)
Max. Border Force relative	%		63	
Force Constant	N/A_{pk}	(lbf/A_{pk})	8.95	(2.01)
Velocity				
Max. Velocity @ 48VDC	m/s	(in/s)	4.9	(189.9)
Max. Velocity @ 72VDC	m/s	(in/s)	7.3	(289.9)
Position Detection				
Repeatability	mm	(in)	±0.05	(±0.002)
Linearity	%		± 0.2	
Electrical Data				
Max. Current @ 48VDC	A_{pk}		7.4	
Max. Current @ 72VDC	A_{pk}		7.4	
Max. Cont. Current [Passive cooling /Fan / Fluid]	A_{pk}		1.5 / 2.7 / -	
Thermal Data				
Max. Winding Temperature (Sensor)	°C		120	
Thermal Resistance [Passive cooling / Fan / Fluid]	°K/W		6.4 / 1.9 / -	
Thermal Time Constant [Passive cooling / Fan / Fluid]	s		830 / 250 / -	
Mechanical Data				
Slider Length	mm	(in)	290	(11)
Slider Mass	g	(lb)	230	(0.51)

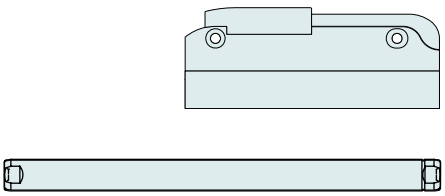

Item	Description	Item-No.
PS02-23Sx80F-HP-K	Stator HP, Cable -90°, 0°, +90°	0150-1285
PL01-12x290/250-HP	Slider 'High Performance'	0150-1521
PL02-12x290/250-HP	Slider 'heavy duty' 'High Performance	0150-1495
PL01-12x290/250-HP-L*	Slider 'High Performance L'	0150-3690

* With this slider, the motor specifications above change.

P02-23Sx80F/220x280-HP

Max. Stroke: 280 mm
Peak Force: 67 N

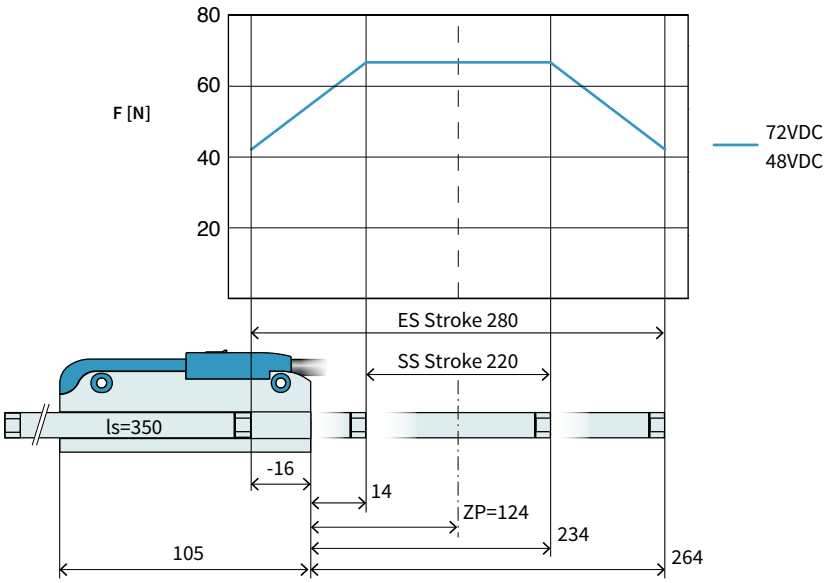

Dimensions in mm

Technical Data P02-23Sx80F/220x280-HP				
Stroke				
Standard Stroke (SS)	mm	(in)	220	(8.65)
Extended Stroke (ES)	mm	(in)	280	(10.99)
Force				
Max. Force @ 48VDC	N	(lbf)	67.1	(15.1)
Max. Force @ 72VDC	N	(lbf)	67.1	(15.1)
Max. Cont. Force [Passive cooling/ Fan / Fluid]	N	(lbf)	13 / 24 / -	(2.9 / 5.3 / -)
Max. Border Force relative	%		63	
Force Constant	N/A_{pk}	(lbf/A_{pk})	8.95	(2.01)
Velocity				
Max. Velocity @ 48VDC	m/s	(in/s)	4.9	(189.9)
Max. Velocity @ 72VDC	m/s	(in/s)	7.3	(289.9)
Position Detection				
Repeatability	mm	(in)	±0.05	(±0.002)
Linearity	%		± 0.2	
Electrical Data				
Max. Current @ 48VDC	A_{pk}		7.4	
Max. Current @ 72VDC	A_{pk}		7.4	
Max. Cont. Current [Passive cooling /Fan / Fluid]	A_{pk}		1.5 / 2.7 / -	
Thermal Data				
Max. Winding Temperature (Sensor)	°C		120	
Thermal Resistance [Passive cooling / Fan / Fluid]	°K/W		6.4 / 1.9 / -	
Thermal Time Constant [Passive cooling / Fan / Fluid]	s		830 / 250 / -	
Mechanical Data				
Slider Length	mm	(in)	350	(14)
Slider Mass	g	(lb)	280	(0.62)

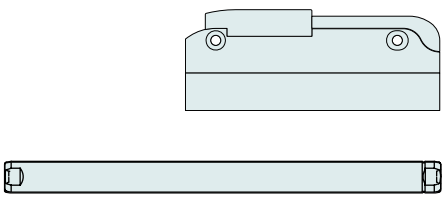

Item	Description	Item-No.
PS02-23Sx80F-HP-K	Stator HP, Cable -90°, 0°, +90°	0150-1285

PL01-12x350/310-HP	Slider 'High Performance'	0150-1522
PL02-12x350/310-HP	Slider 'heavy duty' 'High Performance	0150-1555
PL01-12x350/310-HP-L*	Slider 'High Performance L'	0150-3691

* With this slider, the motor specifications above change.

P02-23Sx80F/290x350-HP

Max. Stroke: 350 mm
Peak Force: 67 N

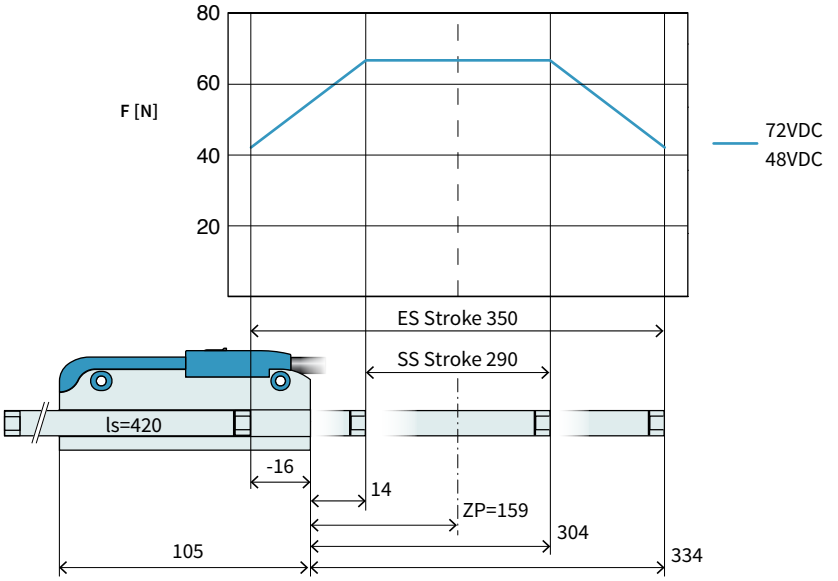

Dimensions in mm

Technical Data P02-23Sx80F/290x350-HP				
Stroke				
Standard Stroke (SS)	mm	(in)	290	(11.4)
Extended Stroke (ES)	mm	(in)	350	(13.8)
Force				
Max. Force @ 48VDC	N	(lbf)	67.1	(15.1)
Max. Force @ 72VDC	N	(lbf)	67.1	(15.1)
Max. Cont. Force [Passive cooling/ Fan / Fluid]	N	(lbf)	13 / 24 / -	(2.9 / 5.3 / -)
Max. Border Force relative	%		63	
Force Constant	N/A_{pk}	(lbf/A_{pk})	8.95	(2.01)
Velocity				
Max. Velocity @ 48VDC	m/s	(in/s)	4.9	(189.9)
Max. Velocity @ 72VDC	m/s	(in/s)	7.3	(289.9)
Position Detection				
Repeatability	mm	(in)	±0.05	(±0.002)
Linearity	%		± 0.15	
Electrical Data				
Max. Current @ 48VDC	A_{pk}		7.4	
Max. Current @ 72VDC	A_{pk}		7.4	
Max. Cont. Current [Passive cooling /Fan / Fluid]	A_{pk}		1.5 / 2.7 / -	
Thermal Data				
Max. Winding Temperature (Sensor)	°C		120	
Thermal Resistance [Passive cooling / Fan / Fluid]	°K/W		6.4 / 1.9 / -	
Thermal Time Constant [Passive cooling / Fan / Fluid]	s		830 / 250 / -	
Mechanical Data				
Slider Length	mm	(in)	420	(17)
Slider Mass	g	(lb)	340	(0.75)

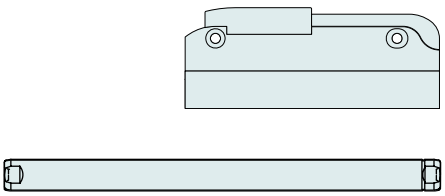

Item	Description	Item-No.
PS02-23Sx80F-HP-K	Stator HP, Cable -90°, 0°, +90°	0150-1285

PL01-12x420/380-HP	Slider 'High Performance'	0150-1523
PL02-12x420/380-HP	Slider 'heavy duty' 'High Performance	0150-1554
PL01-12x420/380-HP-L*	Slider 'High Performance L'	0150-3692

* With this slider, the motor specifications above change.

P02-23Sx80F/350x410-HP

Max. Stroke: 410 mm
Peak Force: 67 N

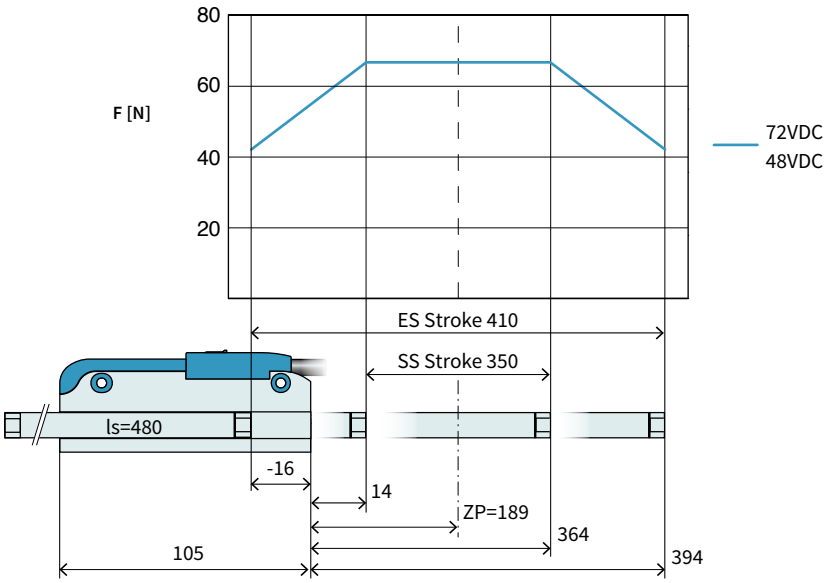

Dimensions in mm

Technical Data P02-23Sx80F/350x410-HP				
Stroke				
Standard Stroke (SS)	mm	(in)	350	(13.8)
Extended Stroke (ES)	mm	(in)	410	(16.1)
Force				
Max. Force @ 48VDC	N	(lbf)	67.1	(15.1)
Max. Force @ 72VDC	N	(lbf)	67.1	(15.1)
Max. Cont. Force [Passive cooling/ Fan / Fluid]	N	(lbf)	13 / 24 / -	(2.9 / 5.3 / -)
Max. Border Force relative	%		63	
Force Constant	N/A_{pk}	(lbf/A_{pk})	8.95	(2.01)
Velocity				
Max. Velocity @ 48VDC	m/s	(in/s)	4.9	(189.9)
Max. Velocity @ 72VDC	m/s	(in/s)	7.3	(289.9)
Position Detection				
Repeatability	mm	(in)	±0.05	(±0.002)
Linearity	%		± 0.15	
Electrical Data				
Max. Current @ 48VDC	A_{pk}		7.4	
Max. Current @ 72VDC	A_{pk}		7.4	
Max. Cont. Current [Passive cooling /Fan / Fluid]	A_{pk}		1.5 / 2.7 / -	
Thermal Data				
Max. Winding Temperature (Sensor)	°C		120	
Thermal Resistance [Passive cooling / Fan / Fluid]	°K/W		6.4 / 1.9 / -	
Thermal Time Constant [Passive cooling / Fan / Fluid]	s		830 / 250 / -	
Mechanical Data				
Slider Length	mm	(in)	480	(19)
Slider Mass	g	(lb)	390	(0.78)

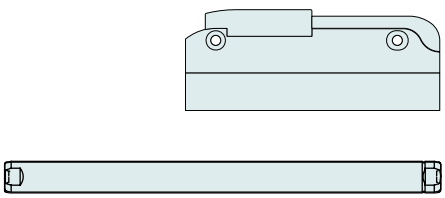

Item	Description	Item-No.
PS02-23Sx80F-HP-K	Stator HP, Cable -90°, 0°, +90°	0150-1285

PL01-12x480/440-HP	Slider 'High Performance'	0150-1524
PL02-12x480/440-HP	Slider 'heavy duty' 'High Performance	0150-2519
PL01-12x480/440-HP-L*	Slider 'High Performance L'	0150-3693

* With this slider, the motor specifications above change.

P02-23Sx80F/450x510-HP

Max. Stroke: 510 mm
Peak Force: 67 N

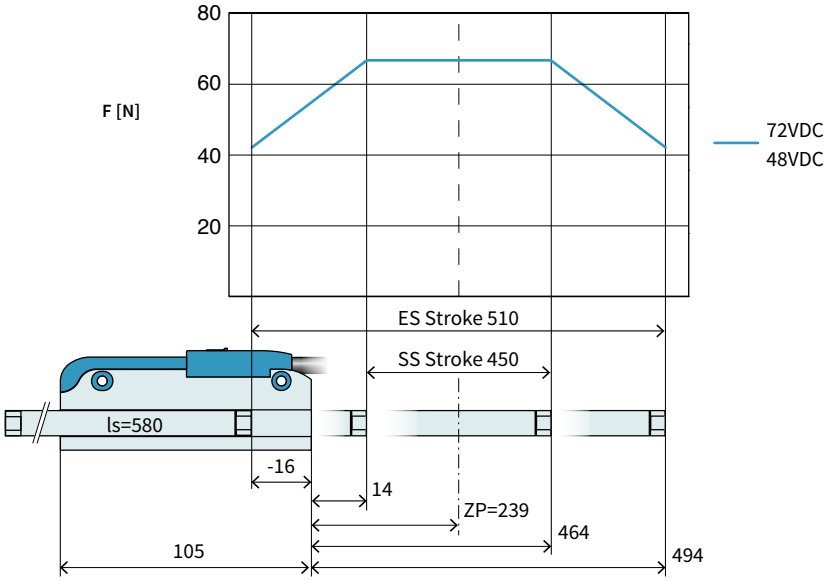

Dimensions in mm

Technical Data P02-23Sx80F/450x510-HP				
Stroke				
Standard Stroke (SS)	mm	(in)	450	(17.69)
Extended Stroke (ES)	mm	(in)	510	(20.1)
Force				
Max. Force @ 48VDC	N	(lbf)	67.1	(15.1)
Max. Force @ 72VDC	N	(lbf)	67.1	(15.1)
Max. Cont. Force [Passive cooling/ Fan / Fluid]	N	(lbf)	13 / 24 / -	(2.9 / 5.3 / -)
Max. Border Force relative	%		63	
Force Constant	N/A_{pk}	(lbf/A_{pk})	8.95	(2.01)
Velocity				
Max. Velocity @ 48VDC	m/s	(in/s)	4.9	(189.9)
Max. Velocity @ 72VDC	m/s	(in/s)	7.3	(289.9)
Position Detection				
Repeatability	mm	(in)	±0.05	(±0.002)
Linearity	%		± 0.15	
Electrical Data				
Max. Current @ 48VDC	A_{pk}		7.4	
Max. Current @ 72VDC	A_{pk}		7.4	
Max. Cont. Current [Passive cooling /Fan / Fluid]	A_{pk}		1.5 / 2.7 / -	
Thermal Data				
Max. Winding Temperature (Sensor)	°C		120	
Thermal Resistance [Passive cooling / Fan / Fluid]	°K/W		6.4 / 1.9 / -	
Thermal Time Constant [Passive cooling / Fan / Fluid]	s		830 / 250 / -	
Mechanical Data				
Slider Length	mm	(in)	580	(23)
Slider Mass	g	(lb)	480	(1.06)

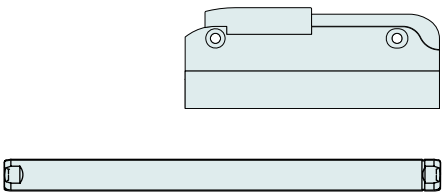

Item	Description	Item-No.
PS02-23Sx80F-HP-K	Stator HP, Cable -90°, 0°, +90°	0150-1285

PL01-12x580/540-HP	Slider 'High Performance'	0150-1525
PL02-12x580/540-HP	Slider 'heavy duty' 'High Performance	0150-2520
PL01-12x580/540-HP-L*	Slider 'High Performance L'	0150-3694

* With this slider, the motor specifications above change.

P02-23Sx80F/630x690-HP

Max. Stroke: 690 mm
Peak Force: 67 N

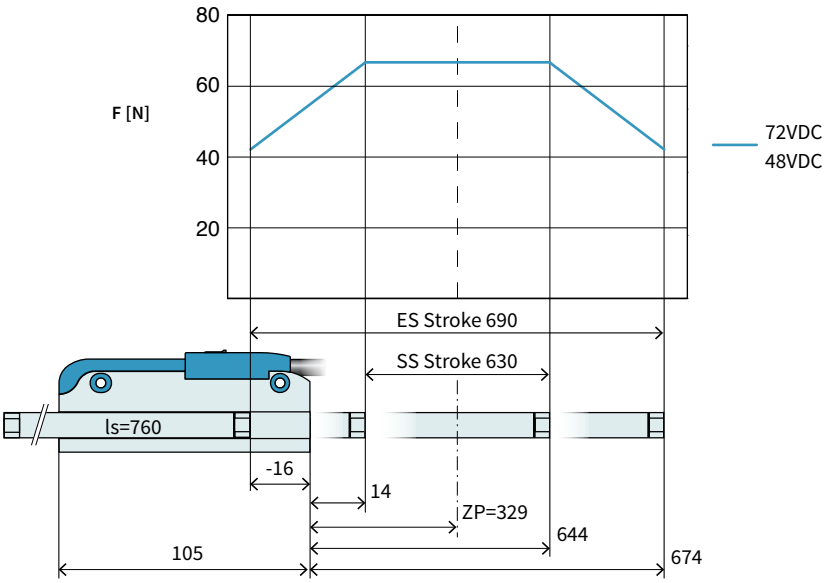

Dimensions in mm

Technical Data P02-23Sx80F/630x690-HP				
Stroke				
Standard Stroke (SS)	mm	(in)	630	(24.8)
Extended Stroke (ES)	mm	(in)	690	(27.19)
Force				
Max. Force @ 48VDC	N	(lbf)	67.1	(15.1)
Max. Force @ 72VDC	N	(lbf)	67.1	(15.1)
Max. Cont. Force [Passive cooling/ Fan / Fluid]	N	(lbf)	13 / 24 / -	(2.9 / 5.3 / -)
Max. Border Force relative	%		63	
Force Constant	N/A_{pk}	(lbf/A_{pk})	8.95	(2.01)
Velocity				
Max. Velocity @ 48VDC	m/s	(in/s)	4.9	(189.9)
Max. Velocity @ 72VDC	m/s	(in/s)	7.3	(289.9)
Position Detection				
Repeatability	mm	(in)	±0.05	(±0.002)
Linearity	%		± 0.15	
Electrical Data				
Max. Current @ 48VDC	A_{pk}		7.4	
Max. Current @ 72VDC	A_{pk}		7.4	
Max. Cont. Current [Passive cooling /Fan / Fluid]	A_{pk}		1.5 / 2.7 / -	
Thermal Data				
Max. Winding Temperature (Sensor)	°C		120	
Thermal Resistance [Passive cooling / Fan / Fluid]	°K/W		6.4 / 1.9 / -	
Thermal Time Constant [Passive cooling / Fan / Fluid]	s		830 / 250 / -	
Mechanical Data				
Slider Length	mm	(in)	760	(30)
Slider Mass	g	(lb)	630	(1.39)

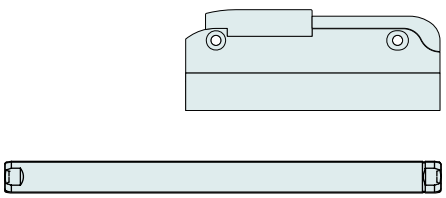

Item	Description	Item-No.
PS02-23Sx80F-HP-K	Stator HP, Cable -90°, 0°, +90°	0150-1285

PL01-12x760/720-HP	Slider 'High Performance'	0150-1526
PL02-12x760/720-HP	Slider 'heavy duty' 'High Performance	0150-2521
PL01-12x760/720-HP-L*	Slider 'High Performance L'	0150-3695

* With this slider, the motor specifications above change.

P02-23Sx80F/720x780-HP

Max. Stroke: 780 mm
Peak Force: 67 N

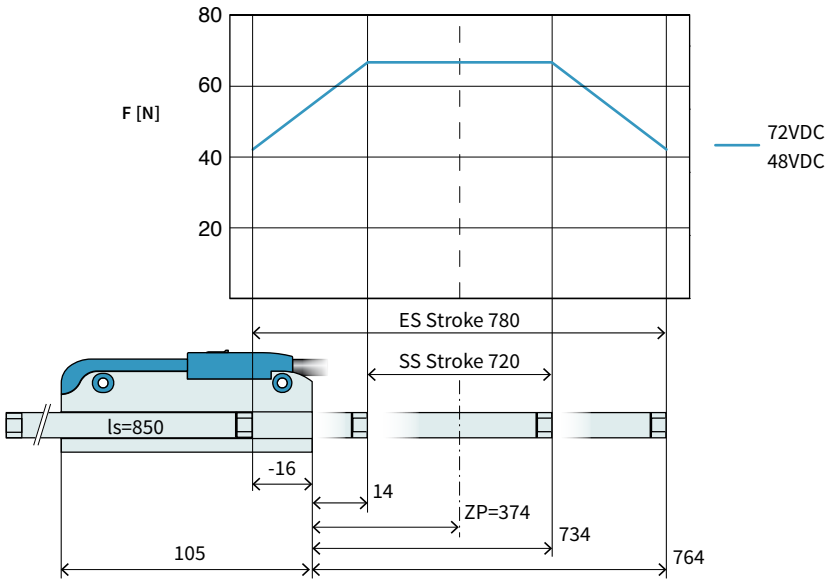

Dimensions in mm

Technical Data P02-23Sx80F/720x780-HP				
Stroke				
Standard Stroke (SS)	mm	(in)	720	(28.3)
Extended Stroke (ES)	mm	(in)	780	(30.69)
Force				
Max. Force @ 48VDC	N	(lbf)	67.1	(15.1)
Max. Force @ 72VDC	N	(lbf)	67.1	(15.1)
Max. Cont. Force [Passive cooling/ Fan / Fluid]	N	(lbf)	13 / 24 / -	(2.9 / 5.3 / -)
Max. Border Force relative	%		63	
Force Constant	N/A_{pk}	(lbf/A_{pk})	8.95	(2.01)
Velocity				
Max. Velocity @ 48VDC	m/s	(in/s)	4.9	(189.9)
Max. Velocity @ 72VDC	m/s	(in/s)	7.3	(289.9)
Position Detection				
Repeatability	mm	(in)	±0.05	(±0.002)
Linearity	%		± 0.15	
Electrical Data				
Max. Current @ 48VDC	A_{pk}		7.4	
Max. Current @ 72VDC	A_{pk}		7.4	
Max. Cont. Current [Passive cooling /Fan / Fluid]	A_{pk}		1.5 / 2.7 / -	
Thermal Data				
Max. Winding Temperature (Sensor)	°C		120	
Thermal Resistance [Passive cooling / Fan / Fluid]	°K/W		6.4 / 1.9 / -	
Thermal Time Constant [Passive cooling / Fan / Fluid]	s		830 / 250 / -	
Mechanical Data				
Slider Length	mm	(in)	850	(33)
Slider Mass	g	(lb)	700	(1.54)

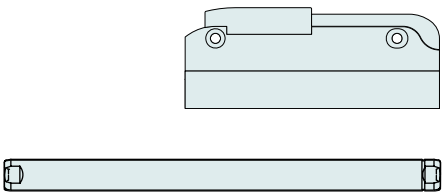

Item	Description	Item-No.
PS02-23Sx80F-HP-K	Stator HP, Cable -90°, 0°, +90°	0150-1285

PL01-12x850/810-HP	Slider 'High Performance'	0150-1527
PL02-12x850/810-HP	Slider 'heavy duty' 'High Performance	0150-2516
PL01-12x850/810-HP-L*	Slider 'High Performance L'	on request

* With this slider, the motor specifications above change.

3

Motor Cable

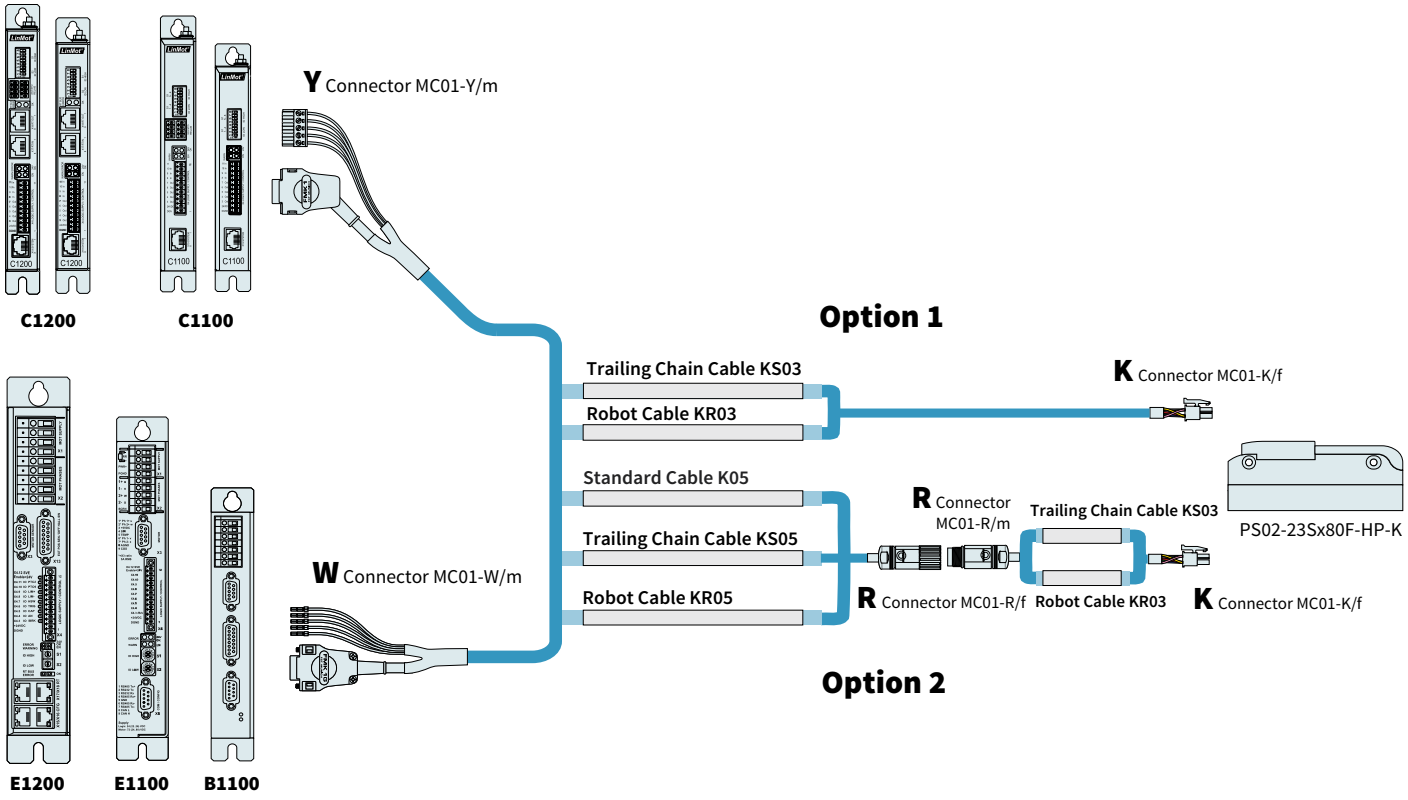

ORDERING INFORMATION

OPTION 1 – TRAILING CHAIN CABLE / ROBOT CABLE		
Item	**Description**	**Item-No.**
KS03-W-Fe/K-2	Trailing Chain Cable W-Fe/K 2 m	0150-2187
KS03-W-Fe/K-4	Trailing Chain Cable W-Fe/K 4 m	0150-2369
KS03-W-Fe/K-6	Trailing Chain Cable W-Fe/K 6 m	0150-2370
KS03-W-Fe/K-	Trailing Chain Cable W-Fe/K, Custom Length (max. 6m)	0150-3357
KS03-Y-Fe/K-2	Trailing Chain Cable Y-Fe/K, 2 m	0150-2446
KS03-Y-Fe/K-4	Trailing Chain Cable Y-Fe/K, 4 m	0150-2447
KS03-Y-Fe/K-6	Trailing Chain Cable Y-Fe/K, 6 m	0150-2448
KS03-Y-Fe/K-	Trailing Chain Cable Y-Fe/K, Custom Length (max. 6m)	0150-3516
KR03-Y-Fe/K-	Robot Cable KR03-Y-Fe/K, Custom Length (max. 6m)	0150-3718
KR03-W-Fe/K-	Robot Cable KR03-W-Fe/K, Custom Length (max. 6m)	0150-3755

OPTION 2 – STANDARD CABLE		
Item	**Description**	**Item-No.**
K05-W/R-2	Motor Cable W/R, 2 m	0150-2119
K05-W/R-4	Motor Cable W/R, 4 m	0150-2120
K05-W/R-6	Motor Cable W/R, 6 m	0150-2121
K05-W/R-8	Motor Cable W/R, 8 m	0150-2122
K05-W/R-	Motor Cable W/R, Custom length	0150-3262
K05-Y/R-2	Motor Cable Y/R, 2 m	0150-2421
K05-Y/R-4	Motor Cable Y/R, 4 m	0150-2422
K05-Y/R-6	Motor Cable Y/R, 6 m	0150-2423
K05-Y/R-8	Motor Cable Y/R, 8 m	0150-2424
K05-Y-Fe/R-	Motor Cable Y/R, Custom length	0150-3501

OPTION 2 – TRAILING CHAIN CABLE		
Item	**Description**	**Item-No.**
KS05-W/R-4	Trailing Chain Cable W/R, 4 m	0150-2106
KS05-W/R-6	Trailing Chain Cable W/R, 6 m	0150-2131
KS05-W/R-8	Trailing Chain Cable W/R, 8 m	0150-2107
KS05-W/R-	Trailing Chain Cable W/R, Custom length	0150-3256
KS05-Y/R-4	Trailing Chain Cable Y/R, 4 m	0150-2433
KS05-Y/R-6	Trailing Chain Cable Y/R, 6 m	0150-2434
KS05-Y/R-8	Trailing Chain Cable Y/R, 8 m	0150-2435
KS05-Y/R-	Trailing Chain Cable Y/R, Custom length	0150-3507

OPTION 2 – ROBOT CABLE		
Item	**Description**	**Item-No.**
KR05-W/R-	Robot Cable KR05-W/R, Custom length	0150-3336
KR05-Y-Fe/R-	Robot Cable KR05-Y-Fe/R, Custom length	0150-3512

OPTION 2 – TRAILING CHAIN CABLE / ROBOT CABLE		
Item	**Description**	**Item-No.**
KS03-R/K-1	Trailing Chain Cable R/K 1 m	0150-2185
KS03-R/K-2	Trailing Chain Cable R/K 2 m	0150-2186
KS03-R/K-	Trailing Chain Cable R/K, Custom length (max. 6m)	0150-3530
KR03-R/K-	Robot Cable R/K, Custom length (max. 6m)	0150-3754

CONNECTOR & CABLE (INDIVIDUAL)		
Item	**Description**	**Item-No.**
MC01-W/m	Motor Connector W/m	0150-3140
MC01-Y-Fe/m	Motor Connector Y-Fe/m	0150-3289
MC01-R/f	Motor Connector R/f	0150-3129
MC01-K/f	Motor Connector K (f)	0150-3345
K05-04/05	Motor Cable per m	0150-1920
KS05-04/05	Trailing Chain Cable per m	0150-1938
KR05-04/05	Robot Cable per m	0150-1846
KS03-09	Trailing Chain Cable per m (max. 6m connection length)	0150-2182
KR03-09	Robot Cable per m	0150-2801

SLIDER MOUNTING





Item	Description	Item-No.
PLF01-12	Fixed End Washer Set for 12 mm sliders	0150-3085
PLF01-12-Ni	Fixed Bearing Set for 12 mm sliders, nickel-plated	0150-3573
PLL02-12	Floating Bearing Set for PL01-12 sliders	0150-3111

FIND MORE PRODUCT DETAILS IN THE CHAPTER "ACCESSORIES".

EXTERNAL POSITION SENSORS

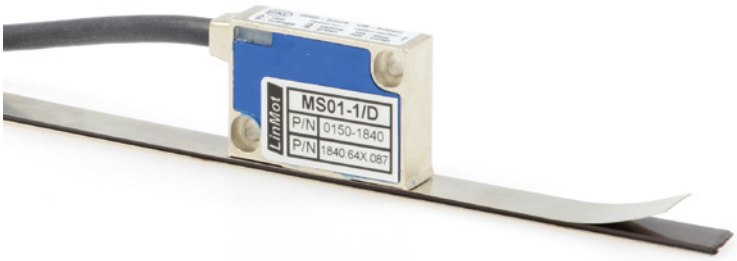

Item	Description	Item-No.
MS01-1/D	Linear Encoder 1µm, A/B (for 1mm incremental strip)	0150-1840
MB01-1000	Magnetic incremental strip for MS01-1/D, per cm	0150-1963
KS025-D/D-Encoder	Encoder Cable (Length in m)	0150-3166
KS025-D/D15-Encoder	Encoder Cable (Length in m)	0150-3168

FIND MORE PRODUCT DETAILS IN THE CHAPTER "ACCESSORIES".



Item	Description	Item-No.
MS01-1/D-SSI	Linear Encoder 1µm, A/B (for 1 mmabsolute strip)	0150-2095
MB01-1000-ABS	Magnetic absolute strip for MS01-1/D-SSI (per cm)	0150-2096
EC01-ABS/ENC-12-S	MS01-1/D-SSI Encoder connector straight	0150-3616
KSS01-12-D15/ABS-ENC	Special cable for MS01-1/D-SSI on C1100/C1200/C1400/E1200/E1400 Drives	0150-3652

FIND MORE PRODUCT DETAILS IN THE CHAPTER "ACCESSORIES".

LINEAR MOTORS P01-23x160



- Highly dynamic drives
- Wide stroke range
- Available with cable outlet or with rotatable connector
- Optional with air cooling
- Wide range of applications in handling modules as well as in plant and machine construction

3

LINEAR MOTORS P01-23x160

Technical Data ____ **115**

Motor Specifications

P01-23x160/40x100-LC **118**

P01-23x160/20x120-LC **119**

P01-23x160/20x160-LC **120**

P01-23x160/80x220-LC **121**

P01-23x160/140x280-LC **122**

P01-23x160/210x350-LC **123**

P01-23x160/270x410-LC **124**

P01-23x160/370x510-LC **125**

P01-23x160/550x690-LC **126**

P01-23x160/640x780-LC **127**

Linear Guides ____ **128**

Accessories ____ **129**



MOTOR FAMILY P01-23x160

Technical Data				
Stroke				
Standard Stroke (SS)	mm	(in)	≤ 640	(≤ 25.19)
Extended Stroke (ES)	mm	(in)	≤ 780	(≤ 30.69)
Force				
Max. Force @ 48VDC	N	(lbf)	41.6	(9.35)
Max. Force @ 72VDC	N	(lbf)	62.4	(14)
Max. Cont. Force [Passive cooling/ Fan / Fluid]	N	(lbf)	16 / 30 / -	(3.6 / 6.8 / -)
Max. Border Force relative	%		≤ 75	
Force Constant	N/A_{pk}	(lbf/A_{pk})	22	(4.95)
Velocity				
Max. Velocity @ 48VDC	m/s	(in/s)	2.7	(109.9)
Max. Velocity @ 72VDC	m/s	(in/s)	3.9	(159.9)
Position Detection				
Position Resolution	mm	(in)	0.002	(0.0001)
Repeatability	mm	(in)	±0.05	(±0.002)
Position Resolution with ES	mm	(in)	0.001	(0.00004)
Repeatability with ES	mm	(in)	±0.01	(±0.0004)
Linearity with ES	mm	(in)	±0.01	(±0.0004)
Electrical Data				
Max. Current @ 48VDC	A_{pk}		1.8	
Max. Current @ 72VDC	A_{pk}		2.8	
Max. Cont. Current [Passive cooling /Fan / Fluid]	A_{pk}		0.73 / 1.4 / -	
Terminal Resistance 25 °C / 120 °C	Ohm		21 / 28	
Terminal Inductivity	mH		2.7	
Magnetic Period	mm	(in)	20	(0.78)
Thermal Data				
Max. Winding Temperature (Sensor)	°C		90	
Thermal Resistance [Passive cooling / Fan / Fluid]	°K/W		3.6 / 1 / -	
Thermal Time Constant [Passive cooling / Fan / Fluid]	s		720 / 200 / -	
Mechanical Data				
Stator Diameter	mm	(in)	23	(0.91)
Stator Length [Connector type / Cable type]	mm	(in)	242 / 257	(9.5 / 10)
Stator Mass	g	(lb)	450	(0.99)
Slider Diameter	mm	(in)	12	(0.47)
Slider Length	mm	(in)	170 - 850	(6.7 - 33)
Slider Mass	g	(lb)	130 - 700	(0.28 - 1.5)
IP Code			IP 65	

STATOR CONNECTOR TYPE

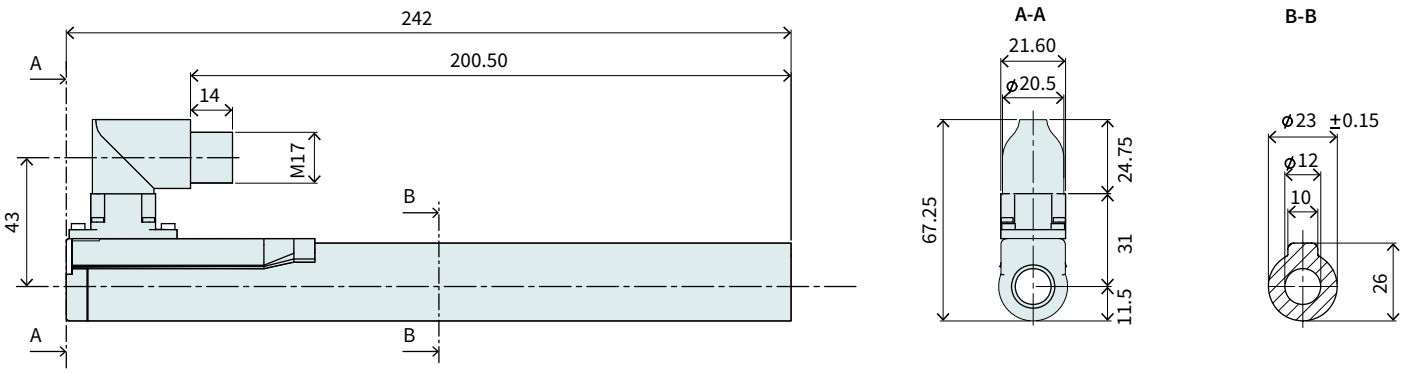

Item	Description	Item-No.
PS01-23x160-R	Stator with IP67 Connector M17/9(m)	0150-1234

STATOR CABLE TYPE

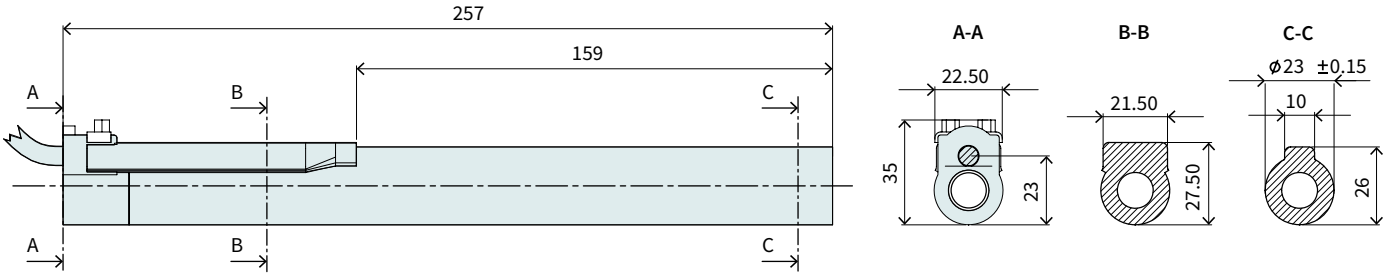

Item	Description	Item-No.
PS01-23x160-R20	Stator, 0.2 m cable, IP67 con. M17/9(m)	0150-1242
PS01-23x160	Stator, cable 1m, Connector D-Sub-9(m)	0150-1202

CONNECTOR

Motor Connector Wiring	PS01-23x160-R PS01-23x160-R20	PS01-23x160	Wire color motor cable
	R-Connector	D-Connector	
Ph 1+	1	1	red
Ph 1-	2	6	pink
Ph 2+	3	2	blue
Ph 2-	4	7	grey
+5VDC	A	3	white
GND	B	8	inner shield
Sin	C	4	yellow
Cos	D	9	green
Temp.	E	5	black
Shield	Housing	Housing	outer Shield

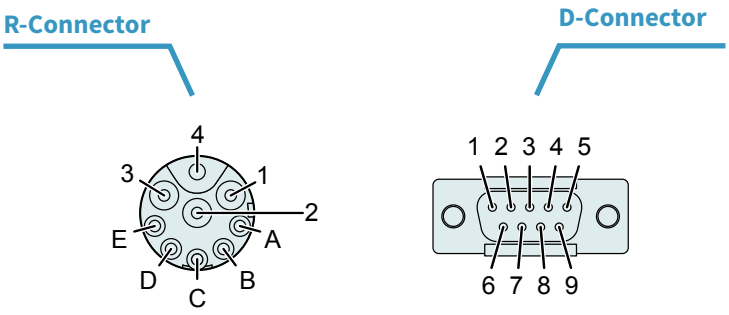

View: Motor Connector, plug side

SLIDER

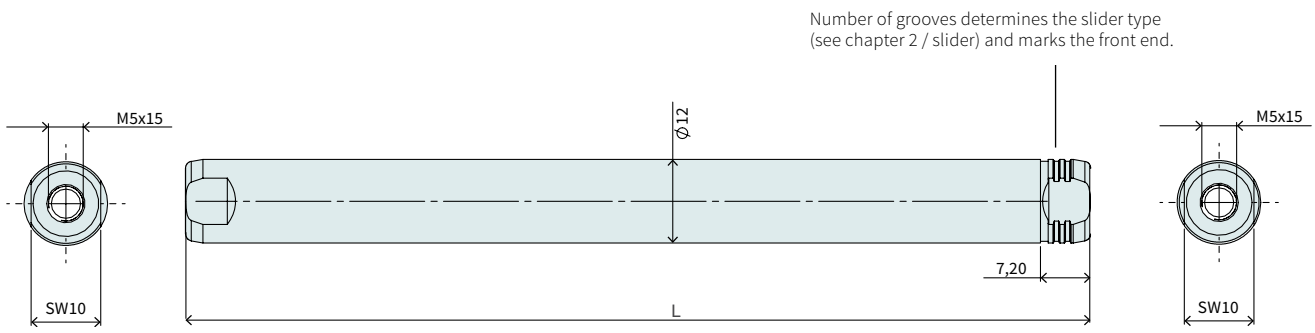

Slider Standard				
Item	Description	Max. Stroke [mm]	Standard Stroke [mm]	Item-No.
PL01-12x170/130-LC	Slider 'standard LC'	100	40	0150-2581
PL01-12x190/150-LC	Slider 'standard LC'	120	60	0150-2582
PL01-12x230/190-LC	Slider 'standard LC'	160	100	0150-2598
PL01-12x290/250-LC	Slider 'standard LC'	220	160	0150-2583
PL01-12x350/310-LC	Slider 'standard LC'	280	220	0150-2584
PL01-12x420/380-LC	Slider 'standard LC'	350	290	0150-2585
PL01-12x480/440-LC	Slider 'standard LC'	410	350	0150-2586
PL01-12x580/540-LC	Slider 'standard LC'	510	450	0150-2587
PL01-12x760/720-LC	Slider 'standard LC'	690	630	0150-2589
PL01-12x850/810-LC	Slider 'standard LC'	780	720	0150-2588

Slider Heavy Duty				
Item	Description	Max. Stroke [mm]	Standard Stroke [mm]	Item-No.
PL02-12x170/130-LC	Slider 'heavy duty LC'	100	40	0150-2591
PL02-12x190/150-LC	Slider 'heavy duty LC'	120	60	0150-2592
PL02-12x230/190-LC	Slider 'heavy duty LC'	160	100	0150-2599
PL02-12x290/250-LC	Slider 'heavy duty LC'	220	160	0150-2593
PL02-12x350/310-LC	Slider 'heavy duty LC'	280	220	0150-2594
PL02-12x420/380-LC	Slider 'heavy duty LC'	350	290	0150-2595
PL02-12x480/440-LC	Slider 'heavy duty LC'	410	350	0150-2597
PL02-12x580/540-LC	Slider 'heavy duty LC'	510	450	0150-2596
PL02-12x760/720-LC	Slider 'heavy duty LC'	690	630	on request
PL02-12x850/810-LC	Slider 'heavy duty LC'	780	720	on request

P01-23x160/40x100-LC

Max. Stroke: 100 mm
Peak Force: 47 N

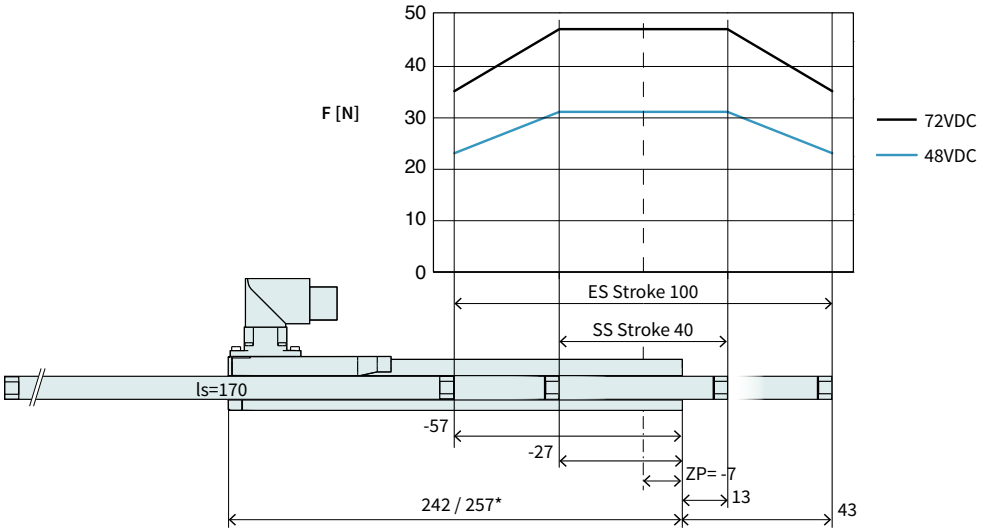

Dimensions in mm
*Cable Type

Technical Data P01-23x160/40x100-LC				
Stroke				
Standard Stroke (SS)	mm	(in)	40	(1.57)
Extended Stroke (ES)	mm	(in)	100	(3.93)
Force				
Max. Force @ 48VDC	N	(lbf)	31.2	(7.01)
Max. Force @ 72VDC	N	(lbf)	46.8	(10.5)
Max. Cont. Force [Passive cooling/ Fan / Fluid]	N	(lbf)	12 / 23 / -	(2.7 / 5.1 / -)
Max. Border Force relative	%		75	
Force Constant	N/A_{pk}	(lbf/A_{pk})	16.5	(3.71)
Velocity				
Max. Velocity @ 48VDC	m/s	(in/s)	2.7	(109.9)
Max. Velocity @ 72VDC	m/s	(in/s)	3.9	(159.9)
Position Detection				
Repeatability	mm	(in)	±0.05	(±0.002)
Linearity	%		± 0.35	
Electrical Data				
Max. Current @ 48VDC	A_{pk}		1.8	
Max. Current @ 72VDC	A_{pk}		2.8	
Max. Cont. Current [Passive cooling /Fan / Fluid]	A_{pk}		0.73 / 1.4 / -	
Thermal Data				
Max. Winding Temperature (Sensor)	°C		90	
Thermal Resistance [Passive cooling / Fan / Fluid]	°K/W		3.6 / 1 / -	
Thermal Time Constant [Passive cooling / Fan / Fluid]	s		720 / 200 / -	
Mechanical Data				
Slider Length	mm	(in)	170	(6.7)
Slider Mass	g	(lb)	130	(0.29)

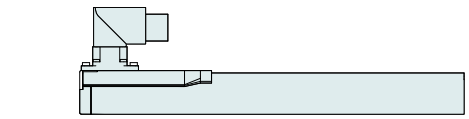





Item	Description	Item-No.
PS01-23x160-R	Stator with IP67 Connector M17/9(m)	0150-1234
PS01-23x160-R20	Stator, 0.2 m cable, IP67 con. M17/9(m)	0150-1242
PS01-23x160	Stator, cable 1m, Connector D-Sub-9(m)	0150-1202
PL01-12x170/130-LC	Slider 'standard LC'	0150-2581
PL02-12x170/130-LC	Slider 'heavy duty LC'	0150-2591

P01-23x160/20x120-LC

Max. Stroke: 120 mm
Peak Force: 55 N

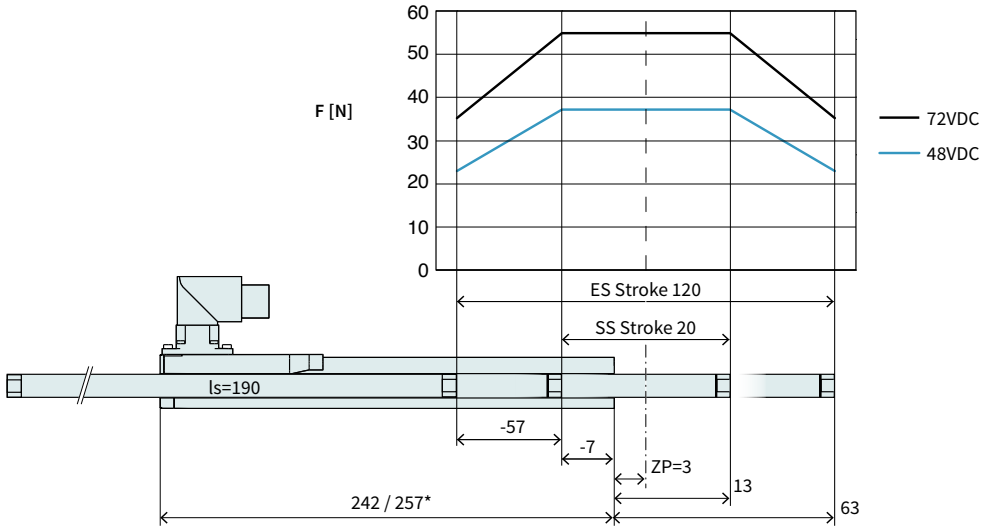

Dimensions in mm
*Cable Type

Technical Data P01-23x160/20x120-LC				
Stroke				
Standard Stroke (SS)	mm	(in)	20	(0.78)
Extended Stroke (ES)	mm	(in)	120	(4.71)
Force				
Max. Force @ 48VDC	N	(lbf)	36.4	(8.18)
Max. Force @ 72VDC	N	(lbf)	54.6	(12.3)
Max. Cont. Force [Passive cooling/ Fan / Fluid]	N	(lbf)	14 / 27 / -	(3.2 / 6 / -)
Max. Border Force relative	%		64	
Force Constant	N/A_{pk}	(lbf/A_{pk})	19.3	(4.33)
Velocity				
Max. Velocity @ 48VDC	m/s	(in/s)	2.2	(89.9)
Max. Velocity @ 72VDC	m/s	(in/s)	3.3	(139.9)
Position Detection				
Repeatability	mm	(in)	±0.05	(±0.002)
Linearity	%		± 0.3	
Electrical Data				
Max. Current @ 48VDC	A_{pk}		1.8	
Max. Current @ 72VDC	A_{pk}		2.8	
Max. Cont. Current [Passive cooling /Fan / Fluid]	A_{pk}		0.73 / 1.4 / -	
Thermal Data				
Max. Winding Temperature (Sensor)	°C		90	
Thermal Resistance [Passive cooling / Fan / Fluid]	°K/W		3.6 / 1 / -	
Thermal Time Constant [Passive cooling / Fan / Fluid]	s		720 / 200 / -	
Mechanical Data				
Slider Length	mm	(in)	190	(7.5)
Slider Mass	g	(lb)	145	(0.32)

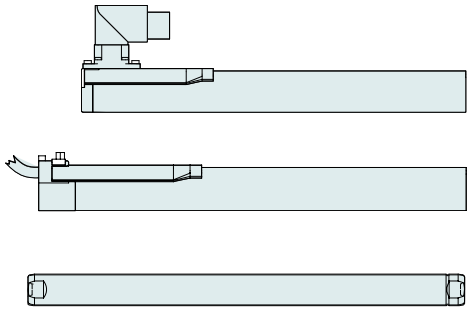

Item	Description	Item-No.
PS01-23x160-R	Stator with IP67 Connector M17/9(m)	0150-1234
PS01-23x160-R20	Stator, 0.2 m cable, IP67 con. M17/9(m)	0150-1242
PS01-23x160	Stator, cable 1m, Connector D-Sub-9(m)	0150-1202
PL01-12x190/150-LC	Slider 'standard LC'	0150-2582
PL02-12x190/150-LC	Slider 'heavy duty LC'	0150-2592

P01-23x160/20x160-LC

Max. Stroke: 160 mm
Peak Force: 62 N

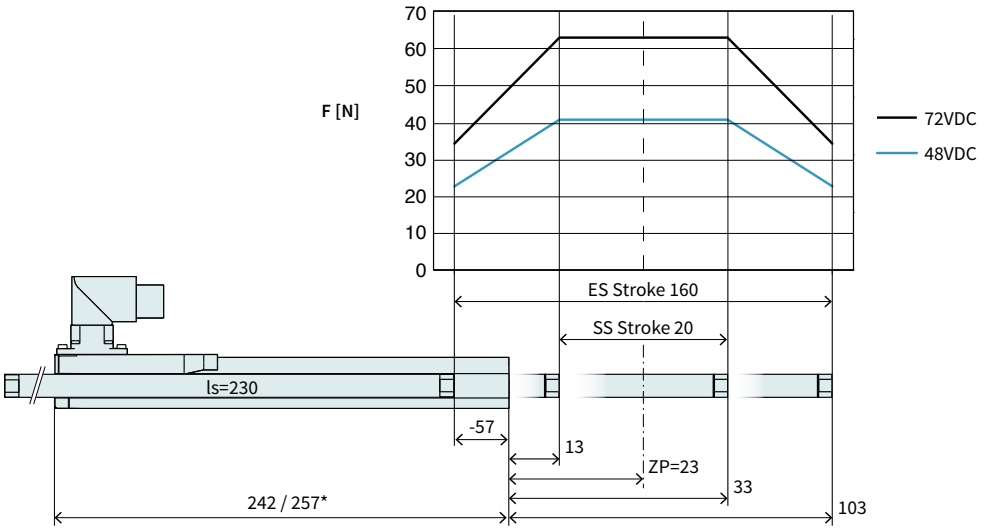

Dimensions in mm
*Cable Type

Technical Data P01-23x160/20x160-LC				
Stroke				
Standard Stroke (SS)	mm	(in)	20	(0.78)
Extended Stroke (ES)	mm	(in)	160	(6.29)
Force				
Max. Force @ 48VDC	N	(lbf)	41.6	(9.35)
Max. Force @ 72VDC	N	(lbf)	62.4	(14)
Max. Cont. Force [Passive cooling/ Fan / Fluid]	N	(lbf)	16 / 30 / -	(3.6 / 6.8 / -)
Max. Border Force relative	%		56	
Force Constant	N/A_{pk}	(lbf/A_{pk})	22	(4.95)
Velocity				
Max. Velocity @ 48VDC	m/s	(in/s)	1.9	(78.9)
Max. Velocity @ 72VDC	m/s	(in/s)	2.9	(119.9)
Position Detection				
Repeatability	mm	(in)	±0.05	(±0.002)
Linearity	%		± 0.25	
Electrical Data				
Max. Current @ 48VDC	A_{pk}		1.8	
Max. Current @ 72VDC	A_{pk}		2.8	
Max. Cont. Current [Passive cooling /Fan / Fluid]	A_{pk}		0.73 / 1.4 / -	
Thermal Data				
Max. Winding Temperature (Sensor)	°C		90	
Thermal Resistance [Passive cooling / Fan / Fluid]	°K/W		3.6 / 1 / -	
Thermal Time Constant [Passive cooling / Fan / Fluid]	s		720 / 200 / -	
Mechanical Data				
Slider Length	mm	(in)	230	(9.1)
Slider Mass	g	(lb)	180	(0.4)

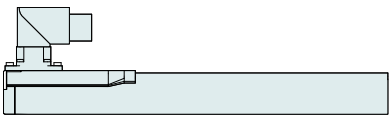

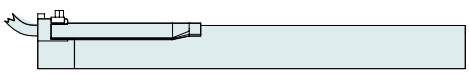



Item	Description	Item-No.
PS01-23x160-R	Stator with IP67 Connector M17/9(m)	0150-1234
PS01-23x160-R20	Stator, 0.2 m cable, IP67 con. M17/9(m)	0150-1242
PS01-23x160	Stator, cable 1m, Connector D-Sub-9(m)	0150-1202
PL01-12x230/190-LC	Slider 'standard LC'	0150-2598
PL02-12x230/190-LC	Slider 'heavy duty LC'	0150-2599

P01-23x160/80x220-LC

Max. Stroke: 220 mm
Peak Force: 62 N

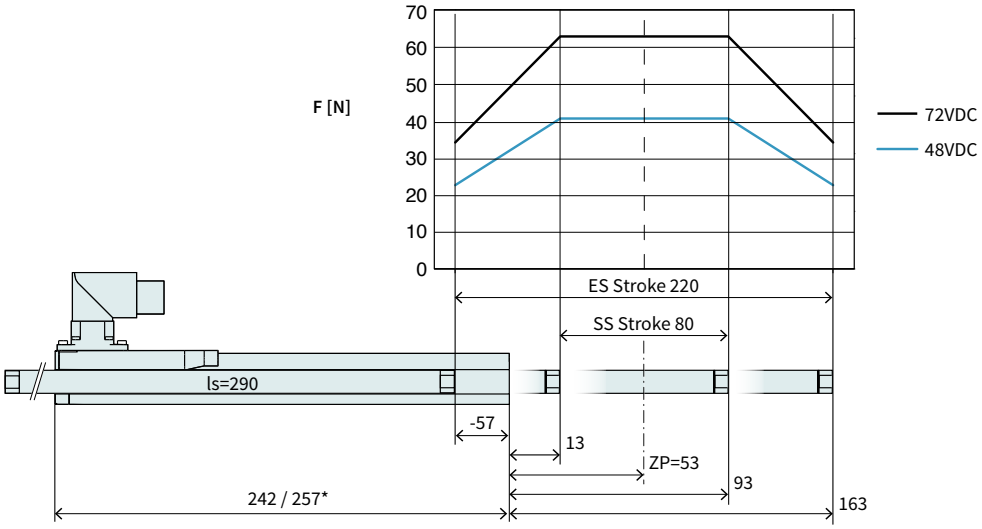

Dimensions in mm
*Cable Type

Technical Data P01-23x160/80x220-LC				
Stroke				
Standard Stroke (SS)	mm	(in)	80	(3.14)
Extended Stroke (ES)	mm	(in)	220	(8.65)
Force				
Max. Force @ 48VDC	N	(lbf)	41.6	(9.35)
Max. Force @ 72VDC	N	(lbf)	62.4	(14)
Max. Cont. Force [Passive cooling/ Fan / Fluid]	N	(lbf)	16 / 30 / -	(3.6 / 6.8 / -)
Max. Border Force relative	%		56	
Force Constant	N/A_{pk}	(lbf/A_{pk})	22	(4.95)
Velocity				
Max. Velocity @ 48VDC	m/s	(in/s)	1.9	(78.9)
Max. Velocity @ 72VDC	m/s	(in/s)	2.9	(119.9)
Position Detection				
Repeatability	mm	(in)	±0.05	(±0.002)
Linearity	%		± 0.2	
Electrical Data				
Max. Current @ 48VDC	A_{pk}		1.8	
Max. Current @ 72VDC	A_{pk}		2.8	
Max. Cont. Current [Passive cooling /Fan / Fluid]	A_{pk}		0.73 / 1.4 / -	
Thermal Data				
Max. Winding Temperature (Sensor)	°C		90	
Thermal Resistance [Passive cooling / Fan / Fluid]	°K/W		3.6 / 1 / -	
Thermal Time Constant [Passive cooling / Fan / Fluid]	s		720 / 200 / -	
Mechanical Data				
Slider Length	mm	(in)	290	(11)
Slider Mass	g	(lb)	230	(0.51)

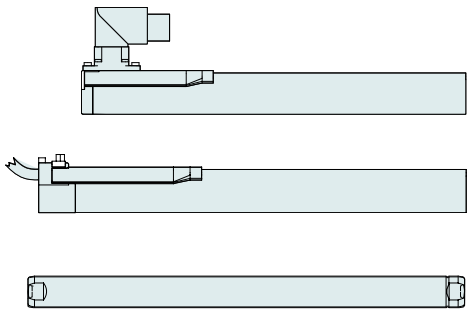

Item	Description	Item-No.
PS01-23x160-R	Stator with IP67 Connector M17/9(m)	0150-1234
PS01-23x160-R20	Stator, 0.2 m cable, IP67 con. M17/9(m)	0150-1242
PS01-23x160	Stator, cable 1m, Connector D-Sub-9(m)	0150-1202
PL01-12x290/250-LC	Slider 'standard LC'	0150-2583
PL02-12x290/250-LC	Slider 'heavy duty LC'	0150-2593

P01-23x160/140x280-LC

Max. Stroke: 280 mm
Peak Force: 62 N

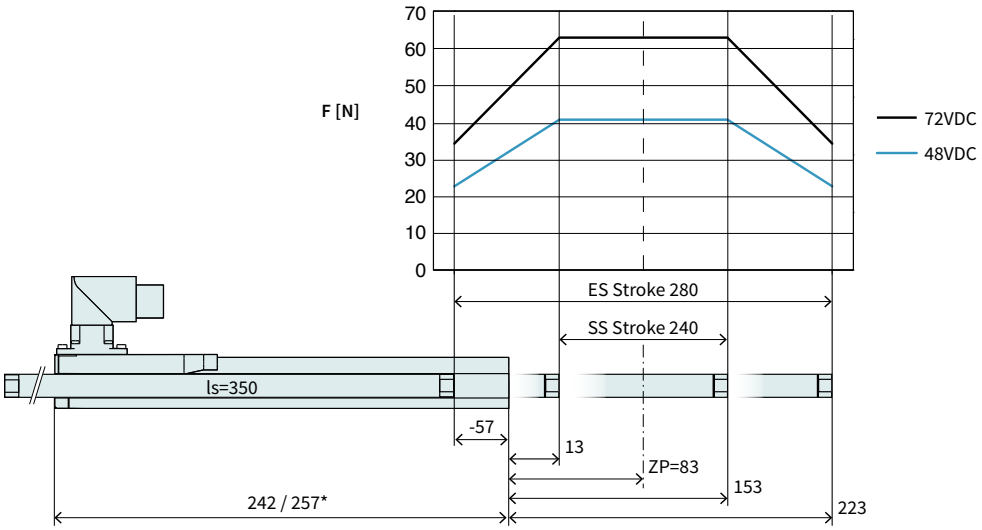

Dimensions in mm
*Cable Type

Technical Data P01-23x160/140x280-LC				
Stroke				
Standard Stroke (SS)	mm	(in)	140	(5.5)
Extended Stroke (ES)	mm	(in)	280	(10.99)
Force				
Max. Force @ 48VDC	N	(lbf)	41.6	(9.35)
Max. Force @ 72VDC	N	(lbf)	62.4	(14)
Max. Cont. Force [Passive cooling/ Fan / Fluid]	N	(lbf)	16 / 30 / -	(3.6 / 6.8 / -)
Max. Border Force relative	%		56	
Force Constant	N/A_{pk}	(lbf/A_{pk})	22	(4.95)
Velocity				
Max. Velocity @ 48VDC	m/s	(in/s)	1.9	(78.9)
Max. Velocity @ 72VDC	m/s	(in/s)	2.9	(119.9)
Position Detection				
Repeatability	mm	(in)	±0.05	(±0.002)
Linearity	%		± 0.2	
Electrical Data				
Max. Current @ 48VDC	A_{pk}		1.8	
Max. Current @ 72VDC	A_{pk}		2.8	
Max. Cont. Current [Passive cooling /Fan / Fluid]	A_{pk}		0.73 / 1.4 / -	
Thermal Data				
Max. Winding Temperature (Sensor)	°C		90	
Thermal Resistance [Passive cooling / Fan / Fluid]	°K/W		3.6 / 1 / -	
Thermal Time Constant [Passive cooling / Fan / Fluid]	s		720 / 200 / -	
Mechanical Data				
Slider Length	mm	(in)	350	(14)
Slider Mass	g	(lb)	280	(0.62)

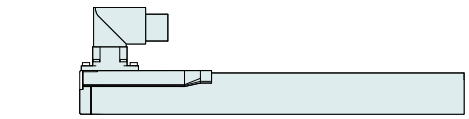





Item	Description	Item-No.
PS01-23x160-R	Stator with IP67 Connector M17/9(m)	0150-1234
PS01-23x160-R20	Stator, 0.2 m cable, IP67 con. M17/9(m)	0150-1242
PS01-23x160	Stator, cable 1m, Connector D-Sub-9(m)	0150-1202
PL01-12x350/310-LC	Slider 'standard LC'	0150-2584
PL02-12x350/310-LC	Slider 'heavy duty LC'	0150-2594

P01-23x160/210x350-LC

Max. Stroke: 350 mm
Peak Force: 62 N

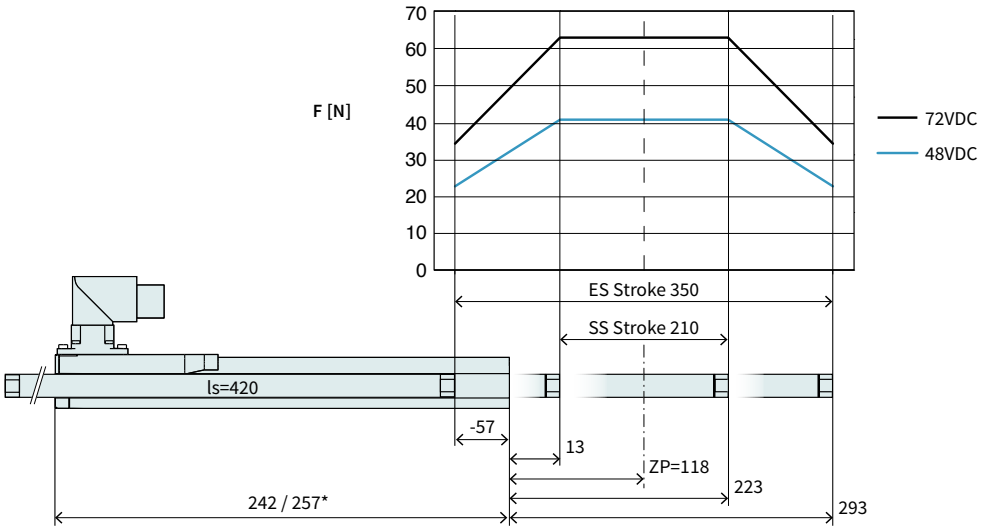

Dimensions in mm
*Cable Type

Technical Data P01-23x160/210x350-LC				
Stroke				
Standard Stroke (SS)	mm	(in)	210	(8.26)
Extended Stroke (ES)	mm	(in)	350	(13.8)
Force				
Max. Force @ 48VDC	N	(lbf)	41.6	(9.35)
Max. Force @ 72VDC	N	(lbf)	62.4	(14)
Max. Cont. Force [Passive cooling/ Fan / Fluid]	N	(lbf)	16 / 30 / -	(3.6 / 6.8 / -)
Max. Border Force relative	%		56	
Force Constant	N/A_{pk}	(lbf/A_{pk})	22	(4.95)
Velocity				
Max. Velocity @ 48VDC	m/s	(in/s)	1.9	(78.9)
Max. Velocity @ 72VDC	m/s	(in/s)	2.9	(119.9)
Position Detection				
Repeatability	mm	(in)	±0.05	(±0.002)
Linearity	%		± 0.15	
Electrical Data				
Max. Current @ 48VDC	A_{pk}		1.8	
Max. Current @ 72VDC	A_{pk}		2.8	
Max. Cont. Current [Passive cooling /Fan / Fluid]	A_{pk}		0.73 / 1.4 / -	
Thermal Data				
Max. Winding Temperature (Sensor)	°C		90	
Thermal Resistance [Passive cooling / Fan / Fluid]	°K/W		3.6 / 1 / -	
Thermal Time Constant [Passive cooling / Fan / Fluid]	s		720 / 200 / -	
Mechanical Data				
Slider Length	mm	(in)	420	(17)
Slider Mass	g	(lb)	340	(0.75)

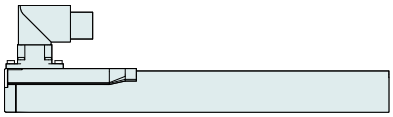

Item	Description	Item-No.
PS01-23x160-R	Stator with IP67 Connector M17/9(m)	0150-1234

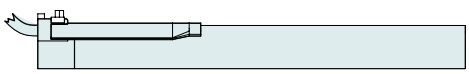

PS01-23x160-R20	Stator, 0.2 m cable, IP67 con. M17/9(m)	0150-1242
PS01-23x160	Stator, cable 1m, Connector D-Sub-9(m)	0150-1202



PL01-12x420/380-LC	Slider 'standard LC'	0150-2585
PL02-12x420/380-LC	Slider 'heavy duty LC'	0150-2595

P01-23x160/270x410-LC

Max. Stroke: 410 mm
Peak Force: 62 N

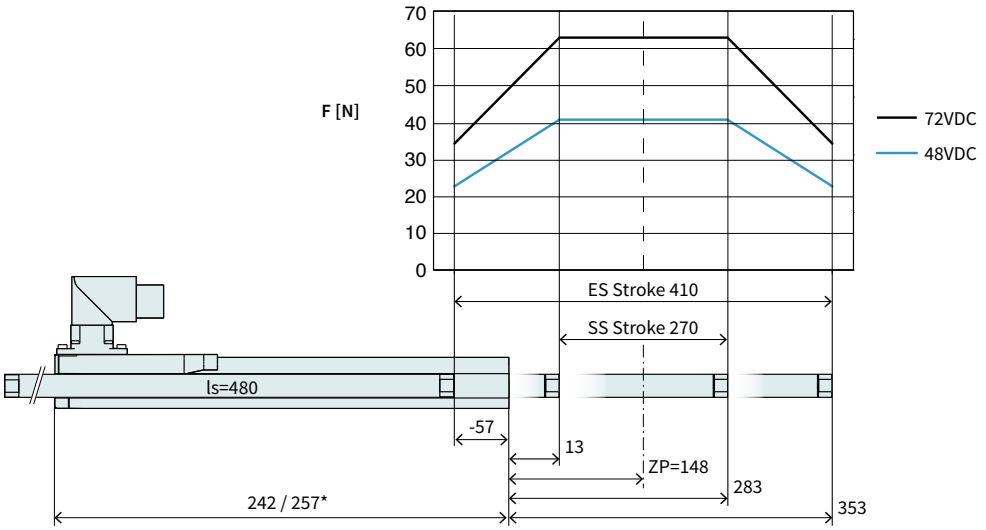

Dimensions in mm
*Cable Type

Technical Data P01-23x160/270x410-LC				
Stroke				
Standard Stroke (SS)	mm	(in)	270	(10.59)
Extended Stroke (ES)	mm	(in)	410	(16.1)
Force				
Max. Force @ 48VDC	N	(lbf)	41.6	(9.35)
Max. Force @ 72VDC	N	(lbf)	62.4	(14)
Max. Cont. Force [Passive cooling/ Fan / Fluid]	N	(lbf)	16 / 30 / -	(3.6 / 6.8 / -)
Max. Border Force relative	%		56	
Force Constant	N/A_{pk}	(lbf/A_{pk})	22	(4.95)
Velocity				
Max. Velocity @ 48VDC	m/s	(in/s)	1.9	(78.9)
Max. Velocity @ 72VDC	m/s	(in/s)	2.9	(119.9)
Position Detection				
Repeatability	mm	(in)	±0.05	(±0.002)
Linearity	%		± 0.15	
Electrical Data				
Max. Current @ 48VDC	A_{pk}		1.8	
Max. Current @ 72VDC	A_{pk}		2.8	
Max. Cont. Current [Passive cooling /Fan / Fluid]	A_{pk}		0.73 / 1.4 / -	
Thermal Data				
Max. Winding Temperature (Sensor)	°C		90	
Thermal Resistance [Passive cooling / Fan / Fluid]	°K/W		3.6 / 1 / -	
Thermal Time Constant [Passive cooling / Fan / Fluid]	s		720 / 200 / -	
Mechanical Data				
Slider Length	mm	(in)	480	(19)
Slider Mass	g	(lb)	390	(0.86)

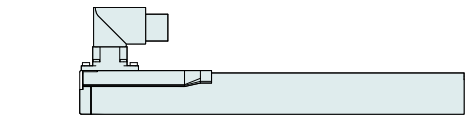





Item	Description	Item-No.
PS01-23x160-R	Stator with IP67 Connector M17/9(m)	0150-1234
PS01-23x160-R20	Stator, 0.2 m cable, IP67 con. M17/9(m)	0150-1242
PS01-23x160	Stator, cable 1m, Connector D-Sub-9(m)	0150-1202
PL01-12x480/440-LC	Slider 'standard LC'	0150-2586
PL02-12x480/440-LC	Slider 'heavy duty LC'	0150-2597

P01-23x160/370x510-LC

Max. Stroke: 510 mm
Peak Force: 62 N

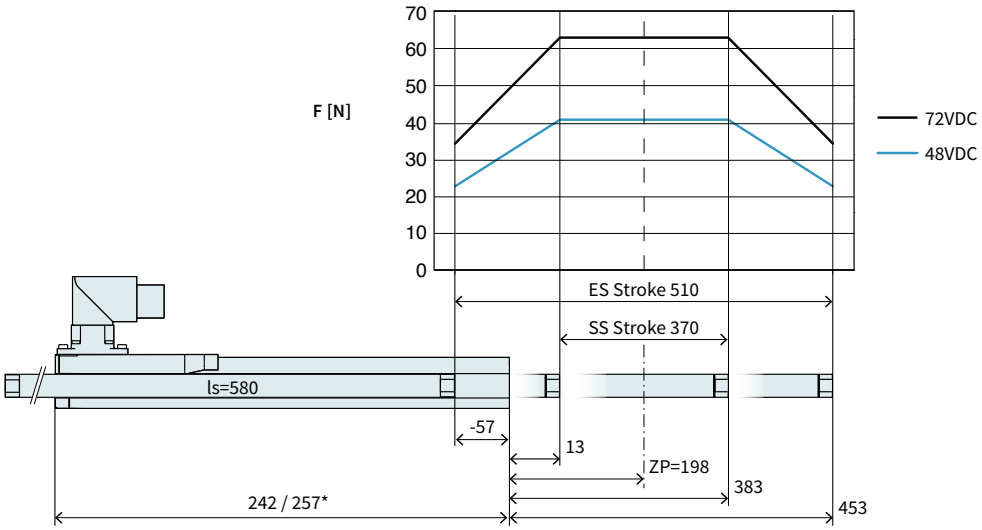

Dimensions in mm
*Cable Type

Technical Data P01-23x160/370x510-LC				
Stroke				
Standard Stroke (SS)	mm	(in)	370	(14.59)
Extended Stroke (ES)	mm	(in)	510	(20.1)
Force				
Max. Force @ 48VDC	N	(lbf)	41.6	(9.35)
Max. Force @ 72VDC	N	(lbf)	62.4	(14)
Max. Cont. Force [Passive cooling/ Fan / Fluid]	N	(lbf)	16 / 30 / -	(3.6 / 6.8 / -)
Max. Border Force relative	%		56	
Force Constant	N/A_{pk}	(lbf/A_{pk})	22	(4.95)
Velocity				
Max. Velocity @ 48VDC	m/s	(in/s)	1.9	(78.9)
Max. Velocity @ 72VDC	m/s	(in/s)	2.9	(119.9)
Position Detection				
Repeatability	mm	(in)	±0.05	(±0.002)
Linearity	%		± 0.15	
Electrical Data				
Max. Current @ 48VDC	A_{pk}		1.8	
Max. Current @ 72VDC	A_{pk}		2.8	
Max. Cont. Current [Passive cooling /Fan / Fluid]	A_{pk}		0.73 / 1.4 / -	
Thermal Data				
Max. Winding Temperature (Sensor)	°C		90	
Thermal Resistance [Passive cooling / Fan / Fluid]	°K/W		3.6 / 1 / -	
Thermal Time Constant [Passive cooling / Fan / Fluid]	s		720 / 200 / -	
Mechanical Data				
Slider Length	mm	(in)	580	(23)
Slider Mass	g	(lb)	480	(1.06)

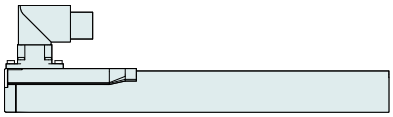

Item	Description	Item-No.
PS01-23x160-R	Stator with IP67 Connector M17/9(m)	0150-1234

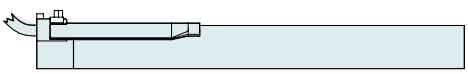

PS01-23x160-R20	Stator, 0.2 m cable, IP67 con. M17/9(m)	0150-1242
PS01-23x160	Stator, cable 1m, Connector D-Sub-9(m)	0150-1202



PL01-12x580/540-LC	Slider 'standard LC'	0150-2587
PL02-12x580/540-LC	Slider 'heavy duty LC'	0150-2596

P01-23x160/550x690-LC

Max. Stroke: 690 mm
Peak Force: 62 N

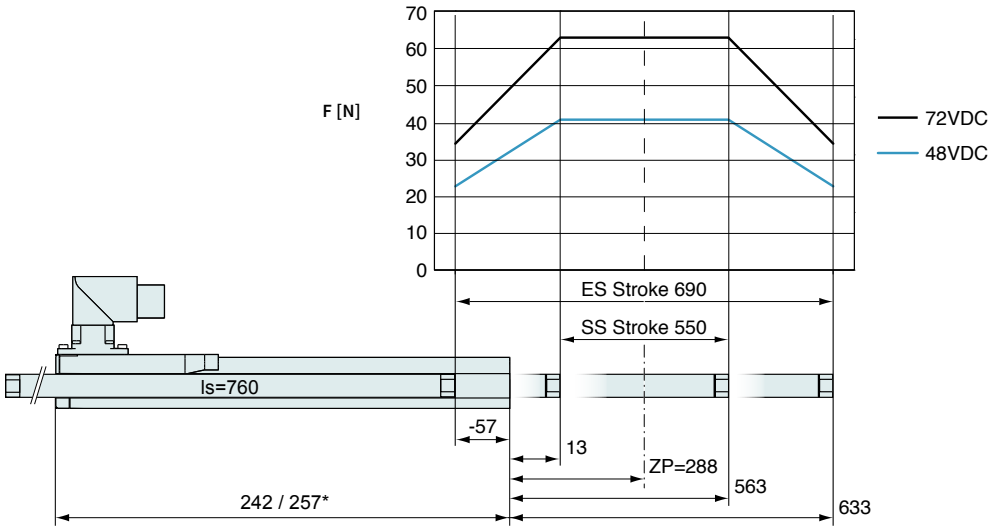

Dimensions in mm
*Cable Type

Technical Data P01-23x160/550x690-LC				
Stroke				
Standard Stroke (SS)	mm	(in)	550	(21.69)
Extended Stroke (ES)	mm	(in)	690	(27.19)
Force				
Max. Force @ 48VDC	N	(lbf)	41.6	(9.35)
Max. Force @ 72VDC	N	(lbf)	62.4	(14)
Max. Cont. Force [Passive cooling/ Fan / Fluid]	N	(lbf)	16 / 30 / -	(3.6 / 6.8 / -)
Max. Border Force relative	%		56	
Force Constant	N/A_{pk}	(lbf/A_{pk})	22	(4.95)
Velocity				
Max. Velocity @ 48VDC	m/s	(in/s)	1.9	(78.9)
Max. Velocity @ 72VDC	m/s	(in/s)	2.9	(119.9)
Position Detection				
Repeatability	mm	(in)	±0.05	(±0.002)
Linearity	%		± 0.15	
Electrical Data				
Max. Current @ 48VDC	A_{pk}		1.8	
Max. Current @ 72VDC	A_{pk}		2.8	
Max. Cont. Current [Passive cooling /Fan / Fluid]	A_{pk}		0.73 / 1.4 / -	
Thermal Data				
Max. Winding Temperature (Sensor)	°C		90	
Thermal Resistance [Passive cooling / Fan / Fluid]	°K/W		3.6 / 1 / -	
Thermal Time Constant [Passive cooling / Fan / Fluid]	s		720 / 200 / -	
Mechanical Data				
Slider Length	mm	(in)	760	(30)
Slider Mass	g	(lb)	630	(1.39)

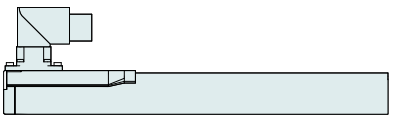





Item	Description	Item-No.
PS01-23x160-R	Stator with IP67 Connector M17/9(m)	0150-1234
PS01-23x160-R20	Stator, 0.2 m cable, IP67 con. M17/9(m)	0150-1242
PS01-23x160	Stator, cable 1m, Connector D-Sub-9(m)	0150-1202
PL01-12x760/720-LC	Slider 'standard LC'	0150-2589
PL01-12x760/720-LC	Slider 'heavy duty LC'	on request

P01-23x160/640x780-LC

Max. Stroke: 780 mm
Peak Force: 62 N

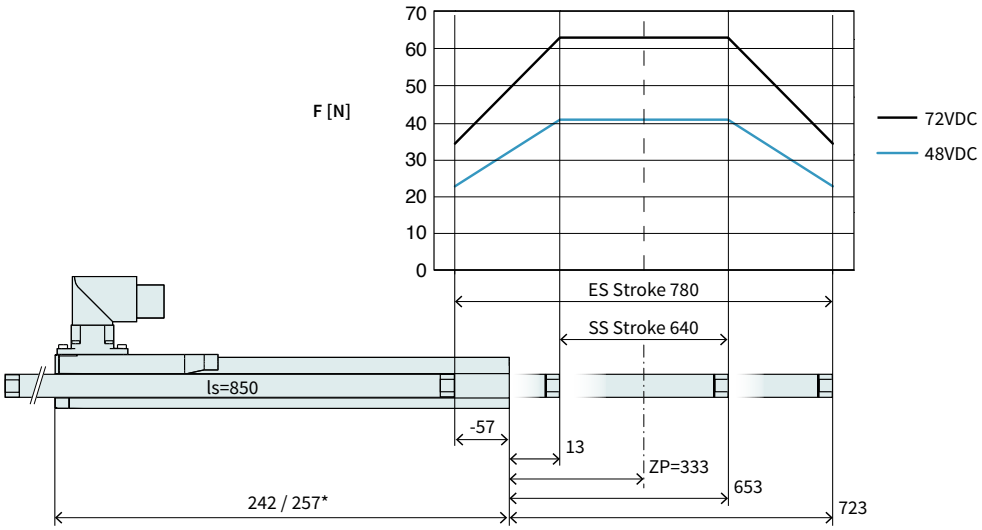

Dimensions in mm
*Cable Type

Technical Data P01-23x160/640x780-LC				
Stroke				
Standard Stroke (SS)	mm	(in)	640	(25.19)
Extended Stroke (ES)	mm	(in)	780	(30.69)
Force				
Max. Force @ 48VDC	N	(lbf)	41.6	(9.35)
Max. Force @ 72VDC	N	(lbf)	62.4	(14)
Max. Cont. Force [Passive cooling/ Fan / Fluid]	N	(lbf)	16 / 30 / -	(3.6 / 6.8 / -)
Max. Border Force relative	%		56	
Force Constant	N/A_{pk}	(lbf/A_{pk})	22	(4.95)
Velocity				
Max. Velocity @ 48VDC	m/s	(in/s)	1.9	(78.9)
Max. Velocity @ 72VDC	m/s	(in/s)	2.9	(119.9)
Position Detection				
Repeatability	mm	(in)	±0.05	(±0.002)
Linearity	%		± 0.15	
Electrical Data				
Max. Current @ 48VDC	A_{pk}		1.8	
Max. Current @ 72VDC	A_{pk}		2.8	
Max. Cont. Current [Passive cooling /Fan / Fluid]	A_{pk}		0.73 / 1.4 / -	
Thermal Data				
Max. Winding Temperature (Sensor)	°C		90	
Thermal Resistance [Passive cooling / Fan / Fluid]	°K/W		3.6 / 1 / -	
Thermal Time Constant [Passive cooling / Fan / Fluid]	s		720 / 200 / -	
Mechanical Data				
Slider Length	mm	(in)	850	(33)
Slider Mass	g	(lb)	700	(1.54)

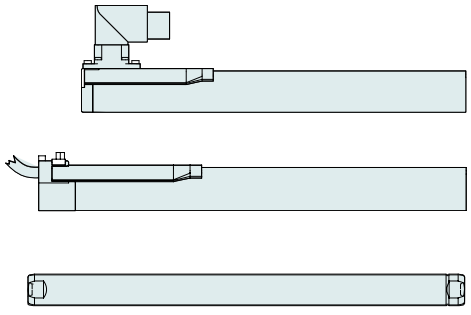

Item	Description	Item-No.
PS01-23x160-R	Stator with IP67 Connector M17/9(m)	0150-1234
PS01-23x160-R20	Stator, 0.2 m cable, IP67 con. M17/9(m)	0150-1242
PS01-23x160	Stator, cable 1m, Connector D-Sub-9(m)	0150-1202
PL01-12x850/810-LC	Slider 'standard LC'	0150-2588
PL02-12x850/810-LC	Slider 'heavy duty LC'	on request

Linear Guides H01



HM01-23x160/80	Linear Module 23x160 with 80 mm Stroke		
H-Guide	H01-23x166/80	H-Guide for P01-23x160, Stroke max 80mm	0150-5017
	H01-23x166/80-GF	H-Guide for P01-23x160, Stroke max 80mm	0150-5077
Stator	PS01-23x160-R	Stator with IP67 connector M17/9(m)	0150-1234
	PS01-23x160-R20	Stator, 0.2m cable, IP67 con. M17/9(m)	0150-1242
	PS01-23x160	Stator, cable 1m, connector D-Sub-9(m)	0150-1202
Slider	PL01-12x290/250-LC	Slider 'standard LC'	0150-2583

HM01-23x160/180	Linear Module 23x160 with 180 mm Stroke		
H-Guide	H01-23x166/180	H-Guide for P01-23x160, Stroke max 180mm	0150-5018
	H01-23x166/180-GF	H-Guide for P01-23x160, Stroke max 180mm	0150-5078
Stator	PS01-23x160-R	Linearmotor Stator, Connector R - IP67	0150-1234
	PS01-23x160-R20	Linearmotor Stator, 0.2m Cable, Connector R - IP67	0150-1242
	PS01-23x160	Linearmotor Stator, 1.0m Cable, Connector D	0150-1202
Slider	PL01-12x420/380-LC	Slider 'standard LC'	0150-2585

HM01-23x160/280	Linear Module 23x160 with 280 mm Stroke		
H-Guide	H01-23x166/280	H-Guide for P01-23x160, Stroke max 280 mm	0150-5019
	H01-23x166/280-GF	H-Guide for P01-23x160, Stroke max 280 mm	0150-5079
Stator	PS01-23x160-R	Linearmotor Stator, Connector R - IP67	0150-1234
	PS01-23x160-R20	Linearmotor Stator, 0.2m Cable, Connector R - IP67	0150-1242
	PS01-23x160	Linearmotor Stator, 1.0m Cable, Connector D	0150-1202
Slider	PL01-12x480/440-LC	Slider 'standard LC'	0150-2586

Accessories			
Fan	HV01-23	Fan cooling for H01-23	0150-5050
MagSpring	MF01-20/H23	Flange MagSpring 20 / H-Guide 23	0250-2306
	MA01-20/H23	Flange MagSpring 20 / H-Guide 23	0250-0116
Centering sleeve	HC01-09/04	Centering sleeve D9x4mm	0150-3251

FIND MORE PRODUCT DETAILS IN THE CHAPTER "LINEAR GUIDES".

Motor Cable

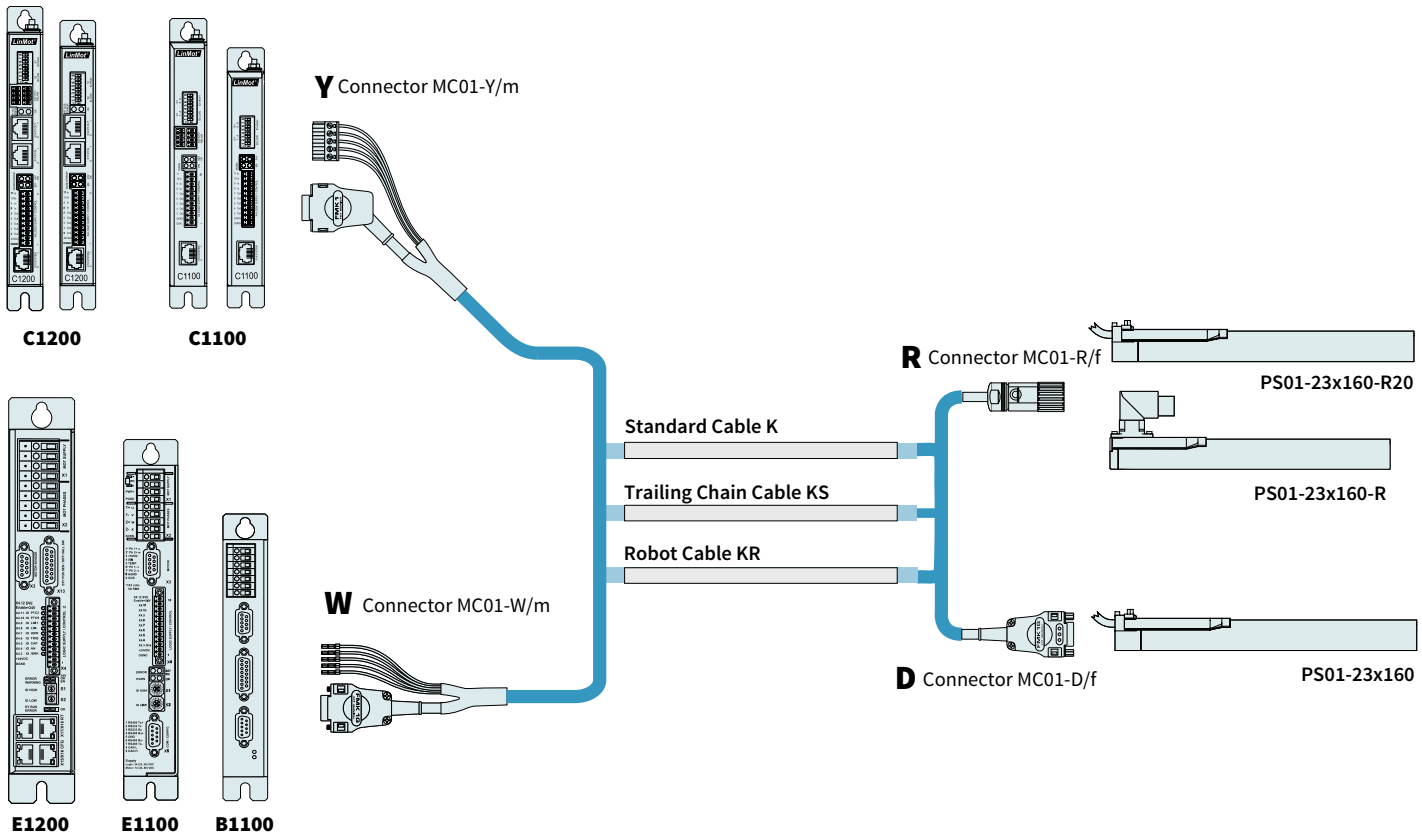

ORDERING INFORMATION

STANDARD CABLE		
Item	**Description**	**Item-No.**
K05-W/R-2	Motor Cable W/R, 2 m	0150-2119
K05-W/R-4	Motor Cable W/R, 4 m	0150-2120
K05-W/R-6	Motor Cable W/R, 6 m	0150-2121
K05-W/R-8	Motor Cable W/R, 8 m	0150-2122
K05-W/R-	Motor Cable W/R, Custom length	0150-3262
K05-W/D-0.4	Motor Cable W/D, 0.4 m	0150-1947
K05-Y/R-2	Motor Cable Y/R, 2 m	0150-2421
K05-Y/R-4	Motor Cable Y/R, 4 m	0150-2422
K05-Y/R-6	Motor Cable Y/R, 6 m	0150-2423
K05-Y/R-8	Motor Cable Y/R, 8 m	0150-2424
K05-Y-Fe/R-	Motor Cable Y/R, Custom length	0150-3501
K05-Y-Fe/D-	Motor Cable Y-Fe/D, Custom length	0150-1947

TRAILING CHAIN CABLE		
Item	**Description**	**Item-No.**
KS05-W/R-4	Trailing Chain Cable W/R, 4 m	0150-2106
KS05-W/R-6	Trailing Chain Cable W/R, 6 m	0150-2131
KS05-W/R-8	Trailing Chain Cable W/R, 8 m	0150-2107
KS05-W/R-	Trailing Chain Cable W/R, Custom length	0150-3256
KS05-Y/R-4	Trailing Chain Cable Y/R, 4 m	0150-2433
KS05-Y/R-6	Trailing Chain Cable Y/R, 6 m	0150-2434
KS05-Y/R-8	Trailing Chain Cable Y/R, 8 m	0150-2435
KS05-Y/R-	Trailing Chain Cable Y/R, Custom length	0150-3507
KS05-Y-Fe/D-	Trailing Chain Cable Y-Fe/D, Custom length	0150-3556

ROBOT CABLE		
Item	**Description**	**Item-No.**
KR05-W/R-	Robot Cable KR05-W/R, Custom length	0150-3336
KR05-Y-Fe/R-	Robot Cable KR05-Y-Fe/R, Custom length	0150-3512

CONNECTOR & CABLE (INDIVIDUAL)		
Item	**Description**	**Item-No.**
MC01-W/m	Motor Connector W/m	0150-3140
MC01-Y-Fe/m	Motor Connector Y-Fe/m	0150-3289
MC01-R/f	Motor Connector R/f	0150-3129
MC01-D/f	Motor Connector D/f	0150-3025
K05-04/05	Motor Cable per m	0150-1920
KS05-04/05	Trailing Chain Cable per m	0150-1938
KR05-04/05	Robot Cable per m	0150-1846

MOTOR FLANGES



Item	Description	Item-No.
PF02-23x120	Flange 23x120 mm	0150-2103
PF02-23x170	Flange 23x170 mm	0150-2117

FIND MORE PRODUCT DETAILS IN THE CHAPTER "ACCESSORIES".

FANS



Item	Description	Item-No.
HV01-23	Fan cooling for H01-23 and PF02-23	0150-5050

FIND MORE PRODUCT DETAILS IN THE CHAPTER "ACCESSORIES".

SLIDER MOUNTING



Item	Description	Item-No.
PLF01-12	Fixed Bearing Set for 12 mm sliders	0150-3085
PLF01-12-Ni	Fixed Bearing Set for 12 mm sliders nickel-plated	0150-3573
PLL02-12	Floating Bearing for PL01-12 Sliders	0150-3111

FIND MORE PRODUCT DETAILS IN THE CHAPTER "ACCESSORIES".

WIPERS



Item	Description	Item-No.
PA01-23/12-F	Wiper front side for PS01-23x...	0150-3125

FIND MORE PRODUCT DETAILS IN THE CHAPTER "ACCESSORIES".

EXTERNAL POSITION SENSORS



Item	Description	Item-No.
MS01-1/D	Linear Encoder 1µm, A/B (for incremental strip)	0150-1840
MB01-1000	Magnetic incremental strip for MS01-1/D, per cm	0150-1963
KS025-D/D-Encoder	Encoder Cable (Length in m)	0150-3166
KS025-D/D15-Encoder	Encoder Cable (Length in m)	0150-3168

FIND MORE PRODUCT DETAILS IN THE CHAPTER "ACCESSORIES".



Item	Description	Item-No.
MS01-1/D-SSI	Linear Encoder 1µm, A/B (for absolute strip)	0150-2095
MB01-1000-ABS	Magnetic absolute strip for MS01-1/D-SSI (per cm)	0150-2096
EC01-ABS/ENC-12-S	MS01-1/D-SSI Encoder connector straight	0150-3616
KSS01-12-D15/ABS-ENC	Special cable for MS01-1/D-SSI on C1100/C1200/C1400/E1200/E1400 Drives	0150-3652

FIND MORE PRODUCT DETAILS IN THE CHAPTER "ACCESSORIES".

LINEAR MOTORS P01-23x160F



- Highly dynamic drives
- With a special F-winding for a higher maximum speed
- Wide stroke range
- Available with cable outlet or with rotatable connector
- Optional with air cooling
- Wide range of applications in handling modules as well as in plant and machine construction

LINEAR MOTORS P01-23x160F

Technical Data 135

Motor Specifications

P01-23x160F/40x100-LC 138

P01-23x160F/20x120-LC 139

P01-23x160F/20x160-LC 140

P01-23x160F/80x220-LC 141

P01-23x160F/140x280-LC 142

P01-23x160F/210x350-LC 143

P01-23x160F/270x410-LC 144

P01-23x160F/370x510-LC 145

P01-23x160F/550x690-LC 146

P01-23x160F/640x780-LC 147

Linear Guides 148

Accessories 149



MOTOR FAMILY P01-23x160F

Technical Data				
Stroke				
Standard Stroke (SS)	mm	(in)	≤ 640	(≤ 25.19)
Extended Stroke (ES)	mm	(in)	≤ 780	(≤ 30.69)
Force				
Max. Force @ 48VDC	N	(lbf)	62.5	(14.1)
Max. Force @ 72VDC	N	(lbf)	86.4	(19.4)
Max. Cont. Force [Passive cooling/ Fan / Fluid]	N	(lbf)	16 / 30 / -	(3.6 / 6.9 / -)
Max. Border Force relative	%		≤ 75	
Force Constant	N/A_{pk}	(lbf/A_{pk})	14.4	(3.24)
Velocity				
Max. Velocity @ 48VDC	m/s	(in/s)	4	(159.9)
Max. Velocity @ 72VDC	m/s	(in/s)	6	(239.9)
Position Detection				
Position Resolution	mm	(in)	0.002	(0.0001)
Repeatability	mm	(in)	±0.05	(±0.002)
Position Resolution with ES	mm	(in)	0.001	(0.00004)
Repeatability with ES	mm	(in)	±0.01	(±0.0004)
Linearity with ES	mm	(in)	±0.01	(±0.0004)
Electrical Data				
Max. Current @ 48VDC	A_{pk}		4.3	
Max. Current @ 72VDC	A_{pk}		5.9	
Max. Cont. Current [Passive cooling /Fan / Fluid]	A_{pk}		1.1 / 2.1 / -	
Terminal Resistance 25 °C / 120 °C	Ohm		9 / 12	
Terminal Inductivity	mH		1.2	
Magnetic Period	mm	(in)	20	(0.78)
Thermal Data				
Max. Winding Temperature (Sensor)	°C		90	
Thermal Resistance [Passive cooling / Fan / Fluid]	°K/W		3.5 / 1 / -	
Thermal Time Constant [Passive cooling / Fan / Fluid]	s		700 / 200 / -	
Mechanical Data				
Stator Diameter	mm	(in)	23	(0.91)
Stator Length [Connector type / Cable type]	mm	(in)	242 / 257	(9.5 / 10)
Stator Mass	g	(lb)	450	(1.0)
Slider Diameter	mm	(in)	12	(0.47)
Slider Length	mm	(in)	170 - 850	(6.7 - 33)
Slider Mass	g	(lb)	130 - 700	(0.29 - 1.54)
IP Code			IP 65	

STATOR CONNECTOR TYPE

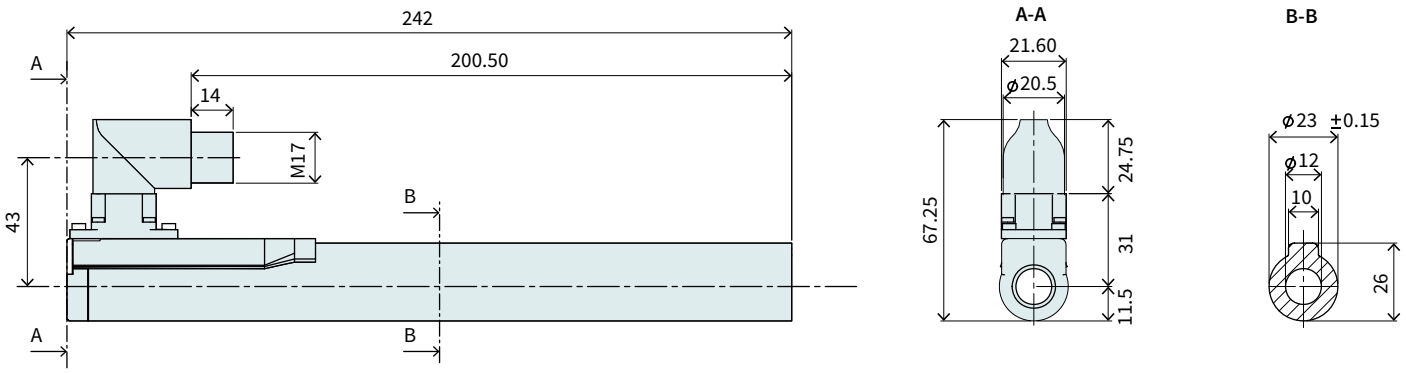

Item	Description	Item-No.
PS01-23x160F-R	Stator with IP67 Connector M17/9(m)	0150-1235

STATOR CABLE TYPE

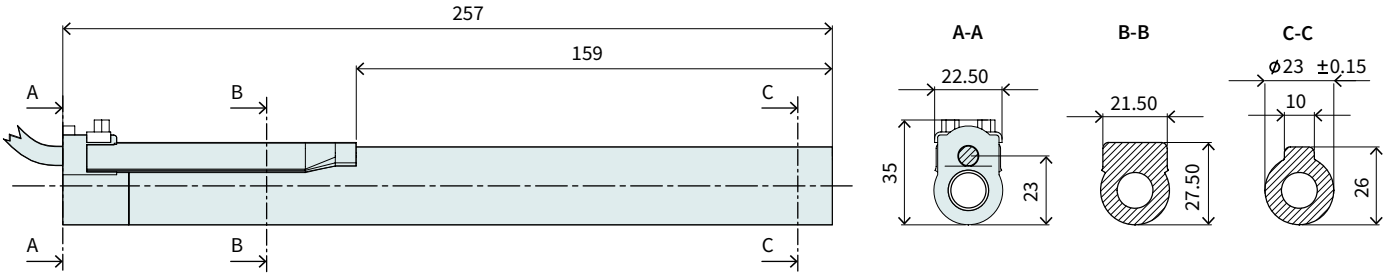

Item	Description	Item-No.
PS01-23x160F-R20	Stator, 0.2 m cable, IP67 con. M17/9(m)	0150-1243

CONNECTOR

Motor Connector Wiring	PS01-23x160F-R PS01-23x160F-R20	Wire color motor cable
	R-Connector	
Ph 1+	1	red
Ph 1-	2	pink
Ph 2+	3	blue
Ph 2-	4	grey
+5VDC	A	white
GND	B	inner shield
Sin	C	yellow
Cos	D	green
Temp.	E	black
Shield	Housing	outer Shield

R-Connector

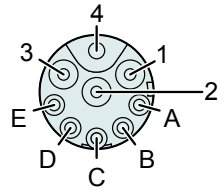

View: Motor Connector, plug side

SLIDER

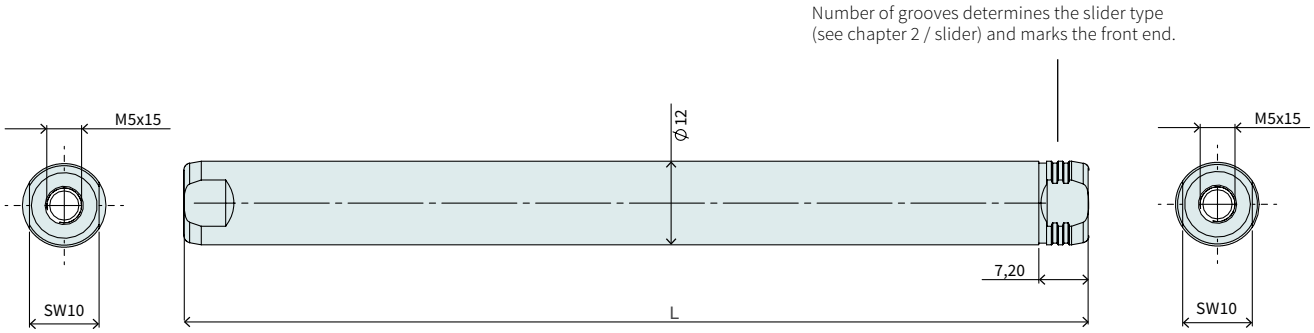

Slider Standard				
Item	Description	Max. Stroke [mm]	Standard Stroke [mm]	Item-No.
PL01-12x170/130-LC	Slider 'standard LC'	100	40	0150-2581
PL01-12x190/150-LC	Slider 'standard LC'	120	20	0150-2582
PL01-12x230/190-LC	Slider 'standard LC'	160	20	0150-2598
PL01-12x290/250-LC	Slider 'standard LC'	220	80	0150-2583
PL01-12x350/310-LC	Slider 'standard LC'	280	140	0150-2584
PL01-12x420/380-LC	Slider 'standard LC'	350	210	0150-2585
PL01-12x480/440-LC	Slider 'standard LC'	410	270	0150-2586
PL01-12x580/540-LC	Slider 'standard LC'	510	370	0150-2587
PL01-12x760/720-LC	Slider 'standard LC'	690	550	0150-2589
PL01-12x850/810-LC	Slider 'standard LC'	780	640	0150-2588

Slider Heavy Duty				
Item	Description	Max. Stroke [mm]	Standard Stroke [mm]	Item-No.
PL02-12x170/130-LC	Slider 'heavy duty LC'	100	40	0150-2591
PL02-12x190/150-LC	Slider 'heavy duty LC'	120	20	0150-2592
PL02-12x230/190-LC	Slider 'heavy duty LC'	160	20	0150-2599
PL02-12x290/250-LC	Slider 'heavy duty LC'	220	80	0150-2593
PL02-12x350/310-LC	Slider 'heavy duty LC'	280	140	0150-2594
PL02-12x420/380-LC	Slider 'heavy duty LC'	350	210	0150-2595
PL02-12x480/440-LC	Slider 'heavy duty LC'	410	270	0150-2597
PL02-12x580/540-LC	Slider 'heavy duty LC'	510	370	0150-2596
PL02-12x760/720-LC	Slider 'heavy duty LC'	690	550	on request
PL02-12x850/810-LC	Slider 'heavy duty LC'	780	640	on request

P01-23x160F/40x100-LC

Max. Stroke: 100 mm
Peak Force: 65 N

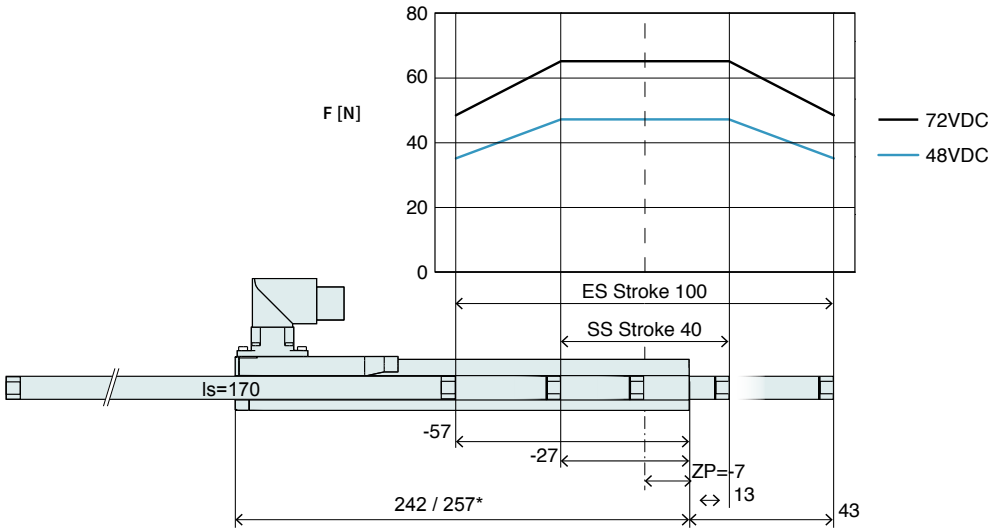

Dimensions in mm
*Cable Type

Technical Data P01-23x160F/40x100-LC				
Stroke				
Standard Stroke (SS)	mm	(in)	40	(1.57)
Extended Stroke (ES)	mm	(in)	100	(3.93)
Force				
Max. Force @ 48VDC	N	(lbf)	46.9	(10.5)
Max. Force @ 72VDC	N	(lbf)	64.8	(14.6)
Max. Cont. Force [Passive cooling/ Fan / Fluid]	N	(lbf)	12 / 23 / -	(2.7 / 5.1 / -)
Max. Border Force relative	%		75	
Force Constant	N/A_{pk}	(lbf/A_{pk})	10.8	(2.43)
Velocity				
Max. Velocity @ 48VDC	m/s	(in/s)	4	(159.9)
Max. Velocity @ 72VDC	m/s	(in/s)	6	(239.9)
Position Detection				
Repeatability	mm	(in)	±0.05	(±0.002)
Linearity	%		± 0.35	
Electrical Data				
Max. Current @ 48VDC	A_{pk}		4.3	
Max. Current @ 72VDC	A_{pk}		5.9	
Max. Cont. Current [Passive cooling /Fan / Fluid]	A_{pk}		1.1 / 2.1 / -	
Thermal Data				
Max. Winding Temperature (Sensor)	°C		90	
Thermal Resistance [Passive cooling / Fan / Fluid]	°K/W		3.5 / 1 / -	
Thermal Time Constant [Passive cooling / Fan / Fluid]	s		700 / 200 / -	
Mechanical Data				
Slider Length	mm	(in)	170	(6.7)
Slider Mass	g	(lb)	130	(0.29)

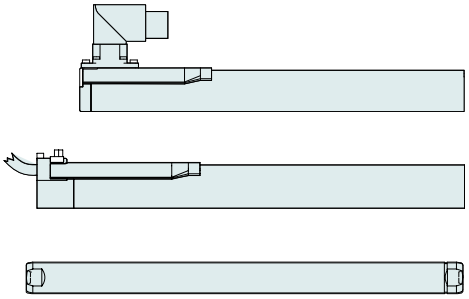

Item	Description	Item-No.
PS01-23x160F-R	Stator with IP67 Connector M17/9(m)	0150-1235
PS01-23x160F-R20	Stator, 0.2 m cable, IP67 con. M17/9(m)	0150-1243
PL01-12x170/130-LC	Slider 'standard LC'	0150-2581
PL02-12x170/130-LC	Slider 'heavy duty LC'	0150-2591

P01-23x160F/20x120-LC

Max. Stroke: 120 mm
Peak Force: 76 N

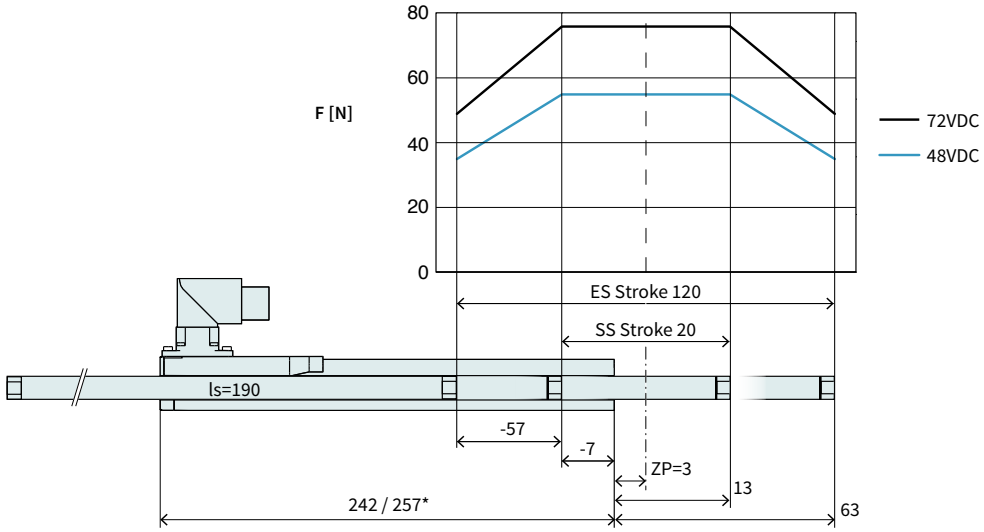

Dimensions in mm
*Cable Type

Technical Data P01-23x160F/20x120-LC				
Stroke				
Standard Stroke (SS)	mm	(in)	20	(0.78)
Extended Stroke (ES)	mm	(in)	120	(4.71)
Force				
Max. Force @ 48VDC	N	(lbf)	54.7	(12.3)
Max. Force @ 72VDC	N	(lbf)	75.6	(17)
Max. Cont. Force [Passive cooling/ Fan / Fluid]	N	(lbf)	14 / 27 / -	(3.2 / 6 / -)
Max. Border Force relative	%		64	
Force Constant	N/A_{pk}	(lbf/A_{pk})	12.6	(2.83)
Velocity				
Max. Velocity @ 48VDC	m/s	(in/s)	3.4	(139.9)
Max. Velocity @ 72VDC	m/s	(in/s)	5.2	(209.9)
Position Detection				
Repeatability	mm	(in)	±0.05	(±0.002)
Linearity	%		± 0.3	
Electrical Data				
Max. Current @ 48VDC	A_{pk}		4.3	
Max. Current @ 72VDC	A_{pk}		5.9	
Max. Cont. Current [Passive cooling /Fan / Fluid]	A_{pk}		1.1 / 2.1 / -	
Thermal Data				
Max. Winding Temperature (Sensor)	°C		90	
Thermal Resistance [Passive cooling / Fan / Fluid]	°K/W		3.5 / 1 / -	
Thermal Time Constant [Passive cooling / Fan / Fluid]	s		700 / 200 / -	
Mechanical Data				
Slider Length	mm	(in)	190	(7.5)
Slider Mass	g	(lb)	145	(0.32)

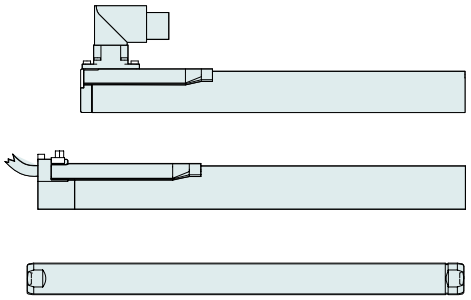

Item	Description	Item-No.
PS01-23x160F-R	Stator with IP67 Connector M17/9(m)	0150-1235
PS01-23x160F-R20	Stator, 0.2 m cable, IP67 con. M17/9(m)	0150-1243
PL01-12x190/150-LC	Slider 'standard LC'	0150-2582
PL02-12x190/150-LC	Slider 'heavy duty LC'	0150-2592

P01-23x160F/20x160-LC

Max. Stroke: 160 mm
Peak Force: 86 N

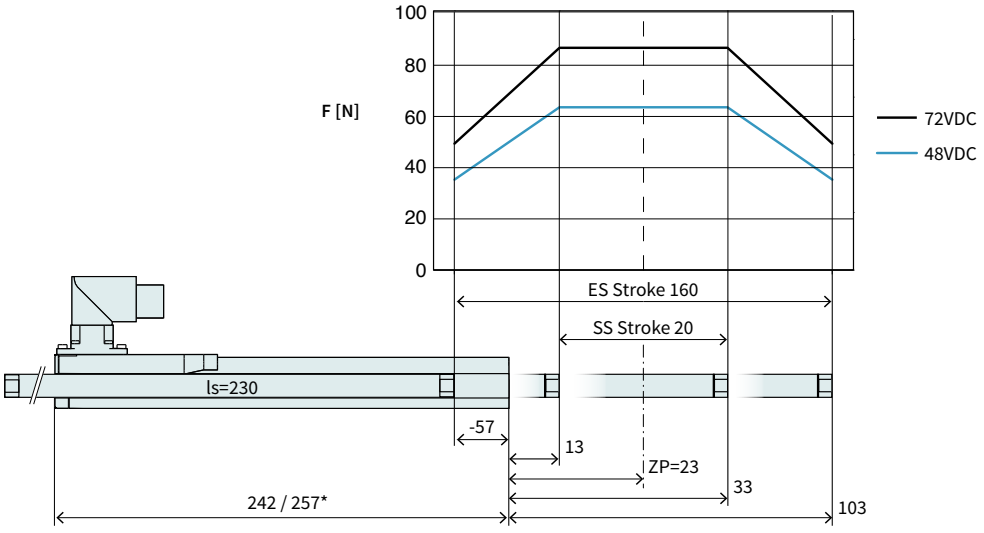

Dimensions in mm
*Cable Type

Technical Data P01-23x160F/20x160-LC				
Stroke				
Standard Stroke (SS)	mm	(in)	20	(0.78)
Extended Stroke (ES)	mm	(in)	160	(6.29)
Force				
Max. Force @ 48VDC	N	(lbf)	62.5	(14.1)
Max. Force @ 72VDC	N	(lbf)	86.4	(19.4)
Max. Cont. Force [Passive cooling/ Fan / Fluid]	N	(lbf)	16 / 30 / -	(3.6 / 6.9 / -)
Max. Border Force relative	%		56	
Force Constant	N/A_{pk}	(lbf/A_{pk})	14.4	(3.24)
Velocity				
Max. Velocity @ 48VDC	m/s	(in/s)	3	(119.9)
Max. Velocity @ 72VDC	m/s	(in/s)	4.5	(179.9)
Position Detection				
Repeatability	mm	(in)	±0.05	(±0.002)
Linearity	%		± 0.25	
Electrical Data				
Max. Current @ 48VDC	A_{pk}		4.3	
Max. Current @ 72VDC	A_{pk}		5.9	
Max. Cont. Current [Passive cooling /Fan / Fluid]	A_{pk}		1.1 / 2.1 / -	
Thermal Data				
Max. Winding Temperature (Sensor)	°C		90	
Thermal Resistance [Passive cooling / Fan / Fluid]	°K/W		3.5 / 1 / -	
Thermal Time Constant [Passive cooling / Fan / Fluid]	s		700 / 200 / -	
Mechanical Data				
Slider Length	mm	(in)	230	(9.1)
Slider Mass	g	(lb)	180	(0.4)

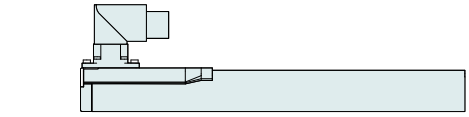





Item	Description	Item-No.
PS01-23x160F-R	Stator with IP67 Connector M17/9(m)	0150-1235
PS01-23x160F-R20	Stator, 0.2 m cable, IP67 con. M17/9(m)	0150-1243
PL01-12x230/190-LC	Slider 'standard LC'	0150-2598
PL02-12x230/190-LC	Slider 'heavy duty LC'	0150-2599

P01-23x160F/80x220-LC

Max. Stroke: 220 mm
Peak Force: 86 N

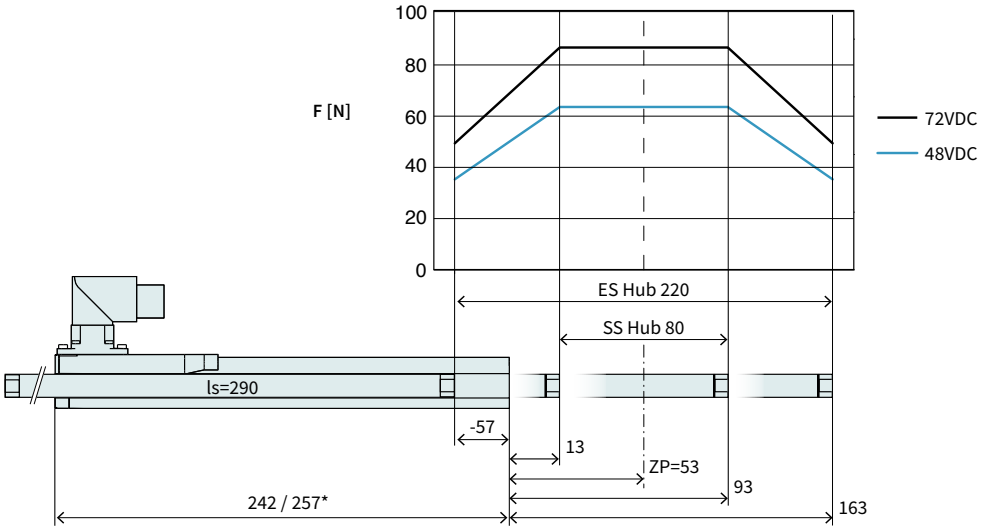

Dimensions in mm
*Cable Type

Technical Data P01-23x160F/80x220-LC				
Stroke				
Standard Stroke (SS)	mm	(in)	80	(3.14)
Extended Stroke (ES)	mm	(in)	220	(8.65)
Force				
Max. Force @ 48VDC	N	(lbf)	62.5	(14.1)
Max. Force @ 72VDC	N	(lbf)	86.4	(19.4)
Max. Cont. Force [Passive cooling/ Fan / Fluid]	N	(lbf)	16 / 30 / -	(3.6 / 6.9 / -)
Max. Border Force relative	%		56	
Force Constant	N/A_{pk}	(lbf/A_{pk})	14.4	(3.24)
Velocity				
Max. Velocity @ 48VDC	m/s	(in/s)	3	(119.9)
Max. Velocity @ 72VDC	m/s	(in/s)	4.5	(179.9)
Position Detection				
Repeatability	mm	(in)	±0.05	(±0.002)
Linearity	%		± 0.2	
Electrical Data				
Max. Current @ 48VDC	A_{pk}		4.3	
Max. Current @ 72VDC	A_{pk}		5.9	
Max. Cont. Current [Passive cooling /Fan / Fluid]	A_{pk}		1.1 / 2.1 / -	
Thermal Data				
Max. Winding Temperature (Sensor)	°C		90	
Thermal Resistance [Passive cooling / Fan / Fluid]	°K/W		3.5 / 1 / -	
Thermal Time Constant [Passive cooling / Fan / Fluid]	s		700 / 200 / -	
Mechanical Data				
Slider Length	mm	(in)	290	(11)
Slider Mass	g	(lb)	230	(0.51)

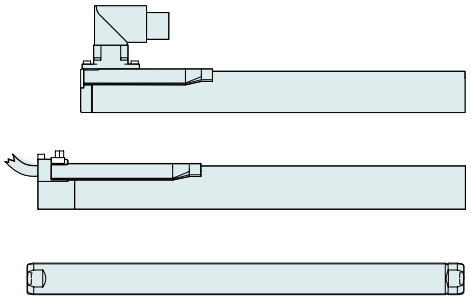

Item	Description	Item-No.
PS01-23x160F-R	Stator with IP67 Connector M17/9(m)	0150-1235
PS01-23x160F-R20	Stator, 0.2 m cable, IP67 con. M17/9(m)	0150-1243
PL01-12x290/250-LC	Slider 'standard LC'	0150-2583
PL02-12x290/250-LC	Slider 'heavy duty LC'	0150-2593

P01-23x160F/140x280-LC

Max. Stroke: 280 mm
Peak Force: 86 N

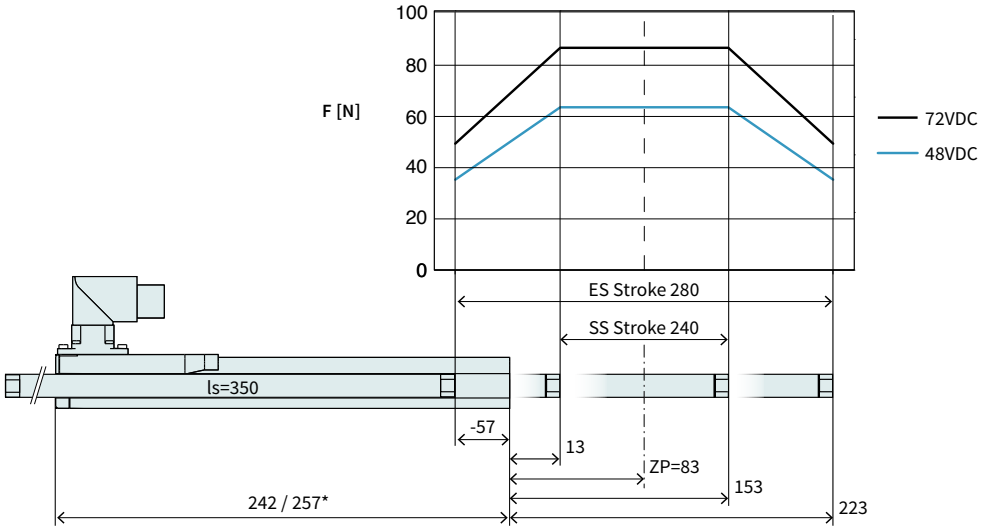

Dimensions in mm
*Cable Type

Technical Data P01-23x160F/140x280-LC				
Stroke				
Standard Stroke (SS)	mm	(in)	140	(5.5)
Extended Stroke (ES)	mm	(in)	280	(10.99)
Force				
Max. Force @ 48VDC	N	(lbf)	62.5	(14.1)
Max. Force @ 72VDC	N	(lbf)	86.4	(19.4)
Max. Cont. Force [Passive cooling/ Fan / Fluid]	N	(lbf)	16 / 30 / -	(3.6 / 6.9 / -)
Max. Border Force relative	%		56	
Force Constant	N/A_{pk}	(lbf/A_{pk})	14.4	(3.24)
Velocity				
Max. Velocity @ 48VDC	m/s	(in/s)	3	(119.9)
Max. Velocity @ 72VDC	m/s	(in/s)	4.5	(179.9)
Position Detection				
Repeatability	mm	(in)	±0.05	(±0.002)
Linearity	%		± 0.2	
Electrical Data				
Max. Current @ 48VDC	A_{pk}		4.3	
Max. Current @ 72VDC	A_{pk}		5.9	
Max. Cont. Current [Passive cooling /Fan / Fluid]	A_{pk}		1.1 / 2.1 / -	
Thermal Data				
Max. Winding Temperature (Sensor)	°C		90	
Thermal Resistance [Passive cooling / Fan / Fluid]	°K/W		3.5 / 1 / -	
Thermal Time Constant [Passive cooling / Fan / Fluid]	s		700 / 200 / -	
Mechanical Data				
Slider Length	mm	(in)	350	(14)
Slider Mass	g	(lb)	280	(0.62)

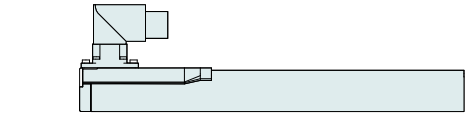





Item	Description	Item-No.
PS01-23x160F-R	Stator with IP67 Connector M17/9(m)	0150-1235
PS01-23x160F-R20	Stator, 0.2 m cable, IP67 con. M17/9(m)	0150-1243
PL01-12x350/310-LC	Slider 'standard LC'	0150-2584
PL02-12x350/310-LC	Slider 'heavy duty LC'	0150-2594

P01-23x160F/210x350-LC

Max. Stroke: 350 mm
Peak Force: 86 N

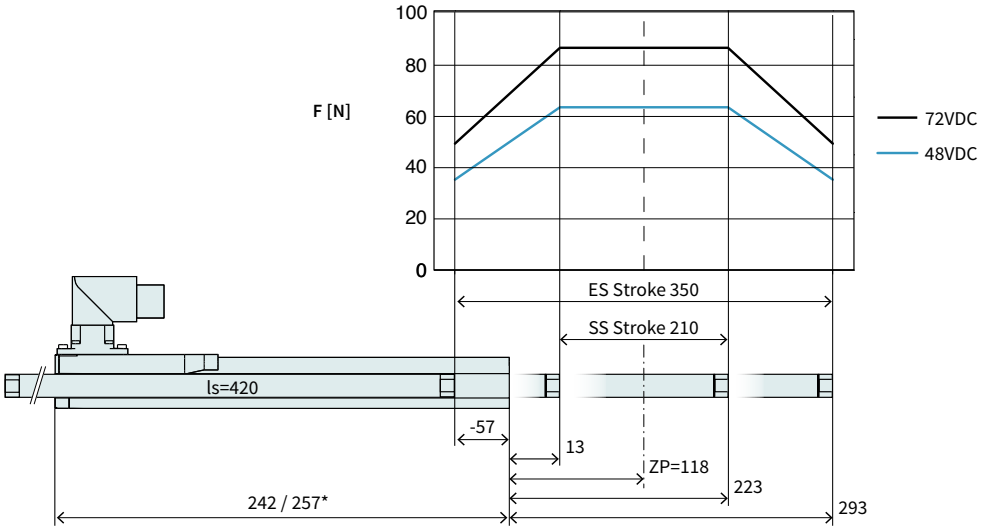

Dimensions in mm
*Cable Type

Technical Data P01-23x160F/210x350-LC				
Stroke				
Standard Stroke (SS)	mm	(in)	210	(8.26)
Extended Stroke (ES)	mm	(in)	350	(13.8)
Force				
Max. Force @ 48VDC	N	(lbf)	62.5	(14.1)
Max. Force @ 72VDC	N	(lbf)	86.4	(19.4)
Max. Cont. Force [Passive cooling/ Fan / Fluid]	N	(lbf)	16 / 30 / -	(3.6 / 6.9 / -)
Max. Border Force relative	%		56	
Force Constant	N/A_{pk}	(lbf/A_{pk})	14.4	(3.24)
Velocity				
Max. Velocity @ 48VDC	m/s	(in/s)	3	(119.9)
Max. Velocity @ 72VDC	m/s	(in/s)	4.5	(179.9)
Position Detection				
Repeatability	mm	(in)	±0.05	(±0.002)
Linearity	%		± 0.15	
Electrical Data				
Max. Current @ 48VDC	A_{pk}		4.3	
Max. Current @ 72VDC	A_{pk}		5.9	
Max. Cont. Current [Passive cooling /Fan / Fluid]	A_{pk}		1.1 / 2.1 / -	
Thermal Data				
Max. Winding Temperature (Sensor)	°C		90	
Thermal Resistance [Passive cooling / Fan / Fluid]	°K/W		3.5 / 1 / -	
Thermal Time Constant [Passive cooling / Fan / Fluid]	s		700 / 200 / -	
Mechanical Data				
Slider Length	mm	(in)	420	(17)
Slider Mass	g	(lb)	340	(0.75)

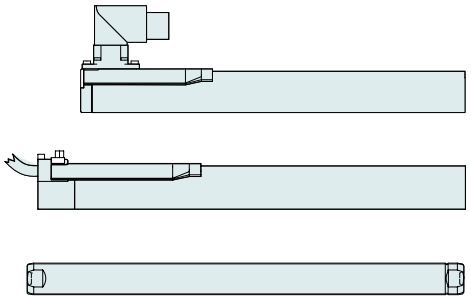

Item	Description	Item-No.
PS01-23x160F-R	Stator with IP67 Connector M17/9(m)	0150-1235
PS01-23x160F-R20	Stator, 0.2 m cable, IP67 con. M17/9(m)	0150-1243
PL01-12x420/380-LC	Slider 'standard LC'	0150-2585
PL02-12x420/380-LC	Slider 'heavy duty LC'	0150-2595

P01-23x160F/270x410-LC

Max. Stroke: 410 mm
Peak Force: 86 N

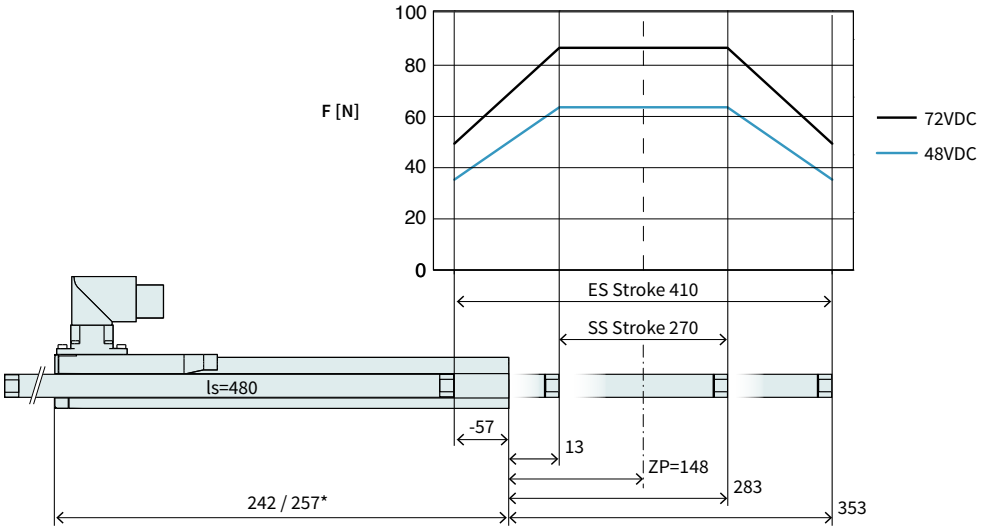

Dimensions in mm
*Cable Type

Technical Data P01-23x160F/270x410-LC				
Stroke				
Standard Stroke (SS)	mm	(in)	270	(10.59)
Extended Stroke (ES)	mm	(in)	410	(16.1)
Force				
Max. Force @ 48VDC	N	(lbf)	62.5	(14.1)
Max. Force @ 72VDC	N	(lbf)	86.4	(19.4)
Max. Cont. Force [Passive cooling/ Fan / Fluid]	N	(lbf)	16 / 30 / -	(3.6 / 6.9 / -)
Max. Border Force relative	%		56	
Force Constant	N/A_{pk}	(lbf/A_{pk})	14.4	(3.24)
Velocity				
Max. Velocity @ 48VDC	m/s	(in/s)	3	(119.9)
Max. Velocity @ 72VDC	m/s	(in/s)	4.5	(179.9)
Position Detection				
Repeatability	mm	(in)	±0.05	(±0.002)
Linearity	%		± 0.15	
Electrical Data				
Max. Current @ 48VDC	A_{pk}		4.3	
Max. Current @ 72VDC	A_{pk}		5.9	
Max. Cont. Current [Passive cooling /Fan / Fluid]	A_{pk}		1.1 / 2.1 / -	
Thermal Data				
Max. Winding Temperature (Sensor)	°C		90	
Thermal Resistance [Passive cooling / Fan / Fluid]	°K/W		3.5 / 1 / -	
Thermal Time Constant [Passive cooling / Fan / Fluid]	s		700 / 200 / -	
Mechanical Data				
Slider Length	mm	(in)	480	(19)
Slider Mass	g	(lb)	390	(0.78)

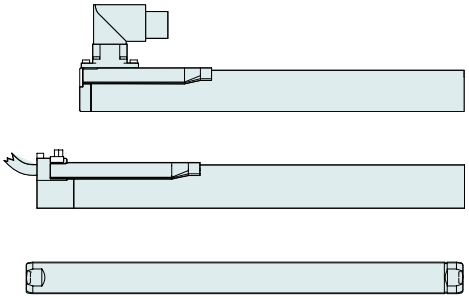

Item	Description	Item-No.
PS01-23x160F-R	Stator with IP67 Connector M17/9(m)	0150-1235
PS01-23x160F-R20	Stator, 0.2 m cable, IP67 con. M17/9(m)	0150-1243
PL01-12x480/440-LC	Slider 'standard LC'	0150-2586
PL02-12x480/440-LC	Slider 'heavy duty LC'	0150-2597

P01-23x160F/370x510-LC

Max. Stroke: 510 mm
Peak Force: 86 N

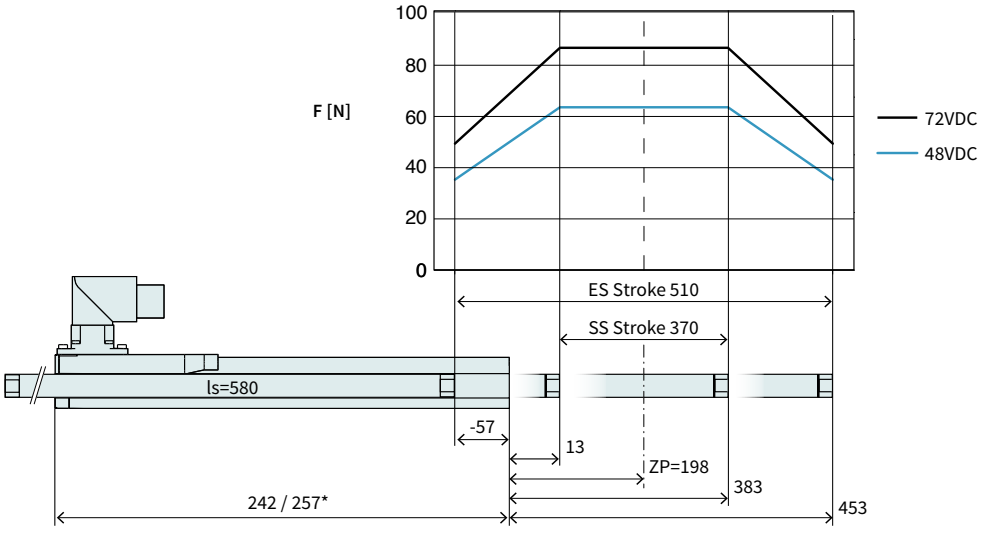

Dimensions in mm
*Cable Type

Technical Data P01-23x160F/370x510-LC				
Stroke				
Standard Stroke (SS)	mm	(in)	370	(14.59)
Extended Stroke (ES)	mm	(in)	510	(20.1)
Force				
Max. Force @ 48VDC	N	(lbf)	62.5	(14.1)
Max. Force @ 72VDC	N	(lbf)	86.4	(19.4)
Max. Cont. Force [Passive cooling/ Fan / Fluid]	N	(lbf)	16 / 30 / -	(3.6 / 6.9 / -)
Max. Border Force relative	%		56	
Force Constant	N/A_{pk}	(lbf/A_{pk})	14.4	(3.24)
Velocity				
Max. Velocity @ 48VDC	m/s	(in/s)	3	(119.9)
Max. Velocity @ 72VDC	m/s	(in/s)	4.5	(179.9)
Position Detection				
Repeatability	mm	(in)	±0.05	(±0.002)
Linearity	%		± 0.15	
Electrical Data				
Max. Current @ 48VDC	A_{pk}		4.3	
Max. Current @ 72VDC	A_{pk}		5.9	
Max. Cont. Current [Passive cooling /Fan / Fluid]	A_{pk}		1.1 / 2.1 / -	
Thermal Data				
Max. Winding Temperature (Sensor)	°C		90	
Thermal Resistance [Passive cooling / Fan / Fluid]	°K/W		3.5 / 1 / -	
Thermal Time Constant [Passive cooling / Fan / Fluid]	s		700 / 200 / -	
Mechanical Data				
Slider Length	mm	(in)	580	(23)
Slider Mass	g	(lb)	480	(1.06)

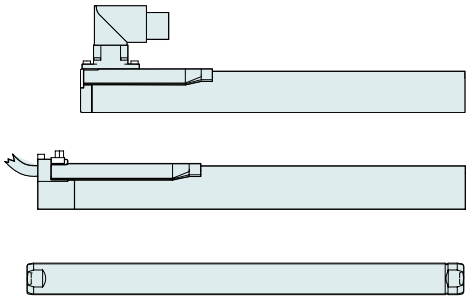

Item	Description	Item-No.
PS01-23x160F-R	Stator with IP67 Connector M17/9(m)	0150-1235
PS01-23x160F-R20	Stator, 0.2 m cable, IP67 con. M17/9(m)	0150-1243
PL01-12x580/540-LC	Slider 'standard LC'	0150-2587
PL02-12x580/540-LC	Slider 'heavy duty LC'	0150-2596

P01-23x160F/550x690-LC

Max. Stroke: 690 mm
Peak Force: 86 N

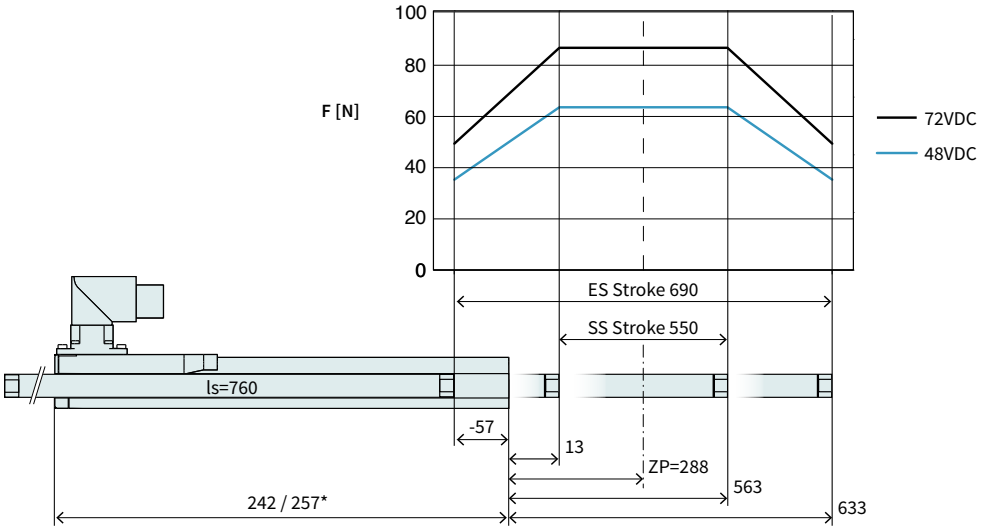

Dimensions in mm
*Cable Type

Technical Data P01-23x160F/550x690-LC				
Stroke				
Standard Stroke (SS)	mm	(in)	550	(21.69)
Extended Stroke (ES)	mm	(in)	690	(27.19)
Force				
Max. Force @ 48VDC	N	(lbf)	62.5	(14.1)
Max. Force @ 72VDC	N	(lbf)	86.4	(19.4)
Max. Cont. Force [Passive cooling/ Fan / Fluid]	N	(lbf)	16 / 30 / -	(3.6 / 6.9 / -)
Max. Border Force relative	%		56	
Force Constant	N/A_{pk}	(lbf/A_{pk})	14.4	(3.24)
Velocity				
Max. Velocity @ 48VDC	m/s	(in/s)	3	(119.9)
Max. Velocity @ 72VDC	m/s	(in/s)	4.5	(179.9)
Position Detection				
Repeatability	mm	(in)	±0.05	(±0.002)
Linearity	%		± 0.15	
Electrical Data				
Max. Current @ 48VDC	A_{pk}		4.3	
Max. Current @ 72VDC	A_{pk}		5.9	
Max. Cont. Current [Passive cooling /Fan / Fluid]	A_{pk}		1.1 / 2.1 / -	
Thermal Data				
Max. Winding Temperature (Sensor)	°C		90	
Thermal Resistance [Passive cooling / Fan / Fluid]	°K/W		3.5 / 1 / -	
Thermal Time Constant [Passive cooling / Fan / Fluid]	s		700 / 200 / -	
Mechanical Data				
Slider Length	mm	(in)	760	(30)
Slider Mass	g	(lb)	630	(1.39)

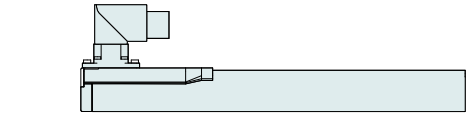





Item	Description	Item-No.
PS01-23x160F-R	Stator with IP67 Connector M17/9(m)	0150-1235
PS01-23x160F-R20	Stator, 0.2 m cable, IP67 con. M17/9(m)	0150-1243
PL01-12x760/720-LC	Slider 'standard LC'	0150-2589
PL01-12x760/720-LC	Slider 'heavy duty LC'	on request

P01-23x160F/640x780-LC

Max. Stroke: 780 mm
Peak Force: 86 N

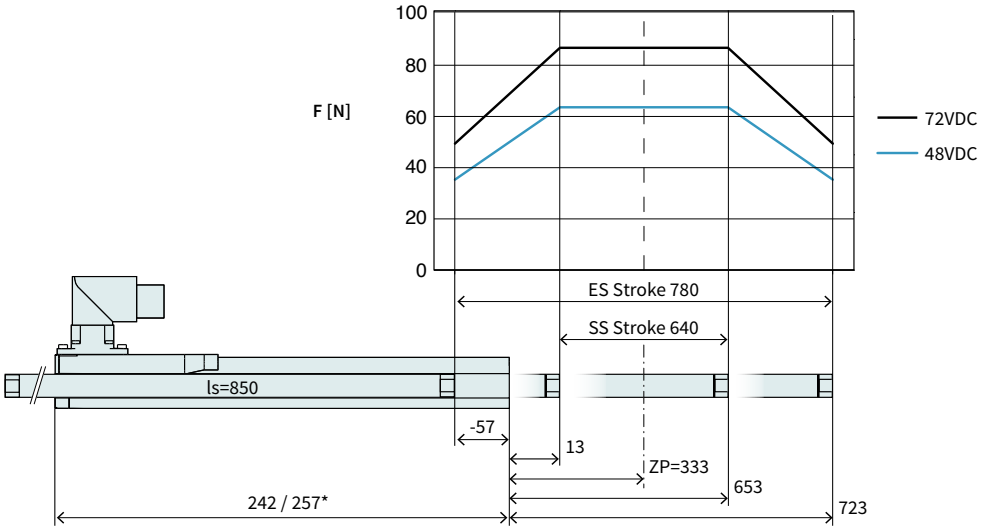

Dimensions in mm
*Cable Type

Technical Data P01-23x160F/640x780-LC				
Stroke				
Standard Stroke (SS)	mm	(in)	640	(25.19)
Extended Stroke (ES)	mm	(in)	780	(30.69)
Force				
Max. Force @ 48VDC	N	(lbf)	62.5	(14.1)
Max. Force @ 72VDC	N	(lbf)	86.4	(19.4)
Max. Cont. Force [Passive cooling/ Fan / Fluid]	N	(lbf)	16 / 30 / -	(3.6 / 6.9 / -)
Max. Border Force relative	%		56	
Force Constant	N/A_{pk}	(lbf/A_{pk})	14.4	(3.24)
Velocity				
Max. Velocity @ 48VDC	m/s	(in/s)	3	(119.9)
Max. Velocity @ 72VDC	m/s	(in/s)	4.5	(179.9)
Position Detection				
Repeatability	mm	(in)	±0.05	(±0.002)
Linearity	%		± 0.15	
Electrical Data				
Max. Current @ 48VDC	A_{pk}		4.3	
Max. Current @ 72VDC	A_{pk}		5.9	
Max. Cont. Current [Passive cooling /Fan / Fluid]	A_{pk}		1.1 / 2.1 / -	
Thermal Data				
Max. Winding Temperature (Sensor)	°C		90	
Thermal Resistance [Passive cooling / Fan / Fluid]	°K/W		3.5 / 1 / -	
Thermal Time Constant [Passive cooling / Fan / Fluid]	s		700 / 200 / -	
Mechanical Data				
Slider Length	mm	(in)	850	(33)
Slider Mass	g	(lb)	700	(1.54)

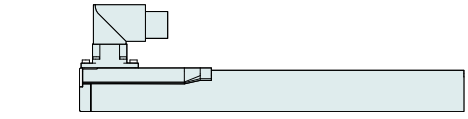





Item	Description	Item-No.
PS01-23x160F-R	Stator with IP67 Connector M17/9(m)	0150-1235
PS01-23x160F-R20	Stator, 0.2 m cable, IP67 con. M17/9(m)	0150-1243
PL01-12x850/810-LC	Slider 'standard LC'	0150-2588
PL02-12x850/810-LC	Slider 'heavy duty LC'	on request

Linear Guides H01



HM01-23x160/80	Linear Module 23x160 with 80 mm Stroke		
H-Guide	H01-23x166/80	H-Guide for P01-23x160, Stroke max 80mm	0150-5017
	H01-23x166/80-GF	H-Guide for P01-23x160, Stroke max 80mm	0150-5077
Stator	PS01-23x160F-R	Linearmotor Stator, Connector R - IP67	0150-1235
	PS01-23x160F-R20	Linearmotor Stator, 0.2m Cable, Connector R - IP67	0150-1243
Slider	PL01-12x290/250-LC	Slider 'standard LC'	0150-2583

HM01-23x160/180	Linear Module 23x160 with 180 mm Stroke		
H-Guide	H01-23x166/180	H-Guide for P01-23x160, Stroke max 180mm	0150-5018
	H01-23x166/180-GF	H-Guide for P01-23x160, Stroke max 180mm	0150-5078
Stator	PS01-23x160F-R	Linearmotor Stator, Connector R - IP67	0150-1235
	PS01-23x160F-R20	Linearmotor Stator, 0.2m Cable, Connector R - IP67	0150-1243
Slider	PL01-12x420/380-LC	Slider 'standard LC'	0150-2585

HM01-23x160/280	Linear Module 23x160 with 280 mm Stroke		
H-Guide	H01-23x166/280	H-Guide for P01-23x160, Stroke max 280mm	0150-5019
	H01-23x166/280-GF	H-Guide for P01-23x160, Stroke max 280mm	0150-5079
Stator	PS01-23x160F-R	Linearmotor Stator, Connector R - IP67	0150-1235
	PS01-23x160F-R20	Linearmotor Stator, 0.2m Cable, Connector R - IP67	0150-1243
Slider	PL01-12x480/440-LC	Slider 'standard LC'	0150-2586

Accessories			
Fan	HV01-23	Fan cooling for H01-23	0150-5050
MagSpring	MF01-20/H23	Flange MagSpring 20 / H-Guide 23	0250-2306
	MA01-20/H23	Flange MagSpring 20 / H-Guide 23	0250-0116
Centering sleeve	HC01-09/04	Centering sleeve D9x4mm	0150-3251

FIND MORE PRODUCT DETAILS IN THE CHAPTER "LINEAR GUIDES".

Motor Cable

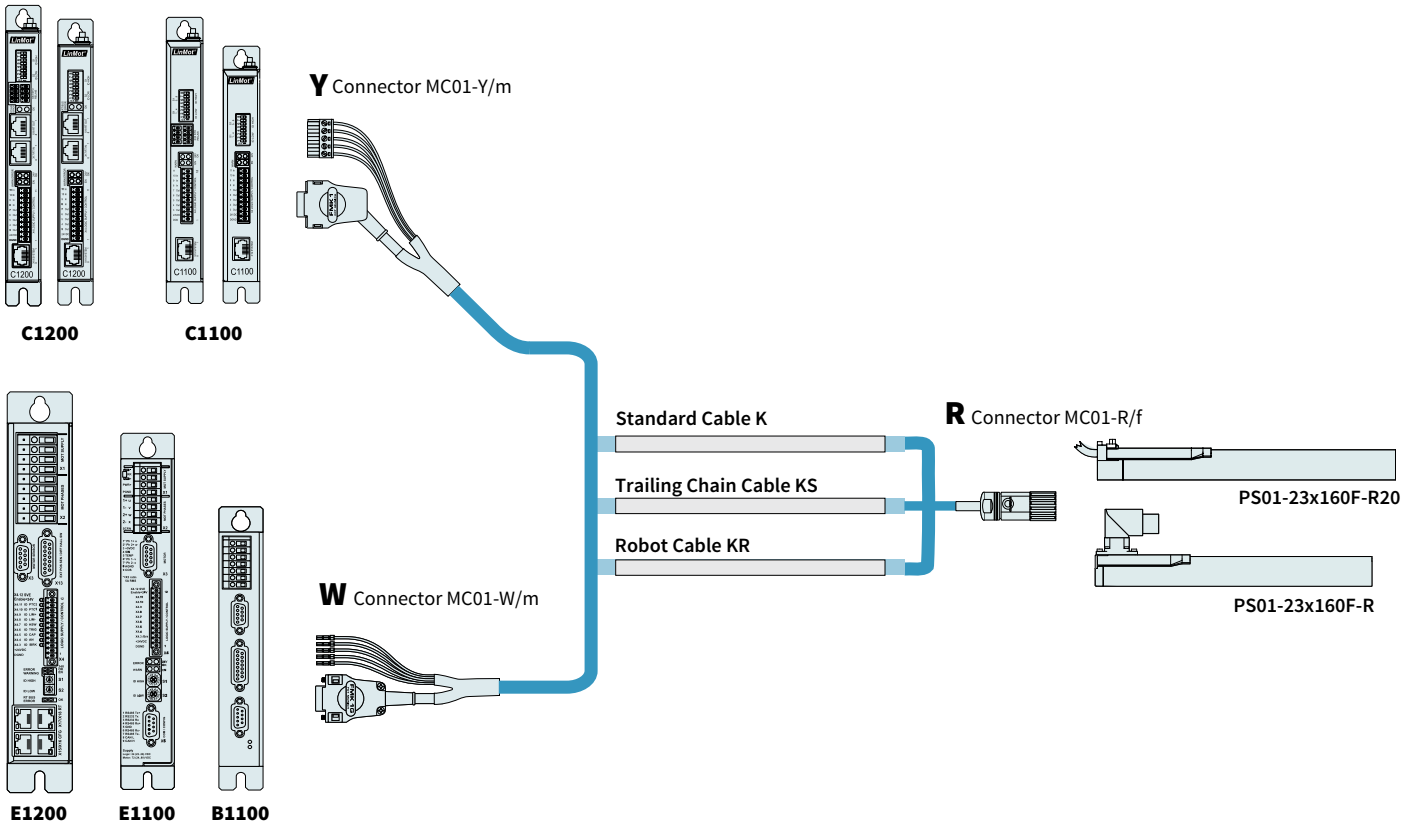

ORDERING INFORMATION

STANDARD CABLE		
Item	**Description**	**Item-No.**
K05-W/R-2	Motor Cable W/R, 2 m	0150-2119
K05-W/R-4	Motor Cable W/R, 4 m	0150-2120
K05-W/R-6	Motor Cable W/R, 6 m	0150-2121
K05-W/R-8	Motor Cable W/R, 8 m	0150-2122
K05-W/R-	Motor Cable W/R, Custom length	0150-3262
K05-W/D-0.4	Motor Cable W/D, 0.4 m	0150-1947
K05-Y/R-2	Motor Cable Y/R, 2 m	0150-2421
K05-Y/R-4	Motor Cable Y/R, 4 m	0150-2422
K05-Y/R-6	Motor Cable Y/R, 6 m	0150-2423
K05-Y/R-8	Motor Cable Y/R, 8 m	0150-2424
K05-Y-Fe/R-	Motor Cable Y/R, Custom length	0150-3501
K05-Y-Fe/D-	Motor Cable Y-Fe/D, Custom length	0150-1947

TRAILING CHAIN CABLE		
Item	**Description**	**Item-No.**
KS05-W/R-4	Trailing Chain Cable W/R, 4 m	0150-2106
KS05-W/R-6	Trailing Chain Cable W/R, 6 m	0150-2131
KS05-W/R-8	Trailing Chain Cable W/R, 8 m	0150-2107
KS05-W/R-	Trailing Chain Cable W/R, Custom length	0150-3256
KS05-Y/R-4	Trailing Chain Cable Y/R, 4 m	0150-2433
KS05-Y/R-6	Trailing Chain Cable Y/R, 6 m	0150-2434
KS05-Y/R-8	Trailing Chain Cable Y/R, 8 m	0150-2435
KS05-Y/R-	Trailing Chain Cable Y/R, Custom length	0150-3507
KS05-Y-Fe/D-	Trailing Chain Cable Y-Fe/D, Custom length	0150-3556

ROBOT CABLE		
Item	**Description**	**Item-No.**
KR05-W/R-	Robot Cable KR05-W/R, Custom length	0150-3336
KR05-Y-Fe/R-	Robot Cable KR05-Y-Fe/R, Custom length	0150-3512

CONNECTOR & CABLE (INDIVIDUAL)		
Item	**Description**	**Item-No.**
MC01-W/m	Motor Connector W/m	0150-3140
MC01-Y-Fe/m	Motor Connector Y-Fe/m	0150-3289
MC01-R/f	Motor Connector R/f	0150-3129
MC01-D/f	Motor Connector D/f	0150-3025
K05-04/05	Motor Cable per m	0150-1920
KS05-04/05	Trailing Chain Cable per m	0150-1938
KR05-04/05	Robot Cable per m	0150-1846

MOTOR FLANGES



Item	Description	Item-No.
PF02-23x120	Flange 23x120 mm	0150-2103
PF02-23x170	Flange 23x170 mm	0150-2117

FIND MORE PRODUCT DETAILS IN THE CHAPTER "ACCESSORIES".

FANS



Item	Description	Item-No.
HV01-23	Fan cooling for H01-23 and PF02-23	0150-5050

FIND MORE PRODUCT DETAILS IN THE CHAPTER "ACCESSORIES".

SLIDER MOUNTING





Item	Description	Item-No.
PLF01-12	Fixed Bearing Set for 12 mm sliders	0150-3085
PLF01-12-Ni	Fixed Bearing Set for 12 mm sliders nickel-plated	0150-3573
PLL02-12	Floating Bearing for PL01-12 Sliders	0150-3111

FIND MORE PRODUCT DETAILS IN THE CHAPTER "ACCESSORIES".

WIPERS



Item	Description	Item-No.
PA01-23/12-F	Wiper front side for PS01-23x...	0150-3125

FIND MORE PRODUCT DETAILS IN THE CHAPTER "ACCESSORIES".

EXTERNAL POSITION SENSORS

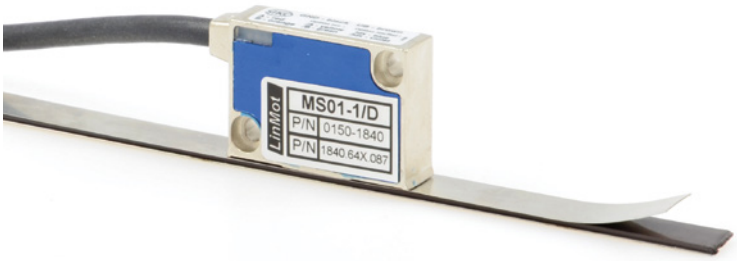

Item	Description	Item-No.
MS01-1/D	Linear Encoder 1µm, A/B (for incremental strip)	0150-1840
MB01-1000	Magnetic incremental strip for MS01-1/D, per cm	0150-1963
KS025-D/D-Encoder	Encoder Cable (Length in m)	0150-3166
KS025-D/D15-Encoder	Encoder Cable (Length in m)	0150-3168

FIND MORE PRODUCT DETAILS IN THE CHAPTER "ACCESSORIES".



Item	Description	Item-No.
MS01-1/D-SSI	Linear Encoder 1µm, A/B (for absolute strip)	0150-2095
MB01-1000-ABS	Magnetic absolute strip for MS01-1/D-SSI (per cm)	0150-2096
EC01-ABS/ENC-12-S	Magnetic absolute strip for MS01-1/D-SSI (per cm)	0150-3616
KSS01-12-D15/ABS-ENC	Special cable for MS01-1/D-SSI on C1100/C1200/C1400/E1200/E1400 Drives	0150-3652

FIND MORE PRODUCT DETAILS IN THE CHAPTER "ACCESSORIES".

LINEAR MOTORS P01-23x160H-HP



- Higher maximum peak force and accelaration
- Increased continuous force and acceleration
- Higher permissible operating temperatures with less self-heating
- Wide range of applications in handling modules as well as in plant and machine construction

LINEAR MOTORS P01-23x160H-HP

Technical Data ____ **155**

Motor Specifications

P01-23x160H/20x160-HP **158**

P01-23x160H/60x200-HP **159**

P01-23x160H/80x220-HP **160**

P01-23x160H/140x280-HP **161**

P01-23x160H/210x350-HP **162**

P01-23x160H/270x410-HP **163**

P01-23x160H/370x510-HP **164**

P01-23x160H/550x690-HP **165**

P01-23x160H/640x780-HP **166**

Linear Guides ____ **167**

Accessories ____ **168**



MOTOR FAMILY P01-23x160H-HP

Technical Data				
Stroke				
Standard Stroke (SS)	mm	(in)	≤ 640	(≤ 25.19)
Extended Stroke (ES)	mm	(in)	≤ 780	(≤ 30.69)
Force				
Max. Force @ 48VDC	N	(lbf)	126	(28.3)
Max. Force @ 72VDC	N	(lbf)	138	(31)
Max. Cont. Force [Passive cooling/ Fan / Fluid]	N	(lbf)	30 / 46 / -	(6.7 / 10 / -)
Max. Border Force relative	%		≤ 56	
Force Constant	N/A_{pk}	(lbf/A_{pk})	12.5	(2.82)
Velocity				
Max. Velocity @ 48VDC	m/s	(in/s)	3.4	(139.9)
Max. Velocity @ 72VDC	m/s	(in/s)	5.2	(209.9)
Position Detection				
Position Resolution	mm	(in)	0.002	(0.0001)
Repeatability	mm	(in)	±0.05	(±0.002)
Position Resolution with ES	mm	(in)	0.001	(0.00004)
Repeatability with ES	mm	(in)	±0.01	(±0.0004)
Linearity with ES	mm	(in)	±0.01	(±0.0004)
Electrical Data				
Max. Current @ 48VDC	A_{pk}		10	
Max. Current @ 72VDC	A_{pk}		10.9	
Max. Cont. Current [Passive cooling /Fan / Fluid]	A_{pk}		2.4 / 3.6 / -	
Terminal Resistance 25 °C / 150 °C	Ohm		3.9 / 5.7	
Terminal Inductivity	mH		0.54	
Magnetic Period	mm	(in)	20	(0.78)
Thermal Data				
Max. Winding Temperature (Sensor)	°C		120	
Thermal Resistance [Passive cooling / Fan / Fluid]	°K/W		2.6 / 1.1 / -	
Thermal Time Constant [Passive cooling / Fan / Fluid]	s		510 / 220 / -	
Mechanical Data				
Stator Diameter	mm	(in)	23	(0.91)
Stator Length [Connector type / Cable type]	mm	(in)	242 / 257	(9.5 / 10)
Stator Mass	g	(lb)	450	(1.0)
Slider Diameter	mm	(in)	12	(0.47)
Slider Length	mm	(in)	230 - 850	(9.1 - 33)
Slider Mass	g	(lb)	180 - 700	(0.4 - 1.54)
IP Code			IP 65	

STATOR CONNECTOR TYPE

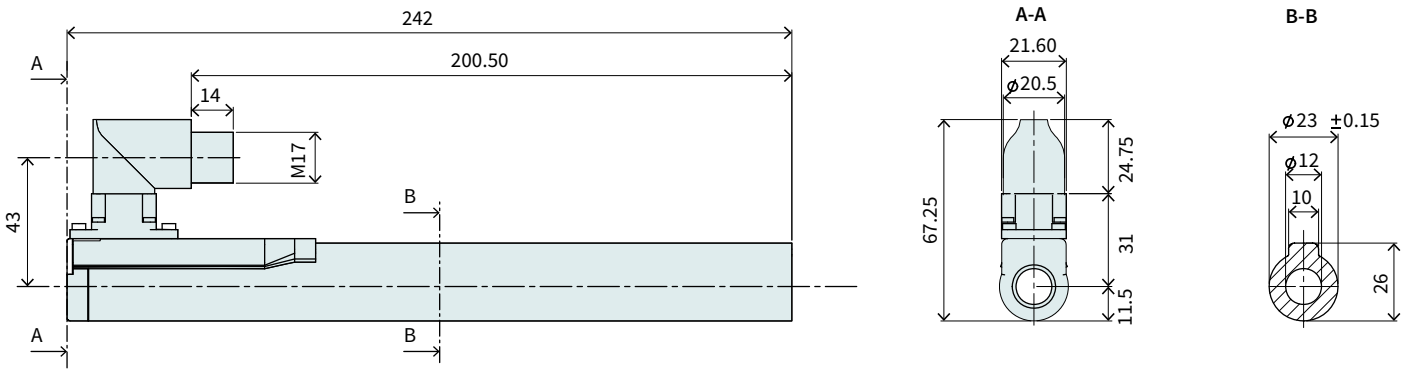

Item	Description	Item-No.
PS01-23x160H-HP-R	Stator HP with IP67 Connector M17/9(m)	0150-1254

STATOR CABLE TYPE

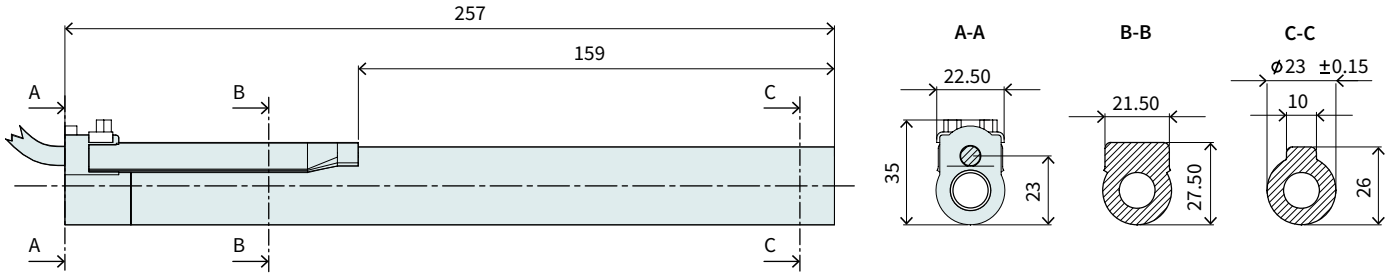

Item	Description	Item-No.
PS01-23x160H-HP-R20	Stator HP, 0.2m Cable, IP67 St. M17/9(m)	0150-1255

CONNECTOR

Motor Connector Wiring	PS01-23x160H-HP-R PS01-23x160H-HP-R20	Wire color motor cable
	R-Connector	
Ph 1+	1	red
Ph 1-	2	pink
Ph 2+	3	blue
Ph 2-	4	grey
+5VDC	A	white
GND	B	inner shield
Sin	C	yellow
Cos	D	green
Temp.	E	black
Shield	Housing	outer Shield

R-Connector

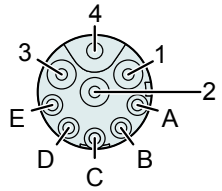

View: Motor Connector, plug side

SLIDER

Slider HP / Heavy Duty HP

Number of grooves determines the slider type
(see chapter 2 / slider) and marks the front end.

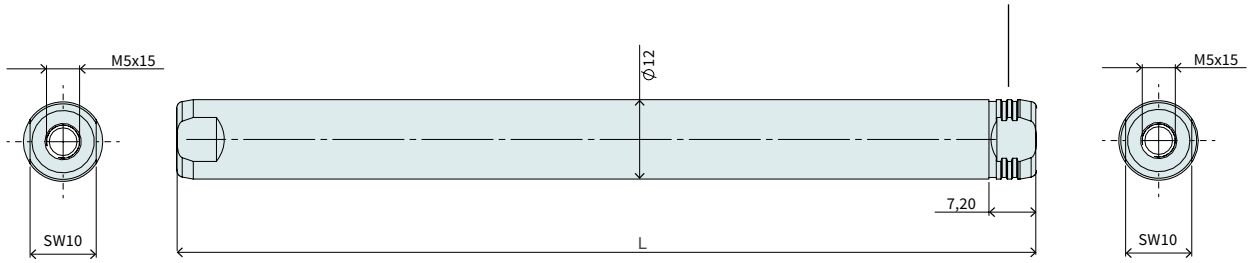

Hollow slider HP

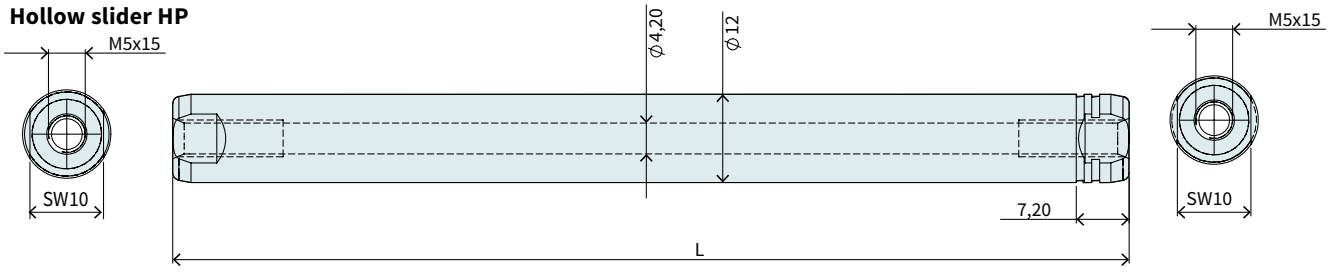

Slider High Performance				
Item	Description	Max. Stroke [mm]	Standard Stroke [mm]	Item-No.
PL01-12x230/190-HP	Slider 'High Performance'	160	20	0150-1519
PL01-12x270/230-HP	Slider 'High Performance'	200	60	0150-1520
PL01-12x290/250-HP	Slider 'High Performance'	220	80	0150-1521
PL01-12x350/310-HP	Slider 'High Performance'	280	140	0150-1522
PL01-12x420/380-HP	Slider 'High Performance'	350	210	0150-1523
PL01-12x480/440-HP	Slider 'High Performance'	410	270	0150-1524
PL01-12x580/540-HP	Slider 'High Performance'	510	370	0150-1525
PL01-12x760/720-HP	Slider 'High Performance'	690	550	0150-1526
PL01-12x850/810-HP	Slider 'High Performance'	780	640	0150-1527

Slider Heavy Duty High Performance				
Item	Description	Max. Stroke [mm]	Standard Stroke [mm]	Item-No.
PL02-12x230/190-HP	Slider 'heavy duty' 'High Performance	160	20	0150-1552
PL02-12x270/230-HP	Slider 'heavy duty' 'High Performance	200	60	0150-1533
PL02-12x290/250-HP	Slider 'heavy duty' 'High Performance	220	80	0150-1495
PL02-12x350/310-HP	Slider 'heavy duty' 'High Performance	280	140	0150-1555
PL02-12x420/380-HP	Slider 'heavy duty' 'High Performance	350	210	0150-1554
PL02-12x480/440-HP	Slider 'heavy duty' 'High Performance	410	270	0150-2519
PL02-12x580/540-HP	Slider 'heavy duty' 'High Performance	510	370	0150-2520
PL02-12x760/720-HP	Slider 'heavy duty' 'High Performance	690	550	0150-2521
PL02-12x850/810-HP	Slider 'heavy duty' 'High Performance	780	640	0150-2516

Hollow slider High Performance				
Item	Description	Max. Stroke [mm]	Standard Stroke [mm]	Item-No.
PL01-12x230/190-HP-L	Slider 'High Performance L'	160	20	0150-2546
PL01-12x270/230-HP-L	Slider 'High Performance L'	200	60	0150-2557
PL01-12x290/250-HP-L	Slider 'High Performance L'	220	80	0150-3690
PL01-12x350/310-HP-L	Slider 'High Performance L'	280	140	0150-3691
PL01-12x420/380-HP-L	Slider 'High Performance L'	350	210	0150-3692
PL01-12x480/440-HP-L	Slider 'High Performance L'	410	270	0150-3693
PL01-12x580/540-HP-L	Slider 'High Performance L'	510	370	0150-3694
PL01-12x760/720-HP-L	Slider 'High Performance L'	690	550	0150-3695
PL01-12x850/810-HP-L	Slider 'High Performance L'	780	640	on request

P01-23x160H/20x160-HP

Max. Stroke: 160 mm
Peak Force: 138 N

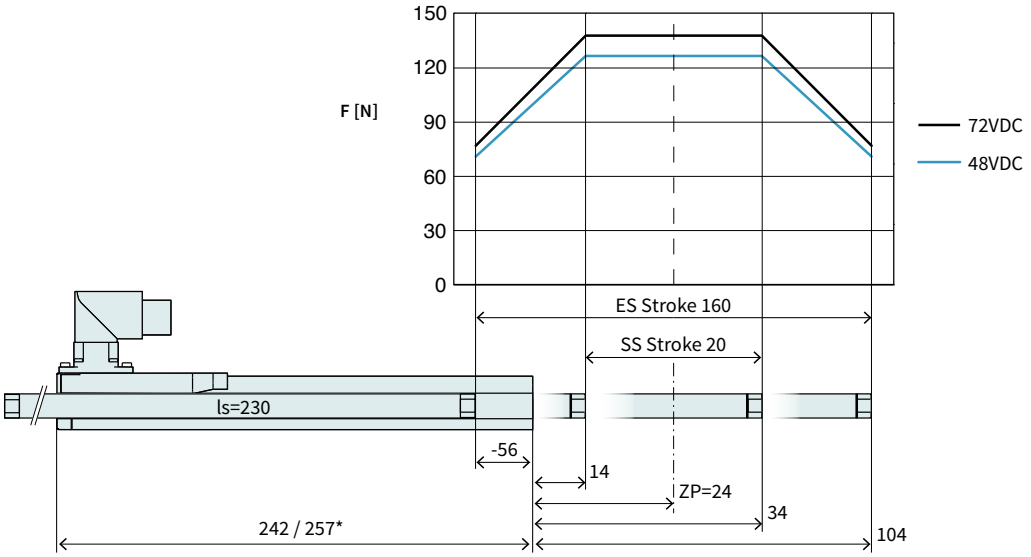

Dimensions in mm
*Cable Type

Technical Data P01-23x160H/20x160-HP				
Stroke				
Standard Stroke (SS)	mm	(in)	20	(0.78)
Extended Stroke (ES)	mm	(in)	160	(6.29)
Force				
Max. Force @ 48VDC	N	(lbf)	126	(28.3)
Max. Force @ 72VDC	N	(lbf)	138	(31)
Max. Cont. Force [Passive cooling/ Fan / Fluid]	N	(lbf)	30 / 46 / -	(6.7 / 10 / -)
Max. Border Force relative	%		56	
Force Constant	N/A_{pk}	(lbf/A_{pk})	12.5	(2.82)
Velocity				
Max. Velocity @ 48VDC	m/s	(in/s)	3.4	(139.9)
Max. Velocity @ 72VDC	m/s	(in/s)	5.2	(209.9)
Position Detection				
Repeatability	mm	(in)	±0.05	(±0.002)
Linearity	%		± 0.25	
Electrical Data				
Max. Current @ 48VDC	A_{pk}		10	
Max. Current @ 72VDC	A_{pk}		10.9	
Max. Cont. Current [Passive cooling /Fan / Fluid]	A_{pk}		2.4 / 3.6 / -	
Thermal Data				
Max. Winding Temperature (Sensor)	°C		120	
Thermal Resistance [Passive cooling / Fan / Fluid]	°K/W		2.6 / 1.1 / -	
Thermal Time Constant [Passive cooling / Fan / Fluid]	s		510 / 220 / -	
Mechanical Data				
Slider Length	mm	(in)	230	(9.1)
Slider Mass	g	(lb)	180	(0.4)

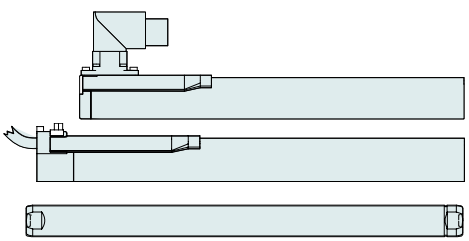

Item	Description	Item-No.
PS01-23x160H-HP-R	Stator HP with IP67 Connector M17/9(m)	0150-1254
PS01-23x160H-HP-R20	Stator HP, 0.2m Cable, IP67 St. M17/9(m)	0150-1255
PL01-12x230/190-HP	Slider 'High Performance'	0150-1519
PL02-12x230/190-HP	Slider 'heavy duty' 'High Performace	0150-1552
PL01-12x230/190-HP-L*	Slider 'High Performance L'	0150-2546

* With this slider, the motor specifications above change.

P01-23x160H/60x200-HP

Max. Stroke: 200 mm
Peak Force: 138 N

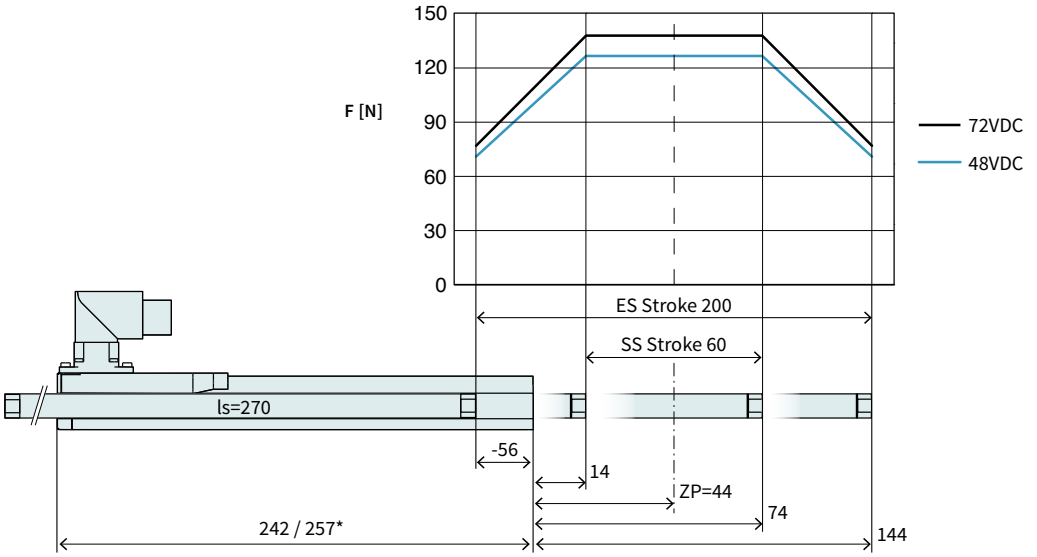

Dimensions in mm
*Cable Type

Technical Data P01-23x160H/60x200-HP				
Stroke				
Standard Stroke (SS)	mm	(in)	60	(2.35)
Extended Stroke (ES)	mm	(in)	200	(7.86)
Force				
Max. Force @ 48VDC	N	(lbf)	126	(28.3)
Max. Force @ 72VDC	N	(lbf)	138	(31)
Max. Cont. Force [Passive cooling/ Fan / Fluid]	N	(lbf)	30 / 46 / -	(6.7 / 10 / -)
Max. Border Force relative	%		56	
Force Constant	N/A_{pk}	(lbf/A_{pk})	12.5	(2.82)
Velocity				
Max. Velocity @ 48VDC	m/s	(in/s)	3.4	(139.9)
Max. Velocity @ 72VDC	m/s	(in/s)	5.2	(209.9)
Position Detection				
Repeatability	mm	(in)	±0.05	(±0.002)
Linearity	%		± 0.2	
Electrical Data				
Max. Current @ 48VDC	A_{pk}		10	
Max. Current @ 72VDC	A_{pk}		10.9	
Max. Cont. Current [Passive cooling /Fan / Fluid]	A_{pk}		2.4 / 3.6 / -	
Thermal Data				
Max. Winding Temperature (Sensor)	°C		120	
Thermal Resistance [Passive cooling / Fan / Fluid]	°K/W		2.6 / 1.1 / -	
Thermal Time Constant [Passive cooling / Fan / Fluid]	s		510 / 220 / -	
Mechanical Data				
Slider Length	mm	(in)	270	(11)
Slider Mass	g	(lb)	215	(0.47)

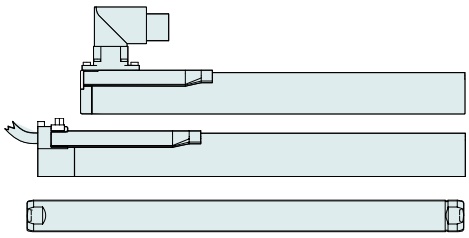

Item	Description	Item-No.
PS01-23x160H-HP-R	Stator HP with IP67 Connector M17/9(m)	0150-1254
PS01-23x160H-HP-R20	Stator HP, 0.2m Cable, IP67 St. M17/9(m)	0150-1255
PL01-12x270/230-HP	Slider 'High Performance'	0150-1520
PL02-12x270/230-HP	Slider 'heavy duty' 'High Performace	0150-1533
PL01-12x270/230-HP-L*	Slider 'High Performance L'	0150-2557

* With this slider, the motor specifications above change.

P01-23x160H/80x220-HP

Max. Stroke: 220 mm
Peak Force: 138 N

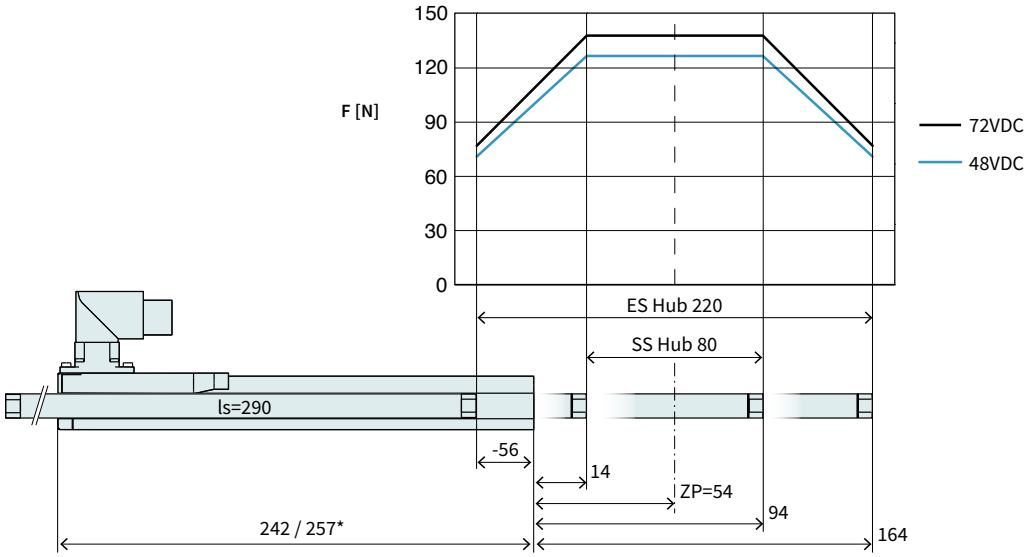

Dimensions in mm
*Cable Type

Technical Data P01-23x160H/80x220-HP				
Stroke				
Standard Stroke (SS)	mm	(in)	80	(3.14)
Extended Stroke (ES)	mm	(in)	220	(8.65)
Force				
Max. Force @ 48VDC	N	(lbf)	126	(28.3)
Max. Force @ 72VDC	N	(lbf)	138	(31)
Max. Cont. Force [Passive cooling/ Fan / Fluid]	N	(lbf)	30 / 46 / -	(6.7 / 10 / -)
Max. Border Force relative	%		56	
Force Constant	N/A_{pk}	(lbf/A_{pk})	12.5	(2.82)
Velocity				
Max. Velocity @ 48VDC	m/s	(in/s)	3.4	(139.9)
Max. Velocity @ 72VDC	m/s	(in/s)	5.2	(209.9)
Position Detection				
Repeatability	mm	(in)	±0.05	(±0.002)
Linearity	%		± 0.2	
Electrical Data				
Max. Current @ 48VDC	A_{pk}		10	
Max. Current @ 72VDC	A_{pk}		10.9	
Max. Cont. Current [Passive cooling /Fan / Fluid]	A_{pk}		2.4 / 3.6 / -	
Thermal Data				
Max. Winding Temperature (Sensor)	°C		120	
Thermal Resistance [Passive cooling / Fan / Fluid]	°K/W		2.6 / 1.1 / -	
Thermal Time Constant [Passive cooling / Fan / Fluid]	s		510 / 220 / -	
Mechanical Data				
Slider Length	mm	(in)	290	(11)
Slider Mass	g	(lb)	230	(0.51)

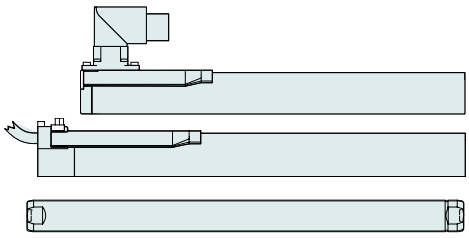

Item	Description	Item-No.
PS01-23x160H-HP-R	Stator HP with IP67 Connector M17/9(m)	0150-1254
PS01-23x160H-HP-R20	Stator HP, 0.2m Cable, IP67 St. M17/9(m)	0150-1255
PL01-12x290/250-HP	Slider 'High Performance'	0150-1521
PL02-12x290/250-HP	Slider 'heavy duty' 'High Performace	0150-1495
PL01-12x290/250-HP-L*	Slider 'High Performance L'	0150-3690

* With this slider, the motor specifications above change.

P01-23x160H/140x280-HP

Max. Stroke: 280 mm
Peak Force: 138 N

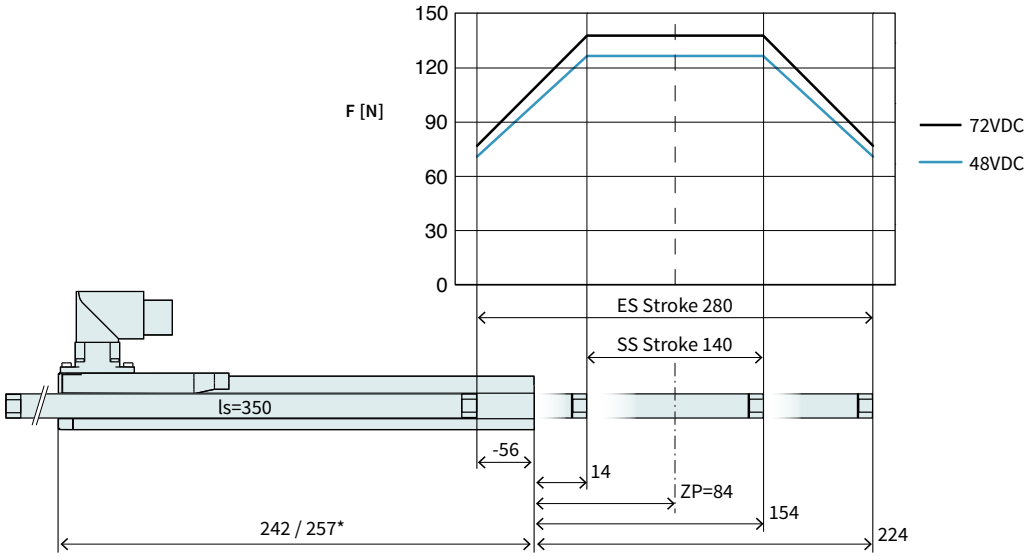

Dimensions in mm
*Cable Type

Technical Data P01-23x160H/140x280-HP				
Stroke				
Standard Stroke (SS)	mm	(in)	140	(5.5)
Extended Stroke (ES)	mm	(in)	280	(10.99)
Force				
Max. Force @ 48VDC	N	(lbf)	126	(28.3)
Max. Force @ 72VDC	N	(lbf)	138	(31)
Max. Cont. Force [Passive cooling/ Fan / Fluid]	N	(lbf)	30 / 46 / -	(6.7 / 10 / -)
Max. Border Force relative	%		56	
Force Constant	N/A_{pk}	(lbf/A_{pk})	12.5	(2.82)
Velocity				
Max. Velocity @ 48VDC	m/s	(in/s)	3.4	(139.9)
Max. Velocity @ 72VDC	m/s	(in/s)	5.2	(209.9)
Position Detection				
Repeatability	mm	(in)	±0.05	(±0.002)
Linearity	%		± 0.2	
Electrical Data				
Max. Current @ 48VDC	A_{pk}		10	
Max. Current @ 72VDC	A_{pk}		10.9	
Max. Cont. Current [Passive cooling /Fan / Fluid]	A_{pk}		2.4 / 3.6 / -	
Thermal Data				
Max. Winding Temperature (Sensor)	°C		120	
Thermal Resistance [Passive cooling / Fan / Fluid]	°K/W		2.6 / 1.1 / -	
Thermal Time Constant [Passive cooling / Fan / Fluid]	s		510 / 220 / -	
Mechanical Data				
Slider Length	mm	(in)	350	(14)
Slider Mass	g	(lb)	280	(0.62)

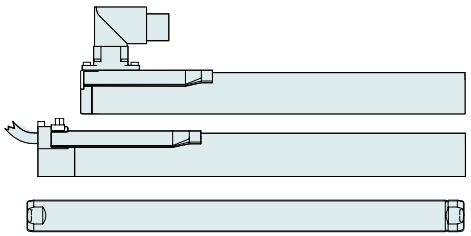

Item	Description	Item-No.
PS01-23x160H-HP-R	Stator HP with IP67 Connector M17/9(m)	0150-1254
PS01-23x160H-HP-R20	Stator HP, 0.2m Cable, IP67 St. M17/9(m)	0150-1255
PL01-12x350/310-HP	Slider 'High Performance'	0150-1522
PL02-12x350/310-HP	Slider 'heavy duty' 'High Performace	0150-1555
PL01-12x350/310-HP-L*	Slider 'High Performance L'	0150-3691

* With this slider, the motor specifications above change.

P01-23x160H/210x350-HP

Max. Stroke: 350 mm
Peak Force: 138 N

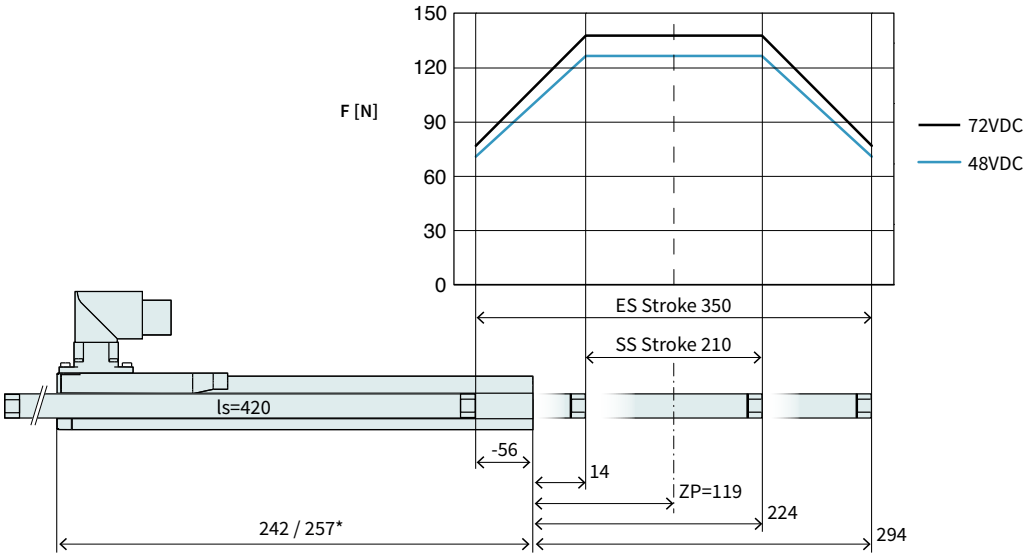

Dimensions in mm
*Cable Type

Technical Data P01-23x160H/210x350-HP				
Stroke				
Standard Stroke (SS)	mm	(in)	210	(8.26)
Extended Stroke (ES)	mm	(in)	350	(13.8)
Force				
Max. Force @ 48VDC	N	(lbf)	126	(28.3)
Max. Force @ 72VDC	N	(lbf)	138	(31)
Max. Cont. Force [Passive cooling/ Fan / Fluid]	N	(lbf)	30 / 46 / -	(6.7 / 10 / -)
Max. Border Force relative	%		56	
Force Constant	N/A_{pk}	(lbf/A_{pk})	12.5	(2.82)
Velocity				
Max. Velocity @ 48VDC	m/s	(in/s)	3.4	(139.9)
Max. Velocity @ 72VDC	m/s	(in/s)	5.2	(209.9)
Position Detection				
Repeatability	mm	(in)	±0.05	(±0.002)
Linearity	%		± 0.15	
Electrical Data				
Max. Current @ 48VDC	A_{pk}		10	
Max. Current @ 72VDC	A_{pk}		10.9	
Max. Cont. Current [Passive cooling /Fan / Fluid]	A_{pk}		2.4 / 3.6 / -	
Thermal Data				
Max. Winding Temperature (Sensor)	°C		120	
Thermal Resistance [Passive cooling / Fan / Fluid]	°K/W		2.6 / 1.1 / -	
Thermal Time Constant [Passive cooling / Fan / Fluid]	s		510 / 220 / -	
Mechanical Data				
Slider Length	mm	(in)	420	(17)
Slider Mass	g	(lb)	340	(0.75)

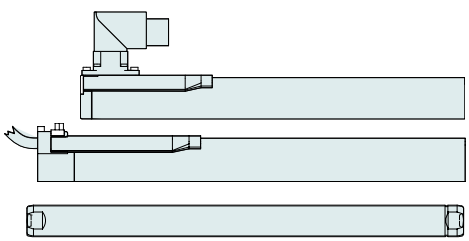

Item	Description	Item-No.
PS01-23x160H-HP-R	Stator HP with IP67 Connector M17/9(m)	0150-1254
PS01-23x160H-HP-R20	Stator HP, 0.2m Cable, IP67 St. M17/9(m)	0150-1255
PL01-12x420/380-HP	Slider 'High Performance'	0150-1523
PL02-12x420/380-HP	Slider 'heavy duty' 'High Performace	0150-1554
PL01-12x420/380-HP-L*	Slider 'High Performance L'	0150-3692

* With this slider, the motor specifications above change.

P01-23x160H/270x410-HP

Max. Stroke: 410 mm
Peak Force: 138 N

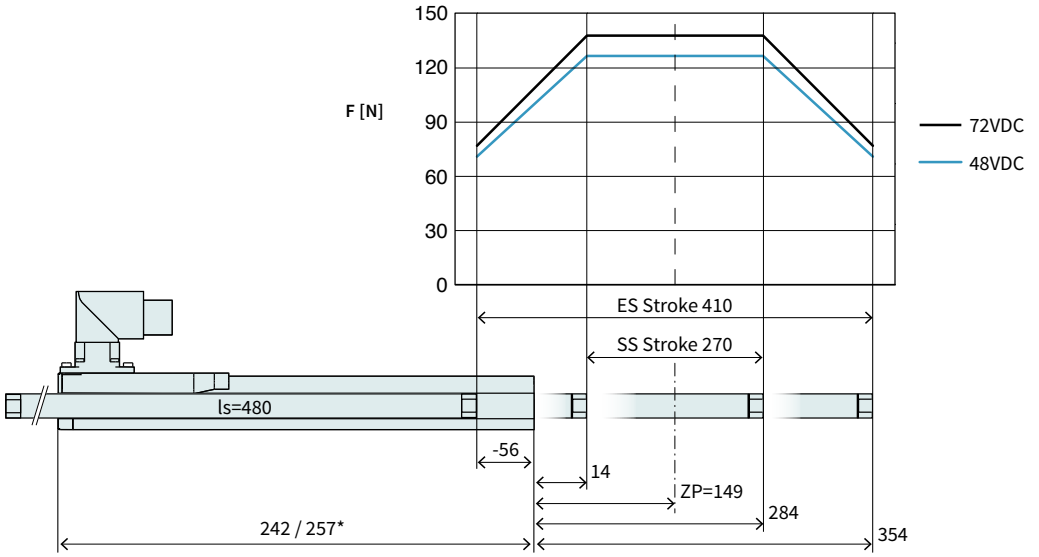

Dimensions in mm
*Cable Type

Technical Data P01-23x160H/270x410-HP				
Stroke				
Standard Stroke (SS)	mm	(in)	270	(10.59)
Extended Stroke (ES)	mm	(in)	410	(16.1)
Force				
Max. Force @ 48VDC	N	(lbf)	126	(28.3)
Max. Force @ 72VDC	N	(lbf)	138	(31)
Max. Cont. Force [Passive cooling/ Fan / Fluid]	N	(lbf)	30 / 46 / -	(6.7 / 10 / -)
Max. Border Force relative	%		56	
Force Constant	N/A_{pk}	(lbf/A_{pk})	12.5	(2.82)
Velocity				
Max. Velocity @ 48VDC	m/s	(in/s)	3.4	(139.9)
Max. Velocity @ 72VDC	m/s	(in/s)	5.2	(209.9)
Position Detection				
Repeatability	mm	(in)	±0.05	(±0.002)
Linearity	%		± 0.15	
Electrical Data				
Max. Current @ 48VDC	A_{pk}		10	
Max. Current @ 72VDC	A_{pk}		10.9	
Max. Cont. Current [Passive cooling /Fan / Fluid]	A_{pk}		2.4 / 3.6 / -	
Thermal Data				
Max. Winding Temperature (Sensor)	°C		120	
Thermal Resistance [Passive cooling / Fan / Fluid]	°K/W		2.6 / 1.1 / -	
Thermal Time Constant [Passive cooling / Fan / Fluid]	s		510 / 220 / -	
Mechanical Data				
Slider Length	mm	(in)	480	(19)
Slider Mass	g	(lb)	390	(0.86)

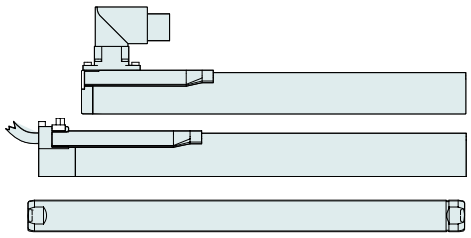

Item	Description	Item-No.
PS01-23x160H-HP-R	Stator HP with IP67 Connector M17/9(m)	0150-1254
PS01-23x160H-HP-R20	Stator HP, 0.2m Cable, IP67 St. M17/9(m)	0150-1255
PL01-12x480/440-HP	Slider 'High Performance'	0150-1524
PL02-12x480/440-HP	Slider 'heavy duty' 'High Performace	0150-2519
PL01-12x480/440-HP-L*	Slider 'High Performance L'	0150-3693

* With this slider, the motor specifications above change.

P01-23x160H/370x510-HP

Max. Stroke: 510 mm
Peak Force: 138 N

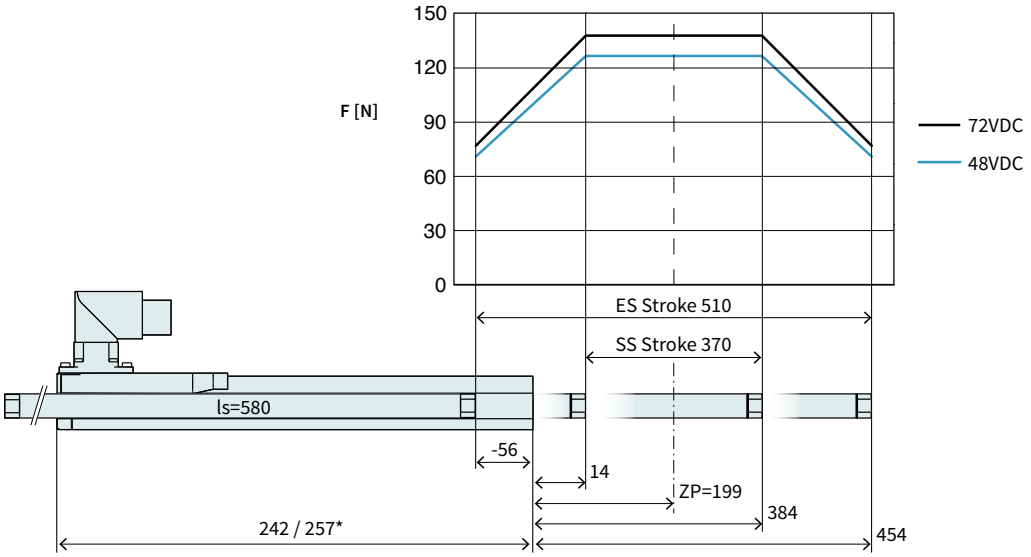

Dimensions in mm
*Cable Type

Technical Data P01-23x160H/370x510-HP				
Stroke				
Standard Stroke (SS)	mm	(in)	370	(14.59)
Extended Stroke (ES)	mm	(in)	510	(20.1)
Force				
Max. Force @ 48VDC	N	(lbf)	126	(28.3)
Max. Force @ 72VDC	N	(lbf)	138	(31)
Max. Cont. Force [Passive cooling/ Fan / Fluid]	N	(lbf)	30 / 46 / -	(6.7 / 10 / -)
Max. Border Force relative	%		56	
Force Constant	N/A_{pk}	(lbf/A_{pk})	12.5	(2.82)
Velocity				
Max. Velocity @ 48VDC	m/s	(in/s)	3.4	(139.9)
Max. Velocity @ 72VDC	m/s	(in/s)	5.2	(209.9)
Position Detection				
Repeatability	mm	(in)	±0.05	(±0.002)
Linearity	%		± 0.15	
Electrical Data				
Max. Current @ 48VDC	A_{pk}		10	
Max. Current @ 72VDC	A_{pk}		10.9	
Max. Cont. Current [Passive cooling /Fan / Fluid]	A_{pk}		2.4 / 3.6 / -	
Thermal Data				
Max. Winding Temperature (Sensor)	°C		120	
Thermal Resistance [Passive cooling / Fan / Fluid]	°K/W		2.6 / 1.1 / -	
Thermal Time Constant [Passive cooling / Fan / Fluid]	s		510 / 220 / -	
Mechanical Data				
Slider Length	mm	(in)	580	(23)
Slider Mass	g	(lb)	480	(1.06)

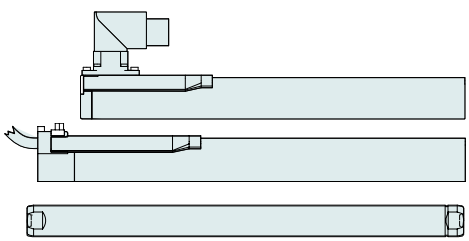

Item	Description	Item-No.
PS01-23x160H-HP-R	Stator HP with IP67 Connector M17/9(m)	0150-1254
PS01-23x160H-HP-R20	Stator HP, 0.2m Cable, IP67 St. M17/9(m)	0150-1255
PL01-12x580/540-HP	Slider 'High Performance'	0150-1525
PL02-12x580/540-HP	Slider 'heavy duty' 'High Performace	0150-2520
PL01-12x580/540-HP-L*	Slider 'High Performance L'	0150-3694

* With this slider, the motor specifications above change.

P01-23x160H/550x690-HP

Max. Stroke: 690 mm
Peak Force: 138 N

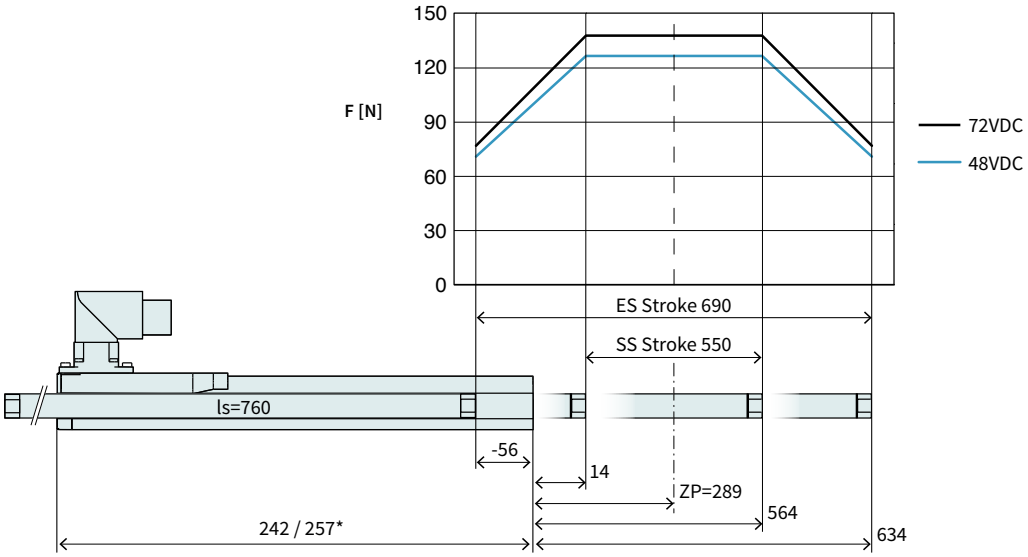

Dimensions in mm
*Cable Type

Technical Data P01-23x160H/550x690-HP				
Stroke				
Standard Stroke (SS)	mm	(in)	550	(21.69)
Extended Stroke (ES)	mm	(in)	690	(27.19)
Force				
Max. Force @ 48VDC	N	(lbf)	126	(28.3)
Max. Force @ 72VDC	N	(lbf)	138	(31)
Max. Cont. Force [Passive cooling/ Fan / Fluid]	N	(lbf)	30 / 46 / -	(6.7 / 10 / -)
Max. Border Force relative	%		56	
Force Constant	N/A_{pk}	(lbf/A_{pk})	12.5	(2.82)
Velocity				
Max. Velocity @ 48VDC	m/s	(in/s)	3.4	(139.9)
Max. Velocity @ 72VDC	m/s	(in/s)	5.2	(209.9)
Position Detection				
Repeatability	mm	(in)	±0.05	(±0.002)
Linearity	%		± 0.15	
Electrical Data				
Max. Current @ 48VDC	A_{pk}		10	
Max. Current @ 72VDC	A_{pk}		10.9	
Max. Cont. Current [Passive cooling /Fan / Fluid]	A_{pk}		2.4 / 3.6 / -	
Thermal Data				
Max. Winding Temperature (Sensor)	°C		120	
Thermal Resistance [Passive cooling / Fan / Fluid]	°K/W		2.6 / 1.1 / -	
Thermal Time Constant [Passive cooling / Fan / Fluid]	s		510 / 220 / -	
Mechanical Data				
Slider Length	mm	(in)	760	(30)
Slider Mass	g	(lb)	630	(1.39)

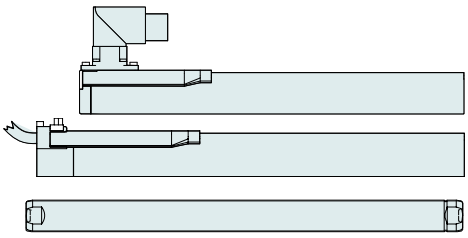

Item	Description	Item-No.
PS01-23x160H-HP-R	Stator HP with IP67 Connector M17/9(m)	0150-1254
PS01-23x160H-HP-R20	Stator HP, 0.2m Cable, IP67 St. M17/9(m)	0150-1255
PL01-12x760/720-HP	Slider 'High Performance'	0150-1526
PL02-12x760/720-HP	Slider 'heavy duty' 'High Performace	0150-2521
PL01-12x760/720-HP-L*	Slider 'High Performance L'	0150-3695

* With this slider, the motor specifications above change.

P01-23x160H/640x780-HP

Max. Stroke: 780 mm
Peak Force: 138 N

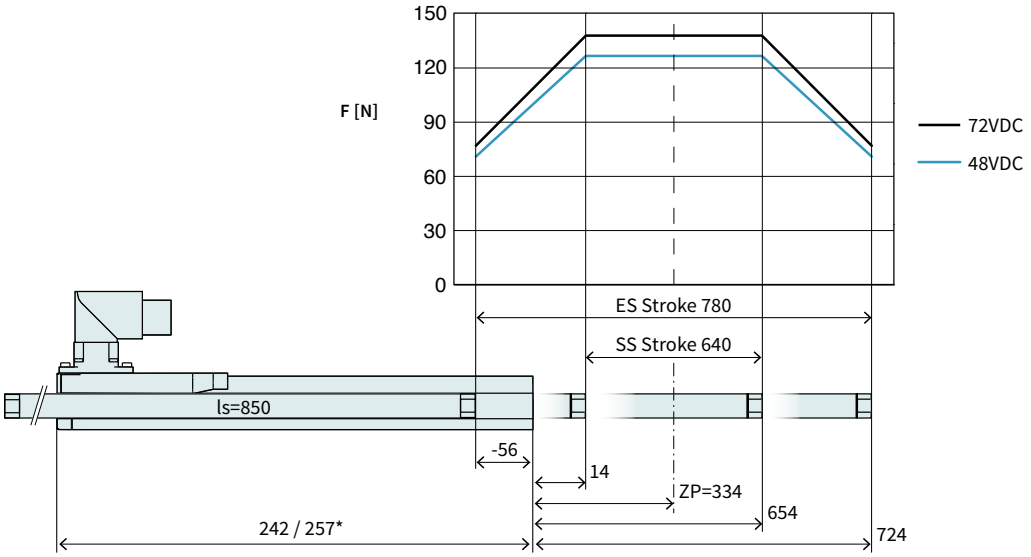

Dimensions in mm
*Cable Type

Technical Data P01-23x160H/640x780-HP				
Stroke				
Standard Stroke (SS)	mm	(in)	640	(25.19)
Extended Stroke (ES)	mm	(in)	780	(30.69)
Force				
Max. Force @ 48VDC	N	(lbf)	126	(28.3)
Max. Force @ 72VDC	N	(lbf)	138	(31)
Max. Cont. Force [Passive cooling/ Fan / Fluid]	N	(lbf)	30 / 46 / -	(6.7 / 10 / -)
Max. Border Force relative	%		56	
Force Constant	N/A_{pk}	(lbf/A_{pk})	12.5	(2.82)
Velocity				
Max. Velocity @ 48VDC	m/s	(in/s)	3.4	(139.9)
Max. Velocity @ 72VDC	m/s	(in/s)	5.2	(209.9)
Position Detection				
Repeatability	mm	(in)	±0.05	(±0.002)
Linearity	%		± 0.15	
Electrical Data				
Max. Current @ 48VDC	A_{pk}		10	
Max. Current @ 72VDC	A_{pk}		10.9	
Max. Cont. Current [Passive cooling /Fan / Fluid]	A_{pk}		2.4 / 3.6 / -	
Thermal Data				
Max. Winding Temperature (Sensor)	°C		120	
Thermal Resistance [Passive cooling / Fan / Fluid]	°K/W		2.6 / 1.1 / -	
Thermal Time Constant [Passive cooling / Fan / Fluid]	s		510 / 220 / -	
Mechanical Data				
Slider Length	mm	(in)	850	(33)
Slider Mass	g	(lb)	700	(1.54)

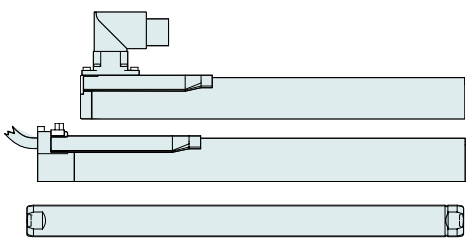

Item	Description	Item-No.
PS01-23x160H-HP-R	Stator HP with IP67 Connector M17/9(m)	0150-1254
PS01-23x160H-HP-R20	Stator HP, 0.2m Cable, IP67 St. M17/9(m)	0150-1255
PL01-12x850/810-HP	Slider 'High Performance'	0150-1527
PL02-12x850/810-HP	Slider 'heavy duty' 'High Performace	0150-2516
PL01-12x850/810-HP-L*	Slider 'High Performance L'	on request

* With this slider, the motor specifications above change.

Linear Guides H01



HM01-23x160/80	Linear Module 23x160 with 80 mm Stroke		
H-Guide	H01-23x166/80	H-Guide for P01-23x160, Stroke max 80mm	0150-5017
	H01-23x166/80-GF	H-Guide for P01-23x160, Stroke max 80mm	0150-5077
Stator	PS01-23x160H-HP-R	Stator HP with IP67 Connector M17/9(m)	0150-1254
	PS01-23x160H-HP-R20	Stator HP, 0.2m Cable, IP67 St. M17/9(m)	0150-1255
Slider	PL01-12x290/250-HP	Slider 'High Performance'	0150-1521

HM01-23x160/180	Linear Module 23x160 with 180 mm Stroke		
H-Guide	H01-23x166/180	H-Guide for P01-23x160, Stroke max 180mm	0150-5018
	H01-23x166/180-GF	H-Guide for P01-23x160, Stroke max 180mm	0150-5078
Stator	PS01-23x160H-HP-R	Stator HP with IP67 Connector M17/9(m)	0150-1254
	PS01-23x160H-HP-R20	Stator HP, 0.2m Cable, IP67 St. M17/9(m)	0150-1255
Slider	PL01-12x420/380-HP	Slider 'High Performance'	0150-1523

HM01-23x160/280	Linear Module 23x160 with 280 mm Stroke		
H-Guide	H01-23x166/280	H-Guide for P01-23x160, Stroke max 280mm	0150-5019
	H01-23x166/280-GF	H-Guide for P01-23x160, Stroke max 280mm	0150-5079
Stator	PS01-23x160H-HP-R	Stator HP with IP67 Connector M17/9(m)	0150-1254
	PS01-23x160H-HP-R20	Stator HP, 0.2m Cable, IP67 St. M17/9(m)	0150-1255
Slider	PL01-12x480/440-HP	Slider 'High Performance'	0150-1524

Accessories			
Fan	HV01-23	Fan cooling for H01-23	0150-5050
MagSpring	MF01-20/H23	Flange MagSpring 20 / H-Guide 23	0250-2306
	MA01-20/H23	Adapter MagSpring 20 / H-Guide 23	0250-0116
Centering sleeve	HC01-09/04	Centering sleeve D9x4mm	0150-3251

FIND MORE PRODUCT DETAILS IN THE CHAPTER "LINEAR GUIDES".

Motor Cable

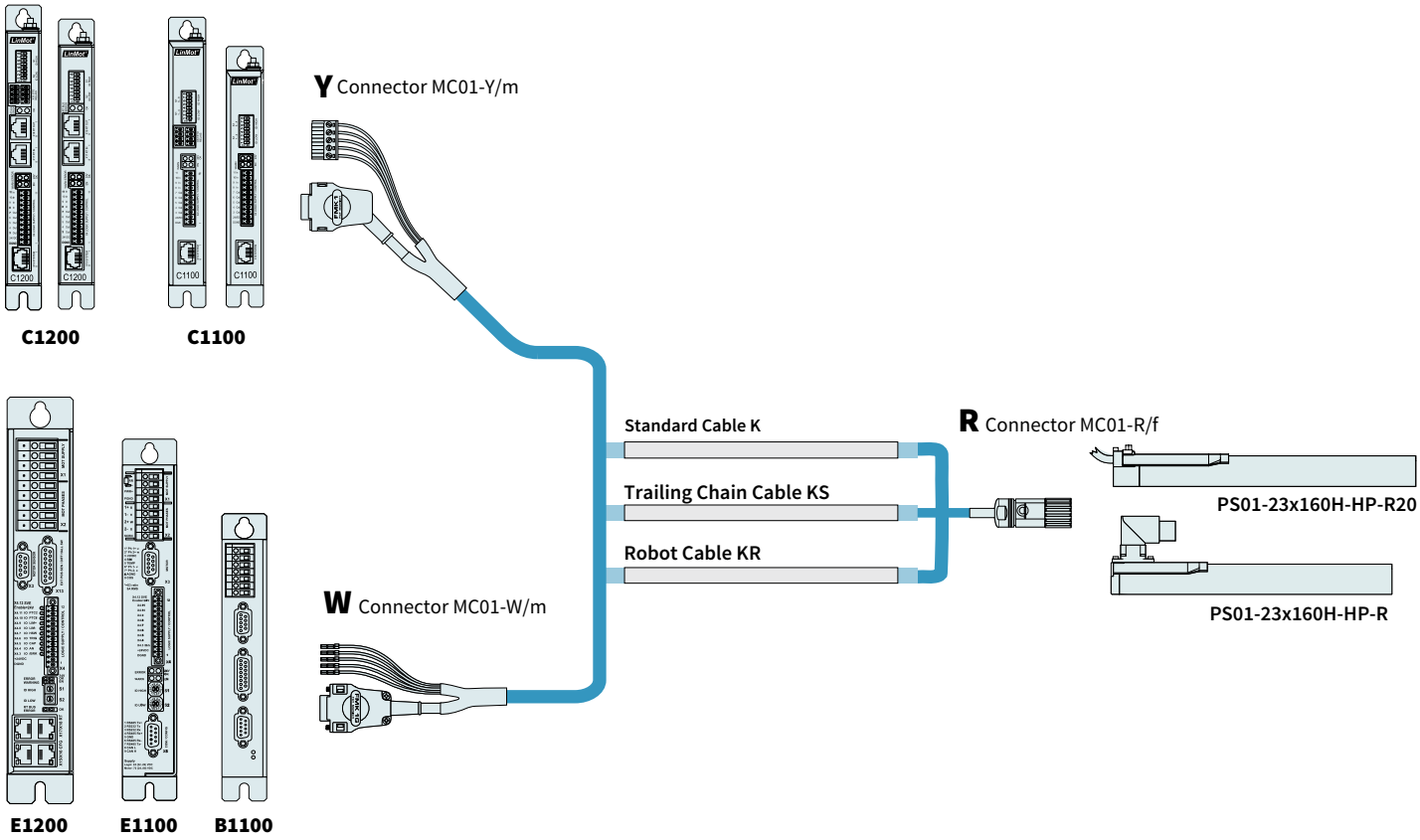

ORDERING INFORMATION

STANDARD CABLE		
Item	**Description**	**Item-No.**
K05-W/R-2	Motor Cable W/R, 2 m	0150-2119
K05-W/R-4	Motor Cable W/R, 4 m	0150-2120
K05-W/R-6	Motor Cable W/R, 6 m	0150-2121
K05-W/R-8	Motor Cable W/R, 8 m	0150-2122
K05-W/R-	Motor Cable W/R, Custom length	0150-3262
K05-Y/R-2	Motor Cable Y/R, 2 m	0150-2421
K05-Y/R-4	Motor Cable Y/R, 4 m	0150-2422
K05-Y/R-6	Motor Cable Y/R, 6 m	0150-2423
K05-Y/R-8	Motor Cable Y/R, 8 m	0150-2424
K05-Y-Fe/R-	Motor Cable Y/R, Custom length	0150-3501

TRAILING CHAIN CABLE		
Item	**Description**	**Item-No.**
KS05-W/R-4	Trailing Chain Cable W/R, 4 m	0150-2106
KS05-W/R-6	Trailing Chain Cable W/R, 6 m	0150-2131
KS05-W/R-8	Trailing Chain Cable W/R, 8 m	0150-2107
KS05-W/R-	Trailing Chain Cable W/R, Custom length	0150-3256
KS05-Y/R-4	Trailing Chain Cable Y/R, 4 m	0150-2433
KS05-Y/R-6	Trailing Chain Cable Y/R, 6 m	0150-2434
KS05-Y/R-8	Trailing Chain Cable Y/R, 8 m	0150-2435
KS05-Y/R-	Trailing Chain Cable Y/R, Custom length	0150-3507

ROBOT CABLE		
Item	**Description**	**Item-No.**
KR05-W/R-	Robot Cable KR05-W/R, Custom length	0150-3336
KR05-Y-Fe/R-	Robot Cable KR05-Y-Fe/R, Custom length	0150-3512

CONNECTOR & CABLE (INDIVIDUAL)		
Item	**Description**	**Item-No.**
MC01-W/m	Motor Connector W/m	0150-3140
MC01-Y-Fe/m	Motor Connector Y-Fe/m	0150-3289
MC01-R/f	Motor Connector R/f	0150-3129
MC01-D/f	Motor Connector D/f	0150-3025
K05-04/05	Motor Cable per m	0150-1920
KS05-04/05	Trailing Chain Cable per m	0150-1938
KR05-04/05	Robot Cable per m	0150-1846

MOTOR FLANGES



Item	Description	Item-No.
PF02-23x120	Flange 23x120 mm	0150-2103
PF02-23x170	Flange 23x170 mm	0150-2117

FIND MORE PRODUCT DETAILS IN THE CHAPTER "ACCESSORIES".

FANS



Item	Description	Item-No.
HV01-23	Fan cooling for H01-23 and PF02-23	0150-5050

FIND MORE PRODUCT DETAILS IN THE CHAPTER "ACCESSORIES".

SLIDER MOUNTING





Item	Description	Item-No.
PLF01-12	Fixed End Washer Set for 12 mm sliders	0150-3085
PLF01-12-Ni	Fixed End Washer Set for 12 mm sliders nickel-plated	0150-3573
PLL02-12	Floating support for PL01-12 Sliders	0150-3111

FIND MORE PRODUCT DETAILS IN THE CHAPTER "ACCESSORIES".

WIPERS



Item	Description	Item-No.
PA01-23/12-F	Wiper front side for PS01-23x...	0150-3125

FIND MORE PRODUCT DETAILS IN THE CHAPTER "ACCESSORIES".

EXTERNAL POSITION SENSORS



Item	Description	Item-No.
MS01-1/D	Linear Encoder 1µm, A/B (for incremental strip)	0150-1840
MB01-1000	Magnetic incremental strip for MS01-1/D, per cm	0150-1963
KS025-D/D-Encoder	Encoder Cable (Length in m)	0150-3166
KS025-D/D15-Encoder	Encoder Cable (Length in m)	0150-3168

FIND MORE PRODUCT DETAILS IN THE CHAPTER "ACCESSORIES".



Item	Description	Item-No.
MS01-1/D-SSI	Linear Encoder 1µm, A/B (for absolute strip)	0150-2095
MB01-1000-ABS	Magnetic absolute strip for MS01-1/D-SSI (per cm)	0150-2096
EC01-ABS/ENC-12-S	MS01-1/D-SSI Encoder connector straight	0150-3616
KSS01-12-D15/ABS-ENC	Special cable for MS01-1/D-SSI on C1100/C1200/C1400/E1200/E1400 Drives	0150-3652

FIND MORE PRODUCT DETAILS IN THE CHAPTER "ACCESSORIES".

LINEAR MOTORS P01-37Sx60-HP



- Short design
- Integrated mounting flange
- Integrated mounting flange
- Free positionable cable outlet
- For use where space is limited and in multi-axis applications

LINEAR MOTORS P01-37Sx60-HP

Technical Data ____ **175**

Motor Specifications

P01-37Sx60/20x40-HP **179**

P01-37Sx60/60x80-HP **180**

P01-37Sx60/100x120-HP **181**

P01-37Sx60/160x180-HP **182**

P01-37Sx60/220x240-HP **183**

P01-37Sx60/260x280-HP **184**

P01-37Sx60/360x380-HP **185**

P01-37Sx60/460x480-HP **186**

P01-37Sx60/560x580-HP **187**

P01-37Sx60/660x680-HP **188**

P01-37Sx60/760x780-HP **189**

P01-37Sx60/860x880-HP **190**

P01-37Sx60/1060x1080-HP **191**

P01-37Sx60/1260x1280-HP **192**

P01-37Sx60/1460x1480-HP **193**

Accessories ____ **194**

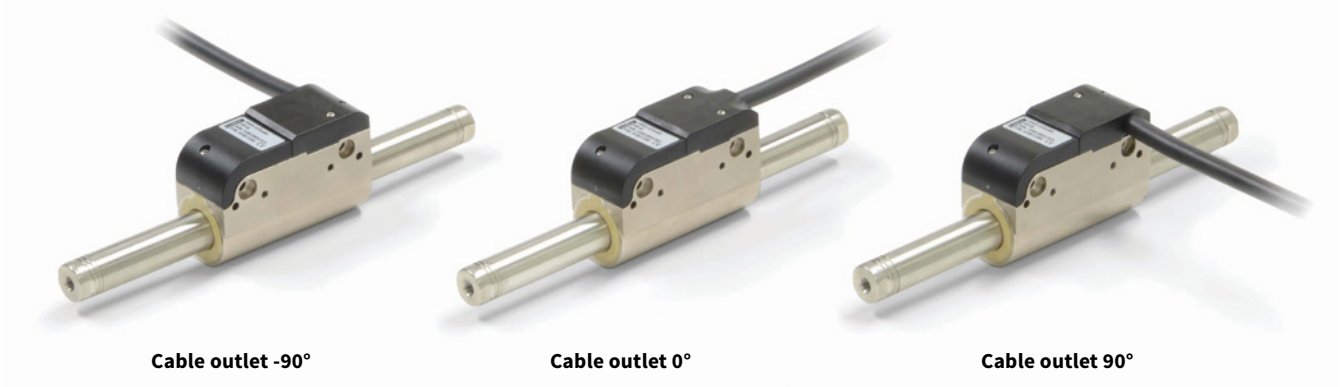

Cable outlet -90° | Cable outlet 0° | Cable outlet 90°

MOTOR FAMILY P01-37Sx60-HP

Technical Data				
Stroke				
Standard Stroke (SS)	mm	(in)	≤ 1460	(≤ 57.5)
Extended Stroke (ES)	mm	(in)	≤ 1480	(≤ 58.3)
Force				
Max. Force @ 48VDC	N	(lbf)	128	(28.7)
Max. Force @ 72VDC	N	(lbf)	128	(28.7)
Max. Cont. Force [Passive cooling/ Fan / Fluid]	N	(lbf)	16 / 33 / -	(3.7 / 7.3 / -)
Max. Border Force relative	%		≤ 83	
Force Constant	N/A_{pk}	(lbf/A_{pk})	13.4	(3.02)
Velocity				
Max. Velocity @ 48VDC	m/s	(in/s)	3.2	(129.9)
Max. Velocity @ 72VDC	m/s	(in/s)	4.9	(189.9)
Position Detection				
Position Resolution	mm	(in)	0.005	(0.0002)
Repeatability	mm	(in)	±0.05	(±0.002)
Position Resolution with ES	mm	(in)	0.001	(0.00004)
Repeatability with ES	mm	(in)	±0.01	(±0.0004)
Linearity with ES	mm	(in)	±0.01	(±0.0004)
Electrical Data				
Max. Current @ 48VDC	A_{pk}		9.4	
Max. Current @ 72VDC	A_{pk}		9.4	
Max. Cont. Current [Passive cooling /Fan / Fluid]	A_{pk}		1.2 / 2.4 / -	
Terminal Resistance 25 °C / 120 °C	Ohm		3.2 / 4.7	
Terminal Inductivity	mH		1.6	
Magnetic Period	mm	(in)	40	(1.57)
Thermal Data				
Max. Winding Temperature (Sensor)	°C		120	
Thermal Resistance [Passive cooling / Fan / Fluid]	°K/W		12 / 3 / -	
Thermal Time Constant [Passive cooling / Fan / Fluid]	s		2400 / 600 / -	
Mechanical Data				
Stator Diameter	mm	(in)	37	(1.5)
Stator Length [Connector type / Cable type]	mm	(in)	90	(3.5)
Stator Mass	g	(lb)	520	(1.14)
Slider Diameter	mm	(in)	20	(0.79)
Slider Length	mm	(in)	160 - 1600	(6.3 - 63)
Slider Mass	g	(lb)	310 - 3620	(0.68 - 7.96)
IP Code			IP 50	

STATOR

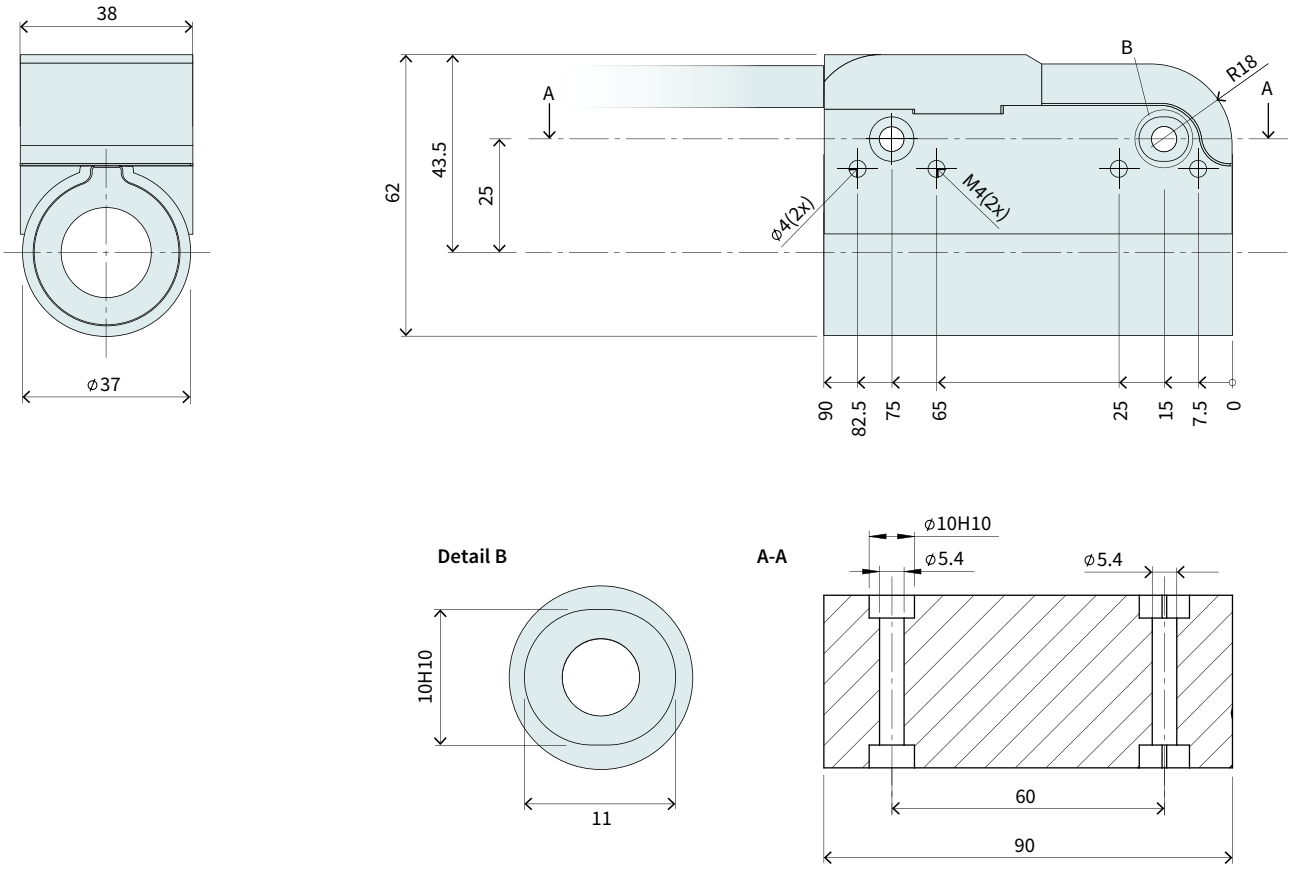

Item	Description	Item-No.
PS01-37Sx60-HP-N	Stator HP, Cable -90°, 0°, +90°	0150-1295

CONNECTOR

Motor Connector Wiring	N-Connector	Wire color motor cable
Phase 1+	Pin 4	red
Phase 1-	Pin 3	pink
Phase 2+	Pin 2	blue
Phase 2-	Pin 1	grey
+5V	Pin A	white
GND	Pin B	Inner Shield
Sensor Sin	Pin C	yellow
Sensor Cos	Pin D	green
Temp Sensor	Pin E	black
Housing		Outer Shield

N-Connector

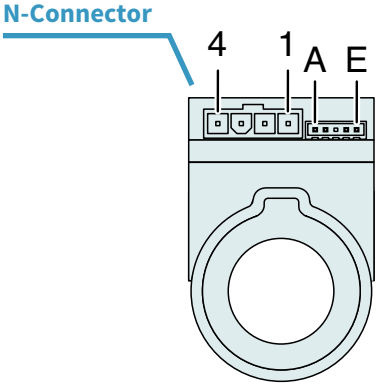

View: Motor Connector, plug side

SLIDER

Slider HP / Heavy Duty HP

Number of grooves determines the slider type
(see chapter 2 / slider) and marks the front end.

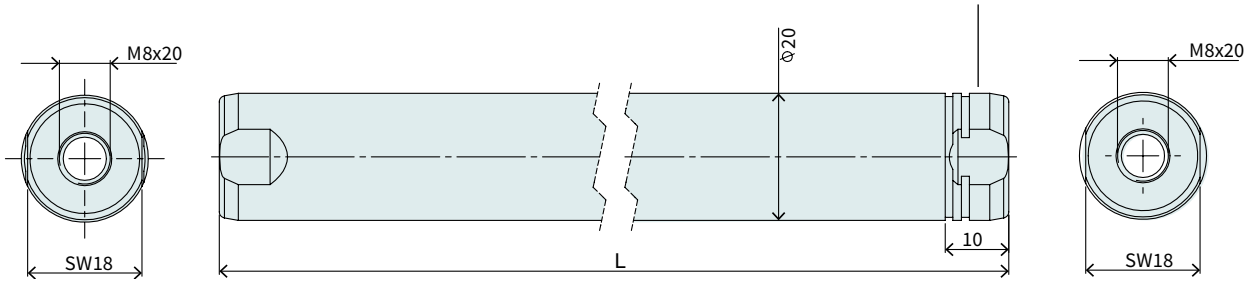

Hollow slider HP

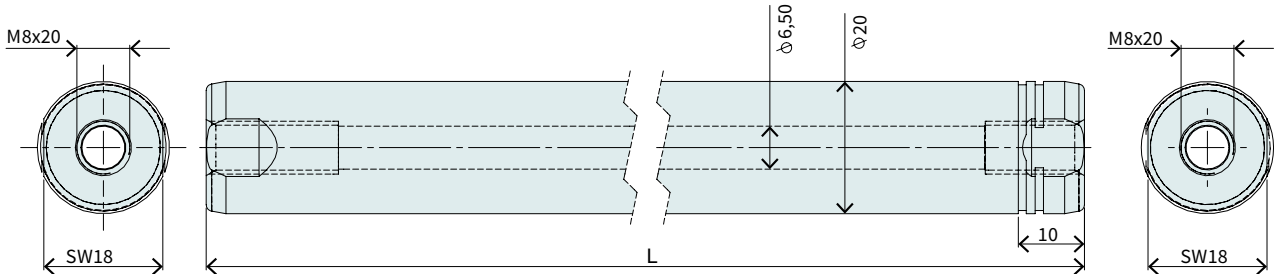

High-Clearance Slider

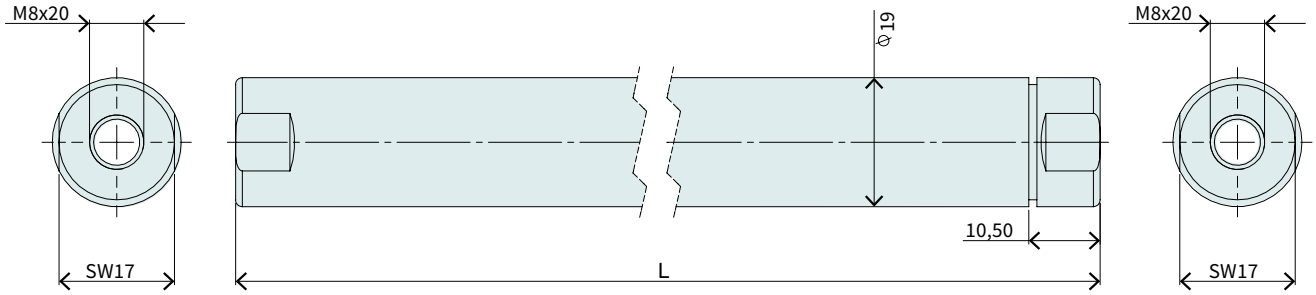

Slider High Performance				
Item	Description	Max. Stroke [mm]	Standard Stroke [mm]	Item-No.
PL01-20x160/100-HP	Slider 'High Performance'	40	20	0150-2513
PL01-20x200/140-HP	Slider 'High Performance'	80	60	0150-2512
PL01-20x240/180-HP	Slider 'High Performance'	120	100	0150-1505
PL01-20x300/240-HP	Slider 'High Performance'	180	160	0150-1506
PL01-20x360/300-HP	Slider 'High Performance'	240	220	0150-1507
PL01-20x400/340-HP	Slider 'High Performance'	280	260	0150-1508
PL01-20x500/440-HP	Slider 'High Performance'	380	360	0150-1509
PL01-20x600/540-HP	Slider 'High Performance'	480	460	0150-1510
PL01-20x700/640-HP	Slider 'High Performance'	580	560	0150-1511
PL01-20x800/740-HP	Slider 'High Performance'	680	660	0150-1512
PL01-20x900/840-HP	Slider 'High Performance'	780	760	0150-1513
PL01-20x1000/940-HP	Slider 'High Performance'	880	860	0150-1514
PL01-20x1200/1140-HP	Slider 'High Performance'	1080	1060	0150-1515
PL01-20x1400/1340-HP	Slider 'High Performance'	1280	1260	0150-1516
PL01-20x1600/1540-HP	Slider 'High Performance'	1480	1460	0150-1517

Slider Heavy Duty High Performance				
Item	Description	Max. Stroke [mm]	Standard Stroke [mm]	Item-No.
PL02-20x160/100-HP	Slider 'heavy duty' 'High Performance	40	20	on request
PL02-20x200/140-HP	Slider 'heavy duty' 'High Performance	80	60	on request
PL02-20x240/180-HP	Slider 'heavy duty' 'High Performance	120	100	0150-2162
PL02-20x300/240-HP	Slider 'heavy duty' 'High Performance	180	160	0150-2163
PL02-20x360/300-HP	Slider 'heavy duty' 'High Performance	240	220	0150-2164
PL02-20x400/340-HP	Slider 'heavy duty' 'High Performance	280	260	0150-2165
PL02-20x500/440-HP	Slider 'heavy duty' 'High Performance	380	360	0150-2166
PL02-20x600/540-HP	Slider 'heavy duty' 'High Performance	480	460	0150-2167
PL02-20x700/640-HP	Slider 'heavy duty' 'High Performance	580	560	0150-2168
PL02-20x800/740-HP	Slider 'heavy duty' 'High Performance	680	660	0150-2169
PL02-20x900/840-HP	Slider 'heavy duty' 'High Performance	780	760	0150-2170

Hollow slider High Performance				
Item	Description	Max. Stroke [mm]	Standard Stroke [mm]	Item-No.
PL01-20x160/100-HP-L	Slider 'High Performance L'	40	20	on request
PL01-20x200/140-HP-L	Slider 'High Performance L'	80	60	on request
PL01-20x240/180-HP-L	Slider 'High Performance L'	120	100	0150-2540
PL01-20x300/240-HP-L	Slider 'High Performance L'	180	160	0150-3696
PL01-20x360/300-HP-L	Slider 'High Performance L'	240	220	0150-1537
PL01-20x400/340-HP-L	Slider 'High Performance L'	280	260	0150-3697
PL01-20x500/440-HP-L	Slider 'High Performance L'	380	360	0150-3698
PL01-20x600/540-HP-L	Slider 'High Performance L'	480	460	0150-3699
PL01-20x700/640-HP-L	Slider 'High Performance L'	580	560	0150-3700
PL01-20x800/740-HP-L	Slider 'High Performance L'	680	660	0150-3701
PL01-20x900/840-HP-L	Slider 'High Performance L'	780	760	0150-3702
PL01-20x1000/940-HP-L	Slider 'High Performance L'	880	860	0150-3703
PL01-20x1200/1140-HP-L	Slider 'High Performance L'	1080	1060	0150-2510
PL01-20x1400/1340-HP-L	Slider 'High Performance L'	1280	1260	on request
PL01-20x1600/1540-HP-L	Slider 'High Performance L'	1480	1460	on request

High-Clearance Slider				
Item	Description	Max. Stroke [mm]	Standard Stroke [mm]	Item-No.
PL01-19x160/100	Slider 'high clearance'	40	20	on request
PL01-19x200/140	Slider 'high clearance'	80	60	on request
PL01-19x240/160	Slider 'high clearance'	100	80	0150-1448
PL01-19x300/220	Slider 'high clearance'	160	140	0150-1449
PL01-19x395/320	Slider 'high clearance'	360	340	0150-1452
PL01-19x500/420	Slider 'high clearance'	460	440	0150-1455
PL01-19x600/520	Slider 'high clearance'	560	540	0150-1456

P01-37Sx60/20x40-HP

Max. Stroke: 40 mm
Peak Force: 128 N

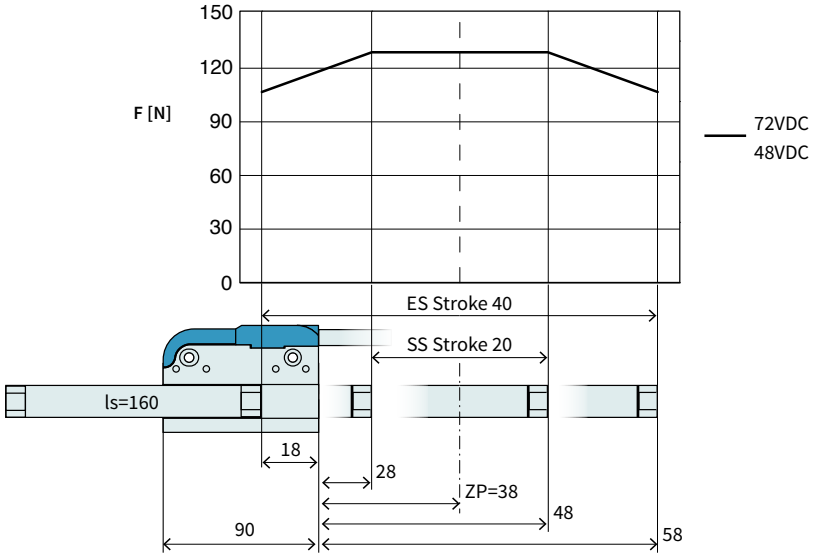

Dimensions in mm

Technical Data P01-37Sx60/20x40-HP				
Stroke				
Standard Stroke (SS)	mm	(in)	20	(0.78)
Extended Stroke (ES)	mm	(in)	40	(1.57)
Force				
Max. Force @ 48VDC	N	(lbf)	128	(28.7)
Max. Force @ 72VDC	N	(lbf)	128	(28.7)
Max. Cont. Force [Passive cooling/ Fan / Fluid]	N	(lbf)	16 / 33 / -	(3.7 / 7.3 / -)
Max. Border Force relative	%		83	
Force Constant	N/A_{pk}	(lbf/A_{pk})	13.4	(3.02)
Velocity				
Max. Velocity @ 48VDC	m/s	(in/s)	3.2	(129.9)
Max. Velocity @ 72VDC	m/s	(in/s)	4.9	(189.9)
Position Detection				
Repeatability	mm	(in)	±0.05	(±0.002)
Linearity	%		± 1.35	
Electrical Data				
Max. Current @ 48VDC	A_{pk}		9.4	
Max. Current @ 72VDC	A_{pk}		9.4	
Max. Cont. Current [Passive cooling /Fan / Fluid]	A_{pk}		1.2 / 2.4 / -	
Thermal Data				
Max. Winding Temperature (Sensor)	°C		120	
Thermal Resistance [Passive cooling / Fan / Fluid]	°K/W		12 / 3 / -	
Thermal Time Constant [Passive cooling / Fan / Fluid]	s		2400 / 600 / -	
Mechanical Data				
Slider Length	mm	(in)	160	(6.3)
Slider Mass	g	(lb)	310	(0.68)

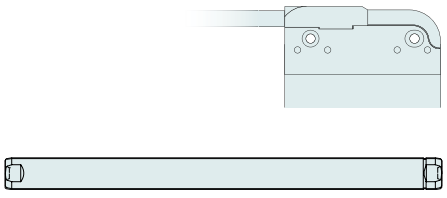

Item	Description	Item-No.
PS01-37Sx60-HP-N	Stator HP, Cable -90°, 0°, +90°	0150-1295

PL01-20x160/100-HP	Slider 'High Performance'	0150-2513
PL02-20x160/100-HP	Slider 'heavy duty' 'High Performance	on request
PL01-20x160/100-HP-L*	Slider 'High Performance L'	on request
PL01-19x160/100*	Slider 'high clearance'	on request

* With this slider, the motor specifications above change.

P01-37Sx60/60x80-HP

Max. Stroke: 80 mm
Peak Force: 128 N

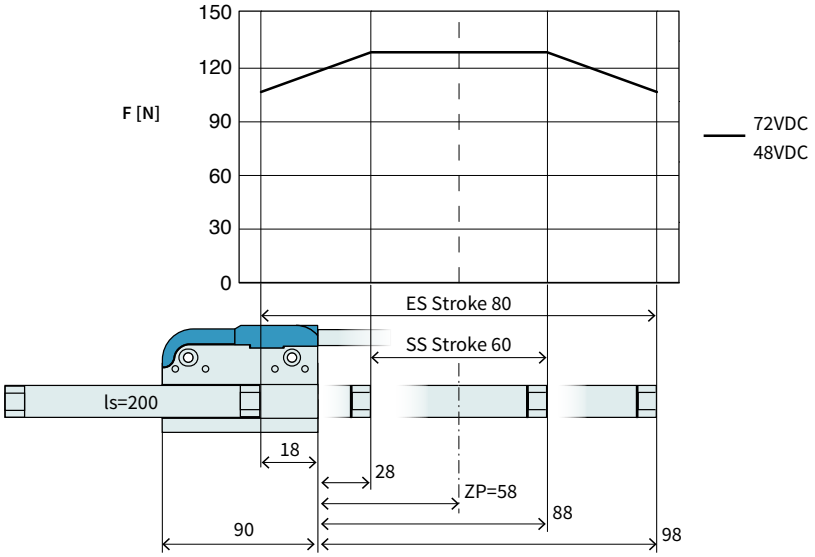

Dimensions in mm

Technical Data P01-37Sx60/60x80-HP				
Stroke				
Standard Stroke (SS)	mm	(in)	60	(2.35)
Extended Stroke (ES)	mm	(in)	80	(3.14)
Force				
Max. Force @ 48VDC	N	(lbf)	128	(28.7)
Max. Force @ 72VDC	N	(lbf)	128	(28.7)
Max. Cont. Force [Passive cooling/ Fan / Fluid]	N	(lbf)	16 / 33 / -	(3.7 / 7.3 / -)
Max. Border Force relative	%		83	
Force Constant	N/A_{pk}	(lbf/A_{pk})	13.4	(3.02)
Velocity				
Max. Velocity @ 48VDC	m/s	(in/s)	3.2	(129.9)
Max. Velocity @ 72VDC	m/s	(in/s)	4.9	(189.9)
Position Detection				
Repeatability	mm	(in)	±0.05	(±0.002)
Linearity	%		± 0.7	
Electrical Data				
Max. Current @ 48VDC	A_{pk}		9.4	
Max. Current @ 72VDC	A_{pk}		9.4	
Max. Cont. Current [Passive cooling /Fan / Fluid]	A_{pk}		1.2 / 2.4 / -	
Thermal Data				
Max. Winding Temperature (Sensor)	°C		120	
Thermal Resistance [Passive cooling / Fan / Fluid]	°K/W		12 / 3 / -	
Thermal Time Constant [Passive cooling / Fan / Fluid]	s		2400 / 600 / -	
Mechanical Data				
Slider Length	mm	(in)	200	(7.9)
Slider Mass	g	(lb)	400	(0.88)

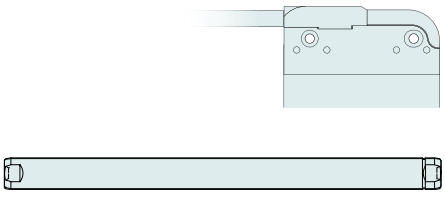

Item	Description	Item-No.
PS01-37Sx60-HP-N	Stator HP, Cable -90°, 0°, +90°	0150-1295

PL01-20x200/140-HP	Slider 'High Performance'	0150-2512
PL02-20x200/140-HP	Slider 'heavy duty' 'High Performance	on request
PL01-20x200/140-HP-L*	Slider 'High Performance L'	on request
PL01-19x200/140*	Slider 'high clearance'	on request

* With this slider, the motor specifications above change.

P01-37Sx60/100x120-HP

Max. Stroke: 120 mm
Peak Force: 128 N

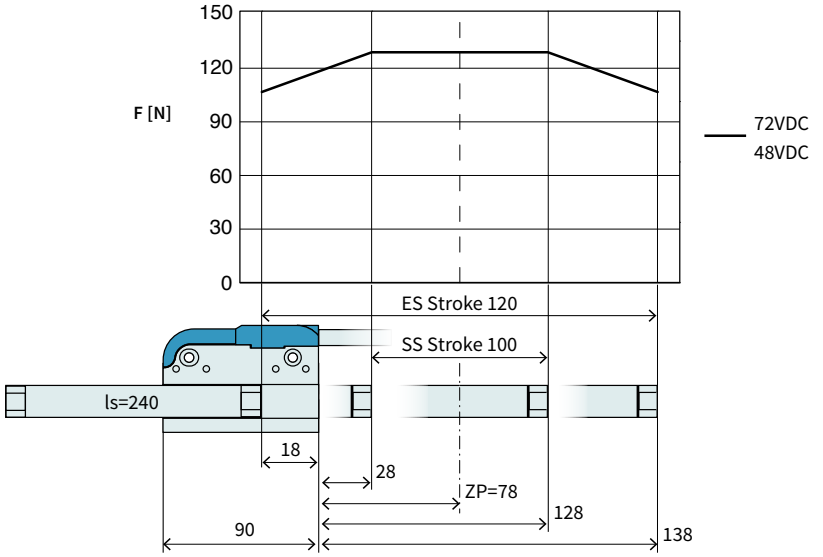

Dimensions in mm

Technical Data P01-37Sx60/100x120-HP				
Stroke				
Standard Stroke (SS)	mm	(in)	100	(3.93)
Extended Stroke (ES)	mm	(in)	120	(4.71)
Force				
Max. Force @ 48VDC	N	(lbf)	128	(28.7)
Max. Force @ 72VDC	N	(lbf)	128	(28.7)
Max. Cont. Force [Passive cooling/ Fan / Fluid]	N	(lbf)	16 / 33 / -	(3.7 / 7.3 / -)
Max. Border Force relative	%		83	
Force Constant	N/A_{pk}	(lbf/A_{pk})	13.4	(3.02)
Velocity				
Max. Velocity @ 48VDC	m/s	(in/s)	3.2	(129.9)
Max. Velocity @ 72VDC	m/s	(in/s)	4.9	(189.9)
Position Detection				
Repeatability	mm	(in)	±0.05	(±0.002)
Linearity	%		± 0.5	
Electrical Data				
Max. Current @ 48VDC	A_{pk}		9.4	
Max. Current @ 72VDC	A_{pk}		9.4	
Max. Cont. Current [Passive cooling /Fan / Fluid]	A_{pk}		1.2 / 2.4 / -	
Thermal Data				
Max. Winding Temperature (Sensor)	°C		120	
Thermal Resistance [Passive cooling / Fan / Fluid]	°K/W		12 / 3 / -	
Thermal Time Constant [Passive cooling / Fan / Fluid]	s		2400 / 600 / -	
Mechanical Data				
Slider Length	mm	(in)	240	(9.4)
Slider Mass	g	(lb)	490	(1.08)

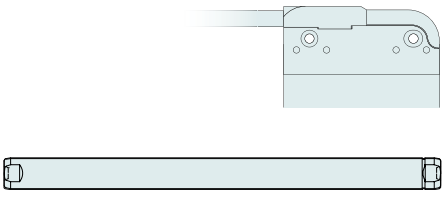

Item	Description	Item-No.
PS01-37Sx60-HP-N	Stator HP, Cable -90°, 0°, +90°	0150-1295

PL01-20x240/180-HP	Slider 'High Performance'	0150-1505
PL02-20x240/180-HP	Slider 'heavy duty' 'High Performance	0150-2162
PL01-20x240/180-HP-L*	Slider 'High Performance L'	0150-2540
PL01-19x240/160*	Slider 'high clearance'	0150-1448

* With this slider, the motor specifications above change.

P01-37Sx60/160x180-HP

Max. Stroke: 180 mm
Peak Force: 128 N

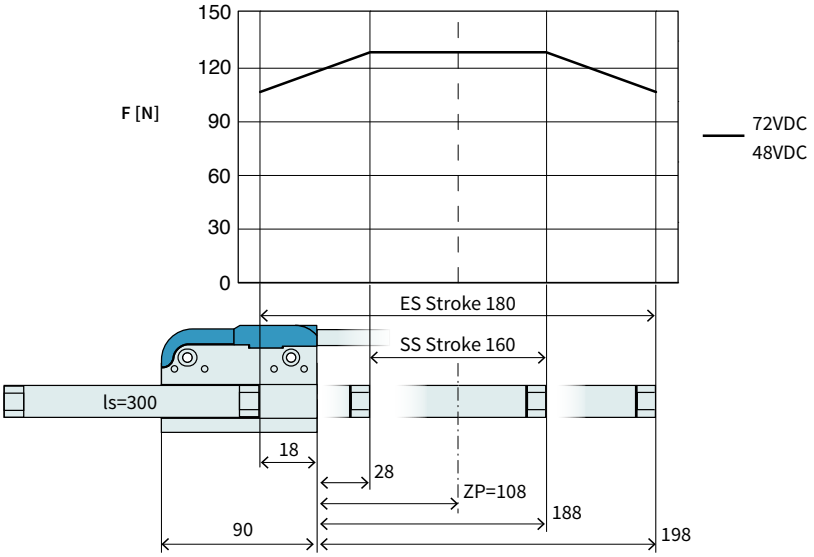

Dimensions in mm

Technical Data P01-37Sx60/160x180-HP				
Stroke				
Standard Stroke (SS)	mm	(in)	160	(6.29)
Extended Stroke (ES)	mm	(in)	180	(7.08)
Force				
Max. Force @ 48VDC	N	(lbf)	128	(28.7)
Max. Force @ 72VDC	N	(lbf)	128	(28.7)
Max. Cont. Force [Passive cooling/ Fan / Fluid]	N	(lbf)	16 / 33 / -	(3.7 / 7.3 / -)
Max. Border Force relative	%		83	
Force Constant	N/A_{pk}	(lbf/A_{pk})	13.4	(3.02)
Velocity				
Max. Velocity @ 48VDC	m/s	(in/s)	3.2	(129.9)
Max. Velocity @ 72VDC	m/s	(in/s)	4.9	(189.9)
Position Detection				
Repeatability	mm	(in)	±0.05	(±0.002)
Linearity	%		± 0.4	
Electrical Data				
Max. Current @ 48VDC	A_{pk}		9.4	
Max. Current @ 72VDC	A_{pk}		9.4	
Max. Cont. Current [Passive cooling /Fan / Fluid]	A_{pk}		1.2 / 2.4 / -	
Thermal Data				
Max. Winding Temperature (Sensor)	°C		120	
Thermal Resistance [Passive cooling / Fan / Fluid]	°K/W		12 / 3 / -	
Thermal Time Constant [Passive cooling / Fan / Fluid]	s		2400 / 600 / -	
Mechanical Data				
Slider Length	mm	(in)	300	(12)
Slider Mass	g	(lb)	630	(1.1)

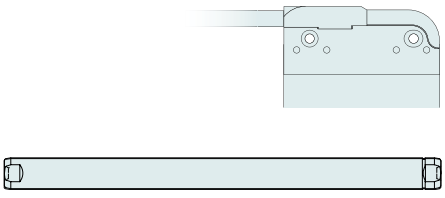

Item	Description	Item-No.
PS01-37Sx60-HP-N	Stator HP, Cable -90°, 0°, +90°	0150-1295

PL01-20x300/240-HP	Slider 'High Performance'	0150-1506
PL02-20x300/240-HP	Slider 'heavy duty' 'High Performance	0150-2163
PL01-20x300/240-HP-L	Slider 'High Performance L'	0150-3696
PL01-19x300/220*	Slider 'high clearance'	0150-1449

* With this slider, the motor specifications above change.

P01-37Sx60/220x240-HP

Max. Stroke: 240 mm
Peak Force: 128 N

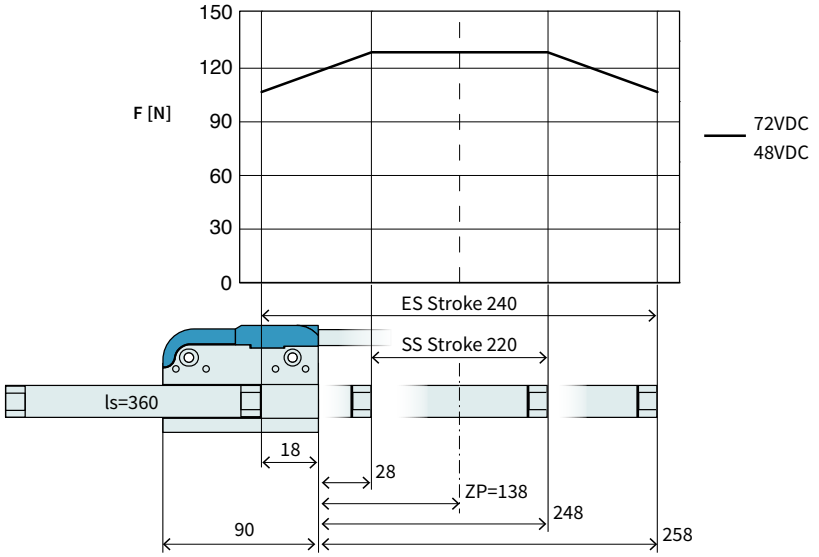

Dimensions in mm

Technical Data P01-37Sx60/220x240-HP				
Stroke				
Standard Stroke (SS)	mm	(in)	220	(8.65)
Extended Stroke (ES)	mm	(in)	240	(9.44)
Force				
Max. Force @ 48VDC	N	(lbf)	128	(28.7)
Max. Force @ 72VDC	N	(lbf)	128	(28.7)
Max. Cont. Force [Passive cooling/ Fan / Fluid]	N	(lbf)	16 / 33 / -	(3.7 / 7.3 / -)
Max. Border Force relative	%		83	
Force Constant	N/A_{pk}	(lbf/A_{pk})	13.4	(3.02)
Velocity				
Max. Velocity @ 48VDC	m/s	(in/s)	3.2	(129.9)
Max. Velocity @ 72VDC	m/s	(in/s)	4.9	(189.9)
Position Detection				
Repeatability	mm	(in)	±0.05	(±0.002)
Linearity	%		± 0.3	
Electrical Data				
Max. Current @ 48VDC	A_{pk}		9.4	
Max. Current @ 72VDC	A_{pk}		9.4	
Max. Cont. Current [Passive cooling /Fan / Fluid]	A_{pk}		1.2 / 2.4 / -	
Thermal Data				
Max. Winding Temperature (Sensor)	°C		120	
Thermal Resistance [Passive cooling / Fan / Fluid]	°K/W		12 / 3 / -	
Thermal Time Constant [Passive cooling / Fan / Fluid]	s		2400 / 600 / -	
Mechanical Data				
Slider Length	mm	(in)	360	(14)
Slider Mass	g	(lb)	760	(1.67)

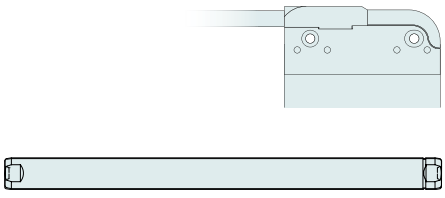

Item	Description	Item-No.
PS01-37Sx60-HP-N	Stator HP, Cable -90°, 0°, +90°	0150-1295

PL01-20x360/300-HP	Slider 'High Performance'	0150-1507
PL02-20x360/300-HP	Slider 'heavy duty' 'High Performance	0150-2164
PL01-20x360/300-HP-L*	Slider 'High Performance L'	0150-1537

* With this slider, the motor specifications above change.

P01-37Sx60/260x280-HP

Max. Stroke: 280 mm
Peak Force: 128 N

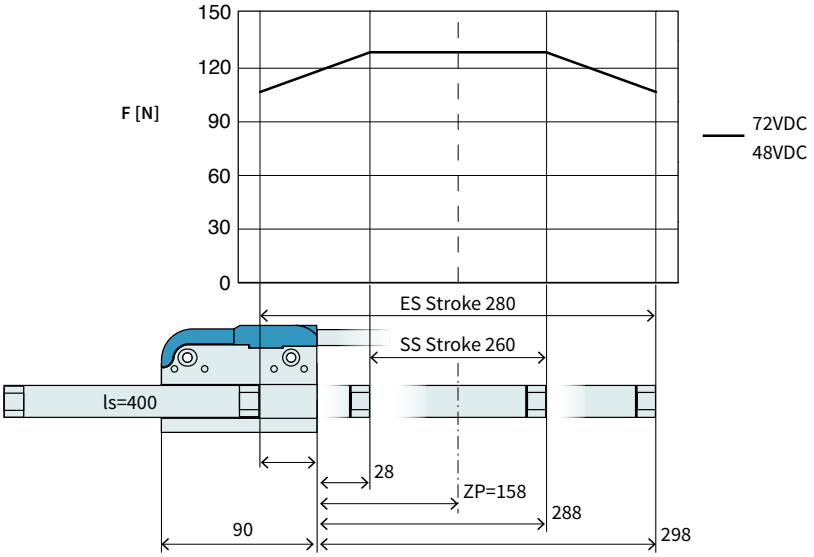

Dimensions in mm

Technical Data P01-37Sx60/260x280-HP				
Stroke				
Standard Stroke (SS)	mm	(in)	260	(10.19)
Extended Stroke (ES)	mm	(in)	280	(10.99)
Force				
Max. Force @ 48VDC	N	(lbf)	128	(28.7)
Max. Force @ 72VDC	N	(lbf)	128	(28.7)
Max. Cont. Force [Passive cooling/ Fan / Fluid]	N	(lbf)	16 / 33 / -	(3.7 / 7.3 / -)
Max. Border Force relative	%		83	
Force Constant	N/A_{pk}	(lbf/A_{pk})	13.4	(3.02)
Velocity				
Max. Velocity @ 48VDC	m/s	(in/s)	3.2	(129.9)
Max. Velocity @ 72VDC	m/s	(in/s)	4.9	(189.9)
Position Detection				
Repeatability	mm	(in)	±0.05	(±0.002)
Linearity	%		± 0.3	
Electrical Data				
Max. Current @ 48VDC	A_{pk}		9.4	
Max. Current @ 72VDC	A_{pk}		9.4	
Max. Cont. Current [Passive cooling /Fan / Fluid]	A_{pk}		1.2 / 2.4 / -	
Thermal Data				
Max. Winding Temperature (Sensor)	°C		120	
Thermal Resistance [Passive cooling / Fan / Fluid]	°K/W		12 / 3 / -	
Thermal Time Constant [Passive cooling / Fan / Fluid]	s		2400 / 600 / -	
Mechanical Data				
Slider Length	mm	(in)	400	(16)
Slider Mass	g	(lb)	860	(1.89)

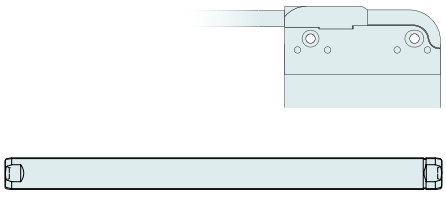

Item	Description	Item-No.
PS01-37Sx60-HP-N	Stator HP, Cable -90°, 0°, +90°	0150-1295

PL01-20x400/340-HP	Slider 'High Performance'	0150-1508
PL02-20x400/340-HP	Slider 'heavy duty' 'High Performance	0150-2165
PL01-20x400/340-HP-L*	Slider 'High Performance L'	0150-3697
PL01-19x395/320*	Slider 'high clearance'	0150-1452

* With this slider, the motor specifications above change.

P01-37Sx60/360x380-HP

Max. Stroke: 380 mm
Peak Force: 128 N

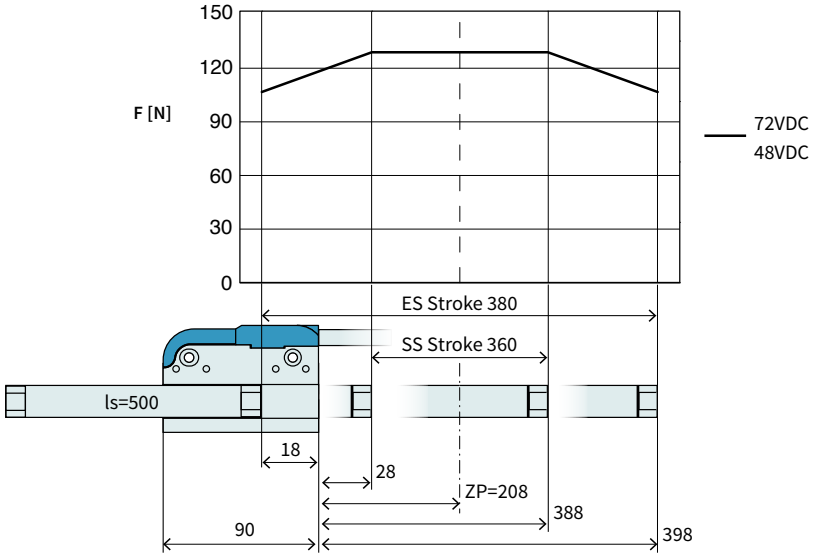

Dimensions in mm

Technical Data P01-37Sx60/360x380-HP				
Stroke				
Standard Stroke (SS)	mm	(in)	360	(14.19)
Extended Stroke (ES)	mm	(in)	380	(14.99)
Force				
Max. Force @ 48VDC	N	(lbf)	128	(28.7)
Max. Force @ 72VDC	N	(lbf)	128	(28.7)
Max. Cont. Force [Passive cooling/ Fan / Fluid]	N	(lbf)	16 / 33 / -	(3.7 / 7.3 / -)
Max. Border Force relative	%		83	
Force Constant	N/A_{pk}	(lbf/A_{pk})	13.4	(3.02)
Velocity				
Max. Velocity @ 48VDC	m/s	(in/s)	3.2	(129.9)
Max. Velocity @ 72VDC	m/s	(in/s)	4.9	(189.9)
Position Detection				
Repeatability	mm	(in)	±0.05	(±0.002)
Linearity	%		± 0.25	
Electrical Data				
Max. Current @ 48VDC	A_{pk}		9.4	
Max. Current @ 72VDC	A_{pk}		9.4	
Max. Cont. Current [Passive cooling /Fan / Fluid]	A_{pk}		1.2 / 2.4 / -	
Thermal Data				
Max. Winding Temperature (Sensor)	°C		120	
Thermal Resistance [Passive cooling / Fan / Fluid]	°K/W		12 / 3 / -	
Thermal Time Constant [Passive cooling / Fan / Fluid]	s		2400 / 600 / -	
Mechanical Data				
Slider Length	mm	(in)	500	(20)
Slider Mass	g	(lb)	1090	(2.4)

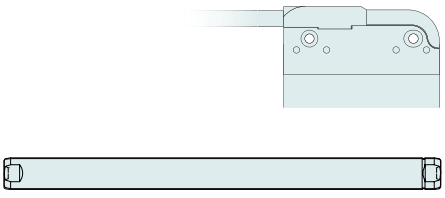

Item	Description	Item-No.
PS01-37Sx60-HP-N	Stator HP, Cable -90°, 0°, +90°	0150-1295

PL01-20x500/440-HP	Slider 'High Performance'	0150-1509
PL02-20x500/440-HP	Slider 'heavy duty' 'High Performance	0150-2166
PL01-20x500/440-HP-L*	Slider 'High Performance L'	0150-3698
PL01-19x500/420*	Slider 'high clearance'	0150-1455

* With this slider, the motor specifications above change.

P01-37Sx60/460x480-HP

Max. Stroke: 480 mm
Peak Force: 128 N

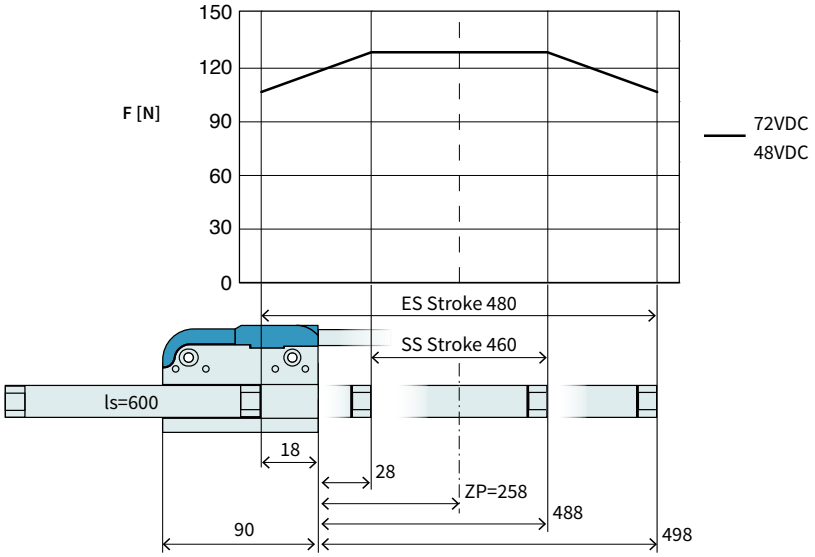

Dimensions in mm

Technical Data P01-37Sx60/460x480-HP				
Stroke				
Standard Stroke (SS)	mm	(in)	460	(18.1)
Extended Stroke (ES)	mm	(in)	480	(18.89)
Force				
Max. Force @ 48VDC	N	(lbf)	128	(28.7)
Max. Force @ 72VDC	N	(lbf)	128	(28.7)
Max. Cont. Force [Passive cooling/ Fan / Fluid]	N	(lbf)	16 / 33 / -	(3.7 / 7.3 / -)
Max. Border Force relative	%		83	
Force Constant	N/A_{pk}	(lbf/A_{pk})	13.4	(3.02)
Velocity				
Max. Velocity @ 48VDC	m/s	(in/s)	3.2	(129.9)
Max. Velocity @ 72VDC	m/s	(in/s)	4.9	(189.9)
Position Detection				
Repeatability	mm	(in)	±0.05	(±0.002)
Linearity	%		± 0.2	
Electrical Data				
Max. Current @ 48VDC	A_{pk}		9.4	
Max. Current @ 72VDC	A_{pk}		9.4	
Max. Cont. Current [Passive cooling /Fan / Fluid]	A_{pk}		1.2 / 2.4 / -	
Thermal Data				
Max. Winding Temperature (Sensor)	°C		120	
Thermal Resistance [Passive cooling / Fan / Fluid]	°K/W		12 / 3 / -	
Thermal Time Constant [Passive cooling / Fan / Fluid]	s		2400 / 600 / -	
Mechanical Data				
Slider Length	mm	(in)	600	(24)
Slider Mass	g	(lb)	1330	(2.93)

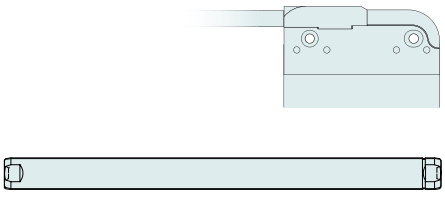

Item	Description	Item-No.
PS01-37Sx60-HP-N	Stator HP, Cable -90°, 0°, +90°	0150-1295

PL01-20x600/540-HP	Slider 'High Performance'	0150-1510
PL02-20x600/540-HP	Slider 'heavy duty' 'High Performance	0150-2167
PL01-20x600/540-HP-L*	Slider 'High Performance L'	0150-3699
PL01-19x600/520*	Slider 'high clearance'	0150-1456

* With this slider, the motor specifications above change.

P01-37Sx60/560x580-HP

Max. Stroke: 580 mm
Peak Force: 128 N

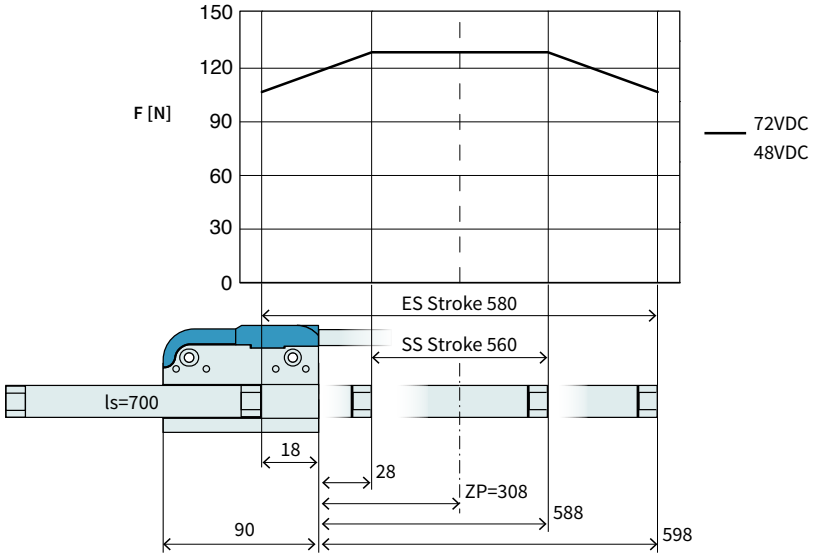

Dimensions in mm

Technical Data P01-37Sx60/560x580-HP				
Stroke				
Standard Stroke (SS)	mm	(in)	560	(21.99)
Extended Stroke (ES)	mm	(in)	580	(22.8)
Force				
Max. Force @ 48VDC	N	(lbf)	128	(28.7)
Max. Force @ 72VDC	N	(lbf)	128	(28.7)
Max. Cont. Force [Passive cooling/ Fan / Fluid]	N	(lbf)	16 / 33 / -	(3.7 / 7.3 / -)
Max. Border Force relative	%		83	
Force Constant	N/A_{pk}	(lbf/A_{pk})	13.4	(3.02)
Velocity				
Max. Velocity @ 48VDC	m/s	(in/s)	3.2	(129.9)
Max. Velocity @ 72VDC	m/s	(in/s)	4.9	(189.9)
Position Detection				
Repeatability	mm	(in)	±0.05	(±0.002)
Linearity	%		± 0.2	
Electrical Data				
Max. Current @ 48VDC	A_{pk}		9.4	
Max. Current @ 72VDC	A_{pk}		9.4	
Max. Cont. Current [Passive cooling /Fan / Fluid]	A_{pk}		1.2 / 2.4 / -	
Thermal Data				
Max. Winding Temperature (Sensor)	°C		120	
Thermal Resistance [Passive cooling / Fan / Fluid]	°K/W		12 / 3 / -	
Thermal Time Constant [Passive cooling / Fan / Fluid]	s		2400 / 600 / -	
Mechanical Data				
Slider Length	mm	(in)	700	(28)
Slider Mass	g	(lb)	1560	(3.43)

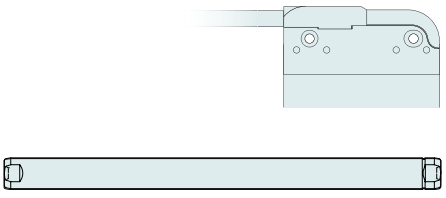

Item	Description	Item-No.
PS01-37Sx60-HP-N	Stator HP, Cable -90°, 0°, +90°	0150-1295

PL01-20x700/640-HP	Slider 'High Performance'	0150-1511
PL02-20x700/640-HP	Slider 'heavy duty' 'High Performance	0150-2168
PL01-20x700/640-HP-L*	Slider 'High Performance L'	0150-3700
PL01-19x700/620*	Slider 'high clearance'	0150-1457

* With this slider, the motor specifications above change.

P01-37Sx60/660x680-HP

Max. Stroke: 680 mm
Peak Force: 128 N

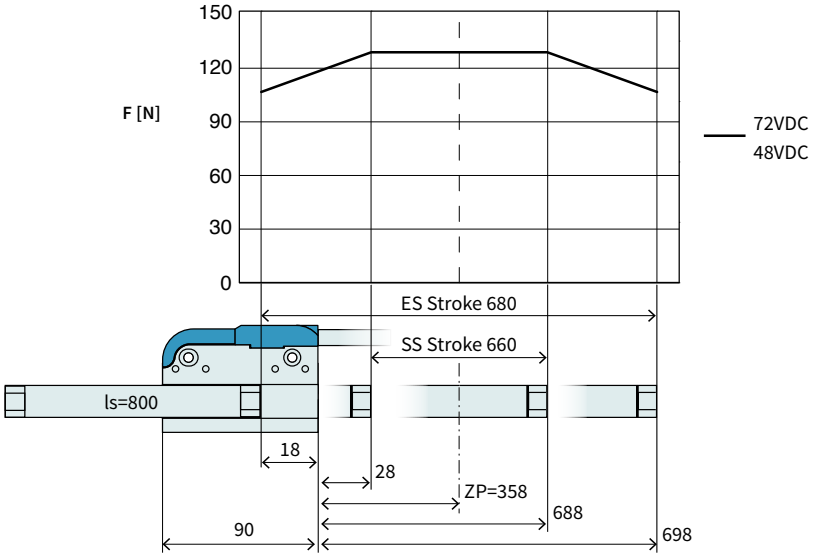

Dimensions in mm

Technical Data P01-37Sx60/660x680-HP				
Stroke				
Standard Stroke (SS)	mm	(in)	660	(25.99)
Extended Stroke (ES)	mm	(in)	680	(26.8)
Force				
Max. Force @ 48VDC	N	(lbf)	128	(28.7)
Max. Force @ 72VDC	N	(lbf)	128	(28.7)
Max. Cont. Force [Passive cooling/ Fan / Fluid]	N	(lbf)	16 / 33 / -	(3.7 / 7.3 / -)
Max. Border Force relative	%		83	
Force Constant	N/A_{pk}	(lbf/A_{pk})	13.4	(3.02)
Velocity				
Max. Velocity @ 48VDC	m/s	(in/s)	3.2	(129.9)
Max. Velocity @ 72VDC	m/s	(in/s)	4.9	(189.9)
Position Detection				
Repeatability	mm	(in)	±0.05	(±0.002)
Linearity	%		± 0.15	
Electrical Data				
Max. Current @ 48VDC	A_{pk}		9.4	
Max. Current @ 72VDC	A_{pk}		9.4	
Max. Cont. Current [Passive cooling /Fan / Fluid]	A_{pk}		1.2 / 2.4 / -	
Thermal Data				
Max. Winding Temperature (Sensor)	°C		120	
Thermal Resistance [Passive cooling / Fan / Fluid]	°K/W		12 / 3 / -	
Thermal Time Constant [Passive cooling / Fan / Fluid]	s		2400 / 600 / -	
Mechanical Data				
Slider Length	mm	(in)	800	(31)
Slider Mass	g	(lb)	1790	(3.94)

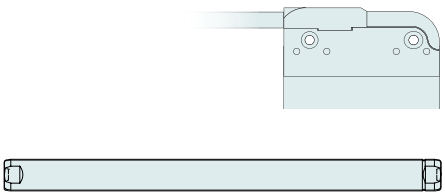

Item	Description	Item-No.
PS01-37Sx60-HP-N	Stator HP, Cable -90°, 0°, +90°	0150-1295
PL01-20x800/740-HP	Slider 'High Performance'	0150-1512
PL02-20x800/740-HP	Slider 'heavy duty' 'High Performance	0150-2169
PL01-20x800/740-HP-L*	Slider 'High Performance L'	0150-3701

* With this slider, the motor specifications above change.

P01-37Sx60/760x780-HP

Max. Stroke: 780 mm
Peak Force: 128 N

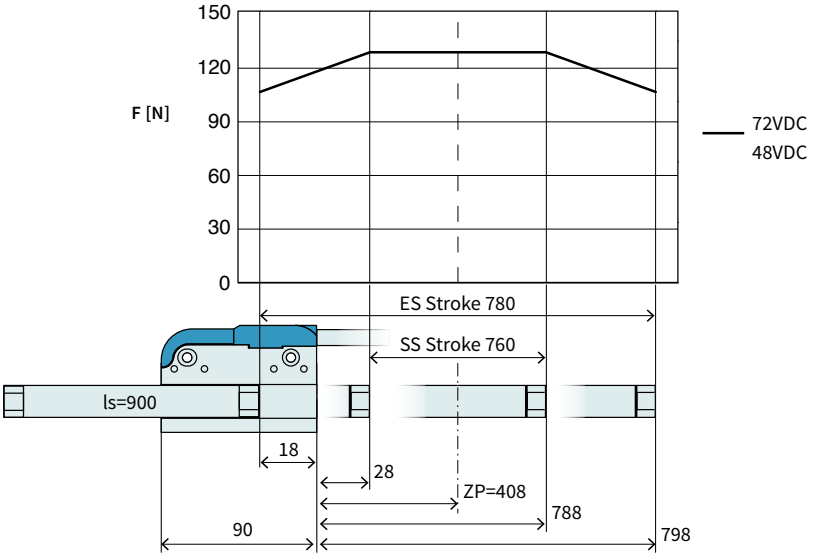

Dimensions in mm

Technical Data P01-37Sx60/760x780-HP				
Stroke				
Standard Stroke (SS)	mm	(in)	760	(29.89)
Extended Stroke (ES)	mm	(in)	780	(30.69)
Force				
Max. Force @ 48VDC	N	(lbf)	128	(28.7)
Max. Force @ 72VDC	N	(lbf)	128	(28.7)
Max. Cont. Force [Passive cooling/ Fan / Fluid]	N	(lbf)	16 / 33 / -	(3.7 / 7.3 / -)
Max. Border Force relative	%		83	
Force Constant	N/A_{pk}	(lbf/A_{pk})	13.4	(3.02)
Velocity				
Max. Velocity @ 48VDC	m/s	(in/s)	3.2	(129.9)
Max. Velocity @ 72VDC	m/s	(in/s)	4.9	(189.9)
Position Detection				
Repeatability	mm	(in)	±0.05	(±0.002)
Linearity	%		± 0.15	
Electrical Data				
Max. Current @ 48VDC	A_{pk}		9.4	
Max. Current @ 72VDC	A_{pk}		9.4	
Max. Cont. Current [Passive cooling /Fan / Fluid]	A_{pk}		1.2 / 2.4 / -	
Thermal Data				
Max. Winding Temperature (Sensor)	°C		120	
Thermal Resistance [Passive cooling / Fan / Fluid]	°K/W		12 / 3 / -	
Thermal Time Constant [Passive cooling / Fan / Fluid]	s		2400 / 600 / -	
Mechanical Data				
Slider Length	mm	(in)	900	(35)
Slider Mass	g	(lb)	2020	(4.44)

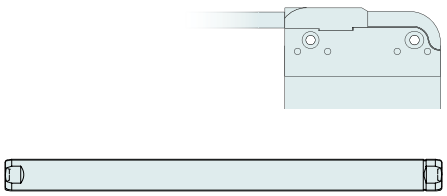

Item	Description	Item-No.
PS01-37Sx60-HP-N	Stator HP, Cable -90°, 0°, +90°	0150-1295

PL01-20x900/840-HP	Slider 'High Performance'	0150-1513
PL02-20x900/840-HP	Slider 'heavy duty' 'High Performance	0150-2170
PL01-20x900/840-HP-L*	Slider 'High Performance L'	0150-3702

* With this slider, the motor specifications above change.

P01-37Sx60/860x880-HP

Max. Stroke: 880 mm
Peak Force: 128 N

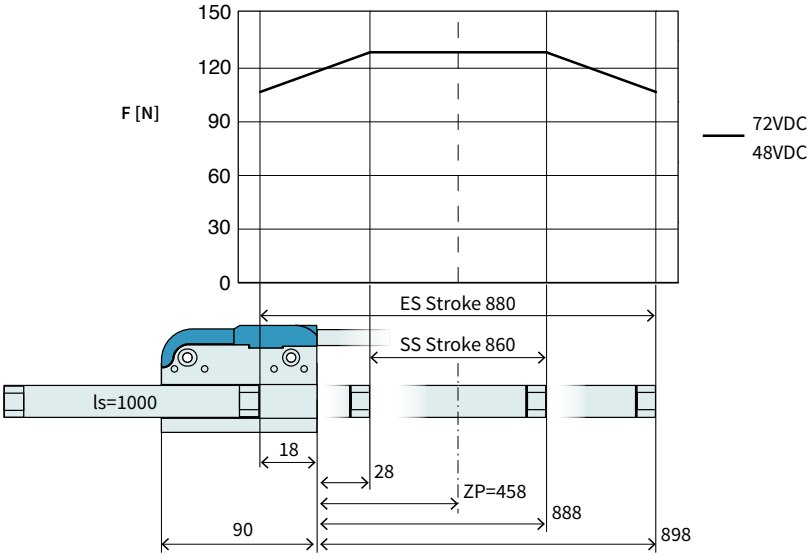

Dimensions in mm

Technical Data P01-37Sx60/860x880-HP				
Stroke				
Standard Stroke (SS)	mm	(in)	860	(33.89)
Extended Stroke (ES)	mm	(in)	880	(34.6)
Force				
Max. Force @ 48VDC	N	(lbf)	128	(28.7)
Max. Force @ 72VDC	N	(lbf)	128	(28.7)
Max. Cont. Force [Passive cooling/ Fan / Fluid]	N	(lbf)	16 / 33 / -	(3.7 / 7.3 / -)
Max. Border Force relative	%		83	
Force Constant	N/A_{pk}	(lbf/A_{pk})	13.4	(3.02)
Velocity				
Max. Velocity @ 48VDC	m/s	(in/s)	3.2	(129.9)
Max. Velocity @ 72VDC	m/s	(in/s)	4.9	(189.9)
Position Detection				
Repeatability	mm	(in)	±0.05	(±0.002)
Linearity	%		± 0.15	
Electrical Data				
Max. Current @ 48VDC	A_{pk}		9.4	
Max. Current @ 72VDC	A_{pk}		9.4	
Max. Cont. Current [Passive cooling /Fan / Fluid]	A_{pk}		1.2 / 2.4 / -	
Thermal Data				
Max. Winding Temperature (Sensor)	°C		120	
Thermal Resistance [Passive cooling / Fan / Fluid]	°K/W		12 / 3 / -	
Thermal Time Constant [Passive cooling / Fan / Fluid]	s		2400 / 600 / -	
Mechanical Data				
Slider Length	mm	(in)	1000	(39)
Slider Mass	g	(lb)	2230	(4.91)

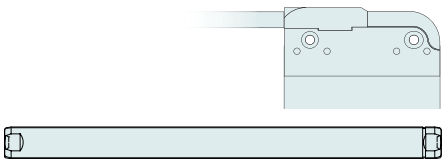

Item	Description	Item-No.
PS01-37Sx60-HP-N	Stator HP, Cable -90°, 0°, +90°	0150-1295
PL01-20x1000/940-HP	Slider 'High Performance'	0150-1514
PL01-20x1000/940-HP-L*	Slider 'High Performance L'	0150-3703

* With this slider, the motor specifications above change.

P01-37Sx60/1060x1080-HP

Max. Stroke: 1080 mm
Peak Force: 128 N

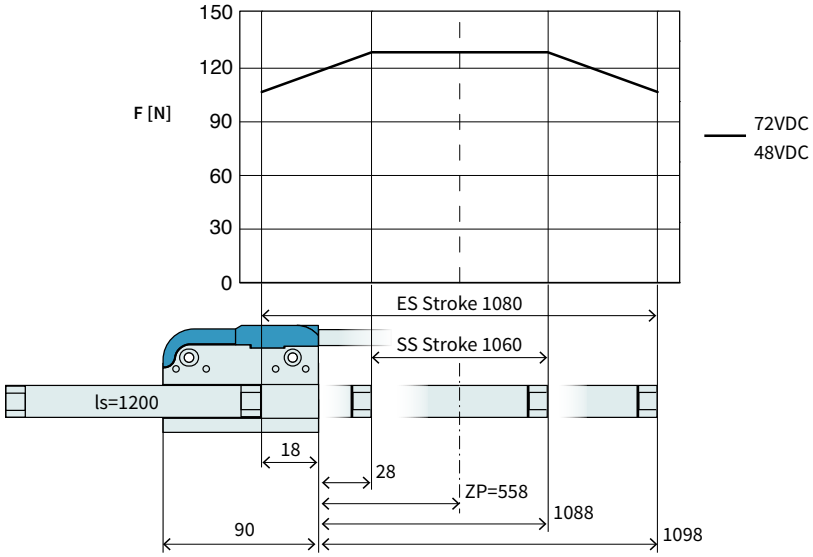

Dimensions in mm

Technical Data P01-37Sx60/1060x1080-HP				
Stroke				
Standard Stroke (SS)	mm	(in)	1060	(41.7)
Extended Stroke (ES)	mm	(in)	1080	(42.49)
Force				
Max. Force @ 48VDC	N	(lbf)	128	(28.7)
Max. Force @ 72VDC	N	(lbf)	128	(28.7)
Max. Cont. Force [Passive cooling/ Fan / Fluid]	N	(lbf)	16 / 33 / -	(3.7 / 7.3 / -)
Max. Border Force relative	%		83	
Force Constant	N/A_{pk}	(lbf/A_{pk})	13.4	(3.02)
Velocity				
Max. Velocity @ 48VDC	m/s	(in/s)	3.2	(129.9)
Max. Velocity @ 72VDC	m/s	(in/s)	4.9	(189.9)
Position Detection				
Repeatability	mm	(in)	±0.05	(±0.002)
Linearity	%		± 0.15	
Electrical Data				
Max. Current @ 48VDC	A_{pk}		9.4	
Max. Current @ 72VDC	A_{pk}		9.4	
Max. Cont. Current [Passive cooling /Fan / Fluid]	A_{pk}		1.2 / 2.4 / -	
Thermal Data				
Max. Winding Temperature (Sensor)	°C		120	
Thermal Resistance [Passive cooling / Fan / Fluid]	°K/W		12 / 3 / -	
Thermal Time Constant [Passive cooling / Fan / Fluid]	s		2400 / 600 / -	
Mechanical Data				
Slider Length	mm	(in)	1200	(47)
Slider Mass	g	(lb)	2690	(5.92)

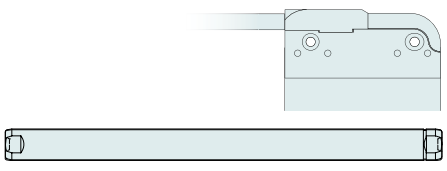

Item	Description	Item-No.
PS01-37Sx60-HP-N	Stator HP, Cable -90°, 0°, +90°	0150-1295
PL01-20x1200/1140-HP	Slider 'High Performance'	0150-1515
PL01-20x1200/1140-HP-L*	Slider 'High Performance L'	0150-2510

* With this slider, the motor specifications above change.

P01-37Sx60/1260x1280-HP

Max. Stroke: 1280 mm
Peak Force: 128 N

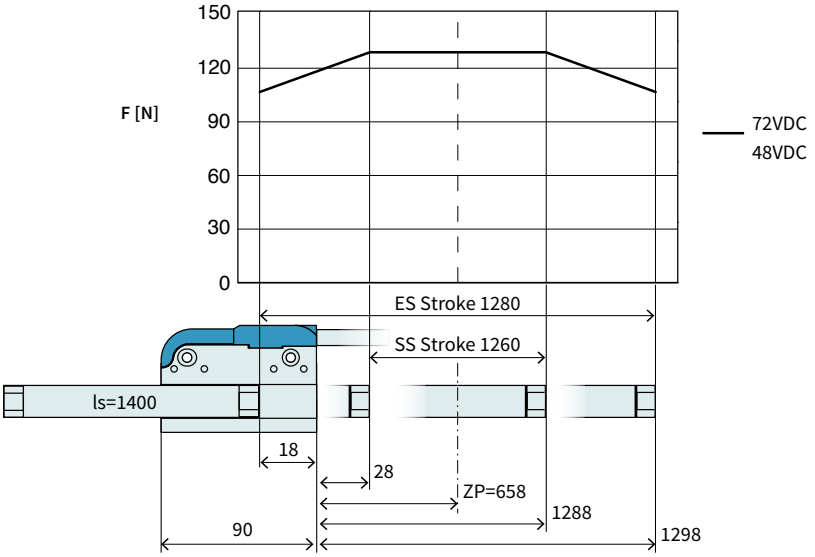

Dimensions in mm

Technical Data P01-37Sx60/1260x1280-HP				
Stroke				
Standard Stroke (SS)	mm	(in)	1260	(49.6)
Extended Stroke (ES)	mm	(in)	1280	(50.39)
Force				
Max. Force @ 48VDC	N	(lbf)	128	(28.7)
Max. Force @ 72VDC	N	(lbf)	128	(28.7)
Max. Cont. Force [Passive cooling/ Fan / Fluid]	N	(lbf)	16 / 33 / -	(3.7 / 7.3 / -)
Max. Border Force relative	%		83	
Force Constant	N/A_{pk}	(lbf/A_{pk})	13.4	(3.02)
Velocity				
Max. Velocity @ 48VDC	m/s	(in/s)	3.2	(129.9)
Max. Velocity @ 72VDC	m/s	(in/s)	4.9	(189.9)
Position Detection				
Repeatability	mm	(in)	±0.05	(±0.002)
Linearity	%		± 0.15	
Electrical Data				
Max. Current @ 48VDC	A_{pk}		9.4	
Max. Current @ 72VDC	A_{pk}		9.4	
Max. Cont. Current [Passive cooling /Fan / Fluid]	A_{pk}		1.2 / 2.4 / -	
Thermal Data				
Max. Winding Temperature (Sensor)	°C		120	
Thermal Resistance [Passive cooling / Fan / Fluid]	°K/W		12 / 3 / -	
Thermal Time Constant [Passive cooling / Fan / Fluid]	s		2400 / 600 / -	
Mechanical Data				
Slider Length	mm	(in)	1400	(55)
Slider Mass	g	(lb)	3160	(6.95)

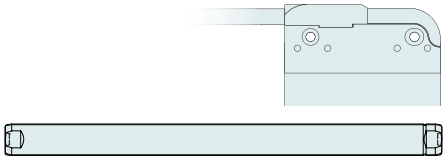

Item	Description	Item-No.
PS01-37Sx60-HP-N	Stator HP, Cable -90°, 0°, +90°	0150-1295

PL01-20x1400/1340-HP	Slider 'High Performance'	0150-1516
PL01-20x1400/1340-HP-L*	Slider 'High Performance L'	on request

* With this slider, the motor specifications above change.

P01-37Sx60/1460x1480-HP

Max. Stroke: 1480 mm
Peak Force: 128 N

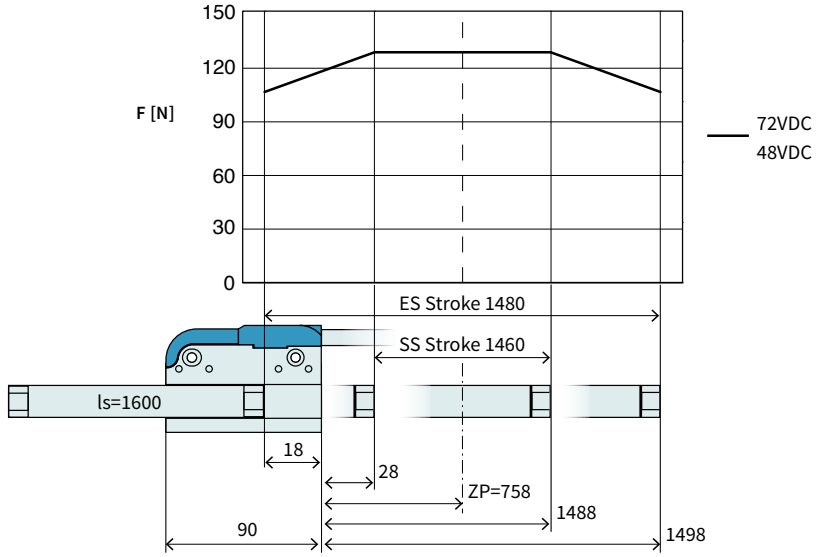

Dimensions in mm

Technical Data P01-37Sx60/1460x1480-HP				
Stroke				
Standard Stroke (SS)	mm	(in)	1460	(57.49)
Extended Stroke (ES)	mm	(in)	1480	(58.29)
Force				
Max. Force @ 48VDC	N	(lbf)	128	(28.7)
Max. Force @ 72VDC	N	(lbf)	128	(28.7)
Max. Cont. Force [Passive cooling/ Fan / Fluid]	N	(lbf)	16 / 33 / -	(3.7 / 7.3 / -)
Max. Border Force relative	%		83	
Force Constant	N/A_{pk}	(lbf/A_{pk})	13.4	(3.02)
Velocity				
Max. Velocity @ 48VDC	m/s	(in/s)	3.2	(129.9)
Max. Velocity @ 72VDC	m/s	(in/s)	4.9	(189.9)
Position Detection				
Repeatability	mm	(in)	±0.05	(±0.002)
Linearity	%		± 0.15	
Electrical Data				
Max. Current @ 48VDC	A_{pk}		9.4	
Max. Current @ 72VDC	A_{pk}		9.4	
Max. Cont. Current [Passive cooling /Fan / Fluid]	A_{pk}		1.2 / 2.4 / -	
Thermal Data				
Max. Winding Temperature (Sensor)	°C		120	
Thermal Resistance [Passive cooling / Fan / Fluid]	°K/W		12 / 3 / -	
Thermal Time Constant [Passive cooling / Fan / Fluid]	s		2400 / 600 / -	
Mechanical Data				
Slider Length	mm	(in)	1600	(63)
Slider Mass	g	(lb)	3620	(7.96)

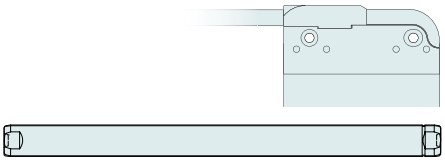

Item	Description	Item-No.
PS01-37Sx60-HP-N	Stator HP, Cable -90°, 0°, +90°	0150-1295

PL01-20x1600/1540-HP	Slider 'High Performance'	0150-1517
PL01-20x1600/1540-HP-L*	Slider 'High Performance L'	on request

* With this slider, the motor specifications above change.

Motor Cable

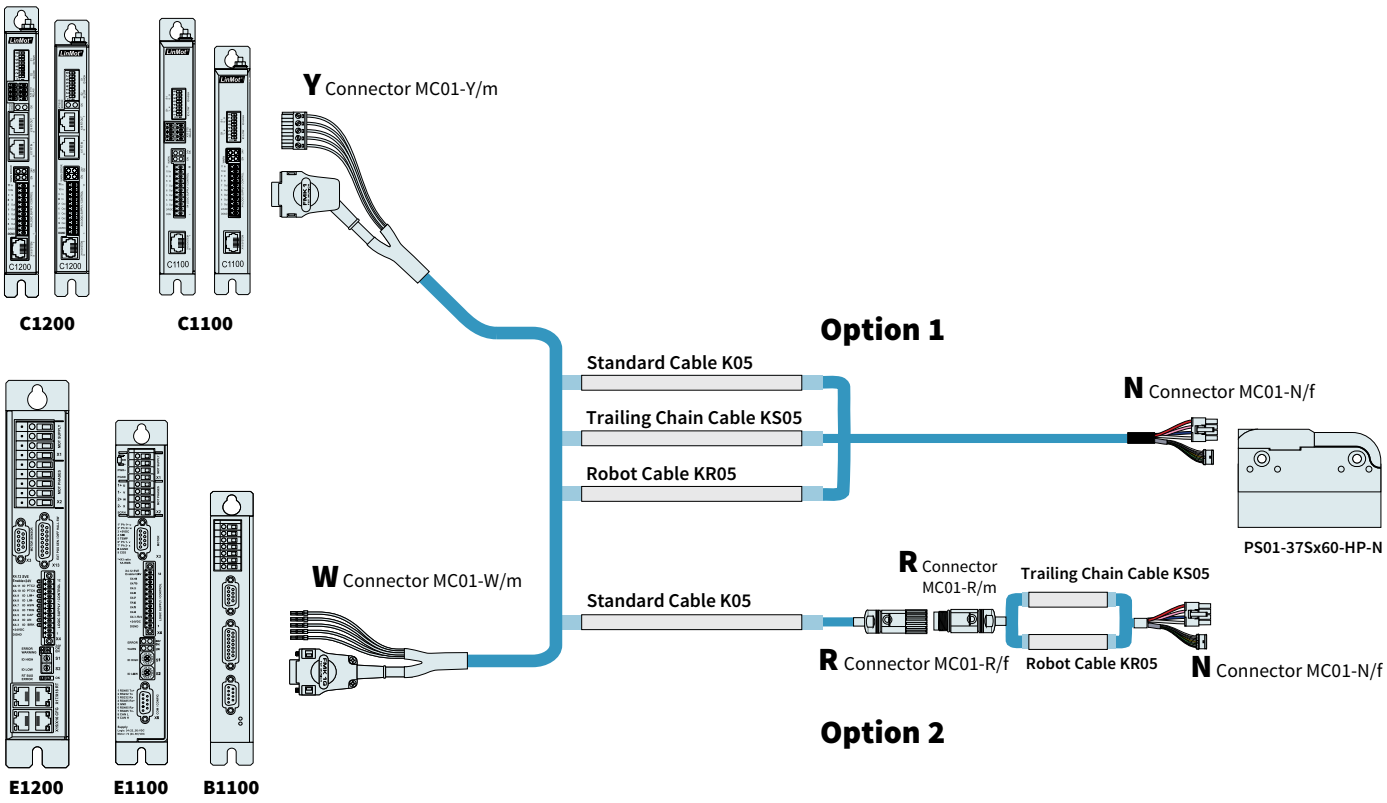

ORDERING INFORMATION

OPTION 1		
Item	**Description**	**Item-No.**
K05-W/N-	Motor Cable W/N, Custom length	0150-3756
K05-Y-Fe/N-	Motor Cable Y/N, Custom length	0150-3503
KS05-W/N-2	Trailing Chain Cable W/N, 2 m	0150-2296
KS05-W/N-4	Trailing Chain Cable W/N, 4 m	0150-2297
KS05-W/N-6	Trailing Chain Cable W/N, 6 m	0150-2298
KS05-W/N-8	Trailing Chain Cable W/N, 8 m	0150-2299
KS05-W/N-	Trailing Chain Cable W/N, Custom length	0150-3412
KS05-Y/N-2	Trailing Chain Cable Y/N, 2 m	0150-2442
KS05-Y/N-4	Trailing Chain Cable Y/N, 4 m	0150-2443
KS05-Y/N-6	Trailing Chain Cable Y/N, 6 m	0150-2444
KS05-Y/N-8	Trailing Chain Cable Y/N, 8 m	0150-2445
KS05-Y-Fe/N-	Trailing Chain Cable Y/N, Custom length	0150-3509
KR05-W/N-	Robot Cable W/N, Custom length	0150-3406
KR05-Y-Fe/N-	Robot Cable Y/N, Custom length	0150-3514

OPTION 2		
Item	**Description**	**Item-No.**
K05-W/R-2	Motor Cable W/R, 2 m	0150-2119
K05-W/R-4	Motor Cable W/R, 4 m	0150-2120
K05-W/R-6	Motor Cable W/R, 6 m	0150-2121
K05-W/R-8	Motor Cable W/R, 8 m	0150-2122
K05-W/R-	Motor Cable W/R, Custom length	0150-3262
K05-Y/R-2	Motor Cable Y/R, 2 m	0150-2421
K05-Y/R-4	Motor Cable Y/R, 4 m	0150-2422
K05-Y/R-6	Motor Cable Y/R, 6 m	0150-2423
K05-Y/R-8	Motor Cable Y/R, 8 m	0150-2424
K05-Y-Fe/R-	Motor Cable Y/R, Custom length	0150-3501
KS05-R/N-	Trailing Chain Cable R/N, Custom length	0150-3486
KR05-R/N-	Robot Cable R/N, Custom length	0150-3757

CONNECTOR & CABLE (INDIVIDUAL)		
Item	**Description**	**Item-No.**
MC01-W/m	Motor Connector W/m	0150-3140
MC01-Y-Fe/m	Motor Connector Y-Fe/m	0150-3289
MC01-R/f	Motor Connector R/f	0150-3129
MC01-N/f	Motor Connector N/f	0150-3407
K05-04/05	Motor Cable per m	0150-1920
KS05-04/05	Trailing Chain Cable per m	0150-1938
KR05-04/05	Robot Cable per m	0150-1846

SLIDER MOUNTING





Item	Description	Item-No.
PLF01-20	Fixed Bearing Set for 19/20 mm sliders	0150-3083
PLF01-20-SS	Fixed Bearing Set for 19/20 mm sliders, stainless steel	0150-3296
PLL01-19	Floating Bearing for 19 mm sliders	0150-3335
PLL01-20	Floating Bearing for 20 mm sliders	0150-3084
PLM01-20-MK	Mounting Kit for 20 mm sliders	0150-3079

FIND MORE PRODUCT DETAILS IN THE CHAPTER "ACCESSORIES".

EXTERNAL POSITION SENSORS



Item	Description	Item-No.
MS01-1/D	Linear Encoder 1µm, A/B (for incremental strip)	0150-1840
MB01-1000	Magnetic incremental strip for MS01-1/D, per cm	0150-1963
KS025-D/D-Encoder	Encoder Cable (Length in m)	0150-3166
KS025-D/D15-Encoder	Encoder Cable (Length in m)	0150-3168

FIND MORE PRODUCT DETAILS IN THE CHAPTER "ACCESSORIES".



Item	Description	Item-No.
MS01-1/D-SSI	Linear Encoder 1µm, A/B (for absolute strip)	0150-2095
MB01-1000-ABS	Magnetic absolute strip for MS01-1/D-SSI (per cm)	0150-2096
EC01-ABS/ENC-12-S	MS01-1/D-SSI Encoder connector straight	0150-3616
KSS01-12-D15/ABS-ENC	Special cable for MS01-1/D-SSI on C1100/C1200/C1400/E1200/E1400 Drives	0150-3652

FIND MORE PRODUCT DETAILS IN THE CHAPTER "ACCESSORIES".

LINEAR MOTORS P01-37x120



- Highly dynamic drives
- Wide stroke range
- Available with cable outlet or with rotatable connector
- Optional with air cooling
- Wide range of applications in handling modules as well as in plant and machine construction

LINEAR MOTORS P01-37x120

Technical Data ____ **199**

Motor Specifications

P01-37x120/40x120-LC **202**

P01-37x120/100x180-LC **203**

P01-37x120/200x280-LC **204**

P01-37x120/300x380-LC **205**

P01-37x120/400x480-LC **206**

P01-37x120/500x580-LC **207**

P01-37x120/600x680-LC **208**

P01-37x120/700x780-LC **209**

P01-37x120/800x880-LC **210**

P01-37x120/1000x1080-LC **211**

P01-37x120/1200x1280-LC **212**

P01-37x120/1400x1480-LC **213**

Linear Guides ____ **214**

Accessories ____ **216**



MOTOR FAMILY P01-37x120

Technical Data				
Stroke				
Standard Stroke (SS)	mm	(in)	≤ 1400	(≤ 55.1)
Extended Stroke (ES)	mm	(in)	≤ 1480	(≤ 58.3)
Force				
Max. Force @ 48VDC	N	(lbf)	128	(28.7)
Max. Force @ 72VDC	N	(lbf)	163	(36.7)
Max. Cont. Force [Passive cooling/ Fan / Fluid]	N	(lbf)	28 / 52 / -	(6.4 / 12 / -)
Max. Border Force relative	%		≤ 67	
Force Constant	N/A_{pk}	(lbf/A_{pk})	20.4	(4.59)
Velocity				
Max. Velocity @ 48VDC	m/s	(in/s)	2.2	(84.9)
Max. Velocity @ 72VDC	m/s	(in/s)	3.2	(129.9)
Position Detection				
Position Resolution	mm	(in)	0.005	(0.0002)
Repeatability	mm	(in)	±0.05	(±0.002)
Position Resolution with ES	mm	(in)	0.001	(0.00004)
Repeatability with ES	mm	(in)	±0.01	(±0.0004)
Linearity with ES	mm	(in)	±0.01	(±0.0004)
Electrical Data				
Max. Current @ 48VDC	A_{pk}		6.2	
Max. Current @ 72VDC	A_{pk}		7.9	
Max. Cont. Current [Passive cooling /Fan / Fluid]	A_{pk}		1.4 / 2.5 / -	
Terminal Resistance 25 °C / 120 °C	Ohm		6.2 / 8.5	
Terminal Inductivity	mH		3.1	
Magnetic Period	mm	(in)	40	(1.57)
Thermal Data				
Max. Winding Temperature (Sensor)	°C		90	
Thermal Resistance [Passive cooling / Fan / Fluid]	°K/W		3.3 / 0.98 / -	
Thermal Time Constant [Passive cooling / Fan / Fluid]	s		1300 / 390 / -	
Mechanical Data				
Stator Diameter	mm	(in)	37	(1.5)
Stator Length [Connector type / Cable type]	mm	(in)	216 / 227	(8.5 / 8.9)
Stator Mass	g	(lb)	740	(1.6)
Slider Diameter	mm	(in)	20	(0.79)
Slider Length	mm	(in)	240 - 1600	(9.4 - 63)
Slider Mass	g	(lb)	490 - 3620	(1.1 - 7.96)
IP Code			IP 65	

STATOR CONNECTOR TYPE

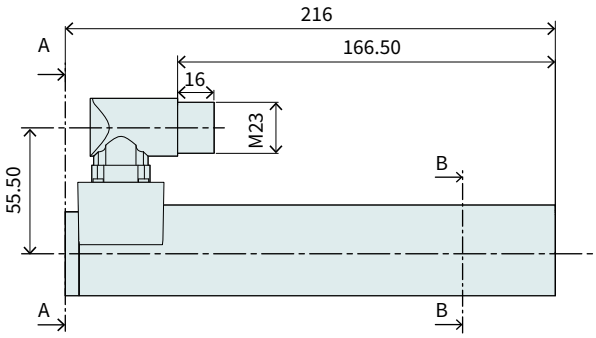

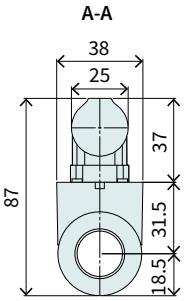

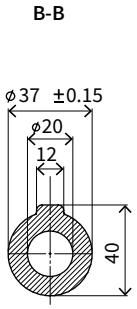

Item	Description	Item-No.
PS01-37x120-C	Stator with IP67 Connector M23/9(m)	0150-1223

STATOR CABLE TYPE

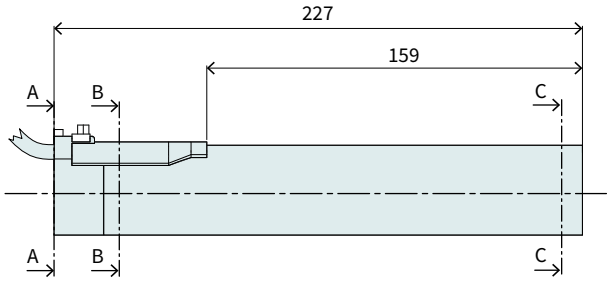

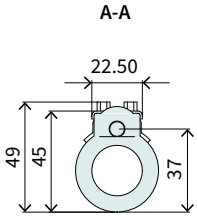

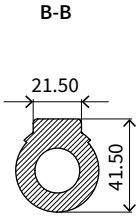

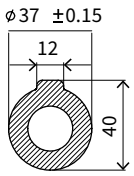

Item	Description	Item-No.
PS01-37x120	Stator, 1.5 m Cable, Connector P/10(m)	0150-1204
PS01-37x120-C20	Stator, 0.2 m Cable, IP67 St. M23/9(m)	0150-1237

CONNECTOR

Motor Connector Wiring	PS01-37x120-C PS01-37x120-C20	PS01-37x120	Wire color motor cable
	C-Connector	P-Connector	
Ph 1+	A	1	red
Ph 1-	B	2	pink
Ph 2+	C	3	blue
Ph 2-	D	4	grey
+5VDC	E	5	white
GND	F	6	inner shield
Sin	G	7	yellow
Cos	H	8	green
Temp.	L	9	black
Shield	Housing	10	outer Shield

C-Connector

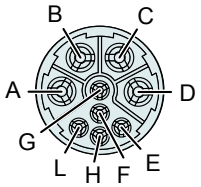

View: Motor Connector, plug side

P-Connector

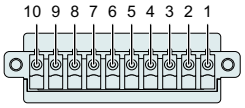

SLIDER

Slider Standard / Heavy Duty

Number of grooves determines the slider type
(see chapter 2 / slider) and marks the front end.

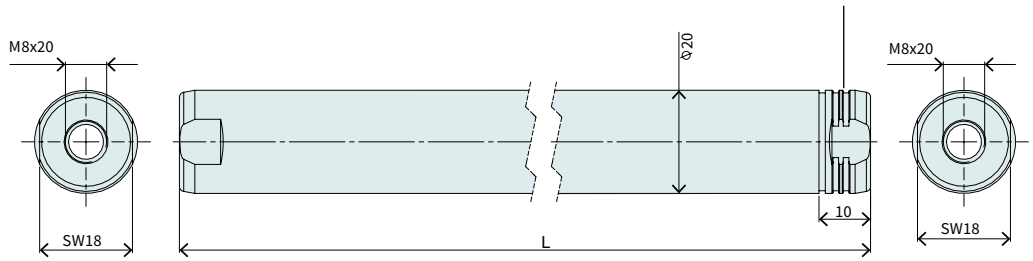

High-Clearance Slider

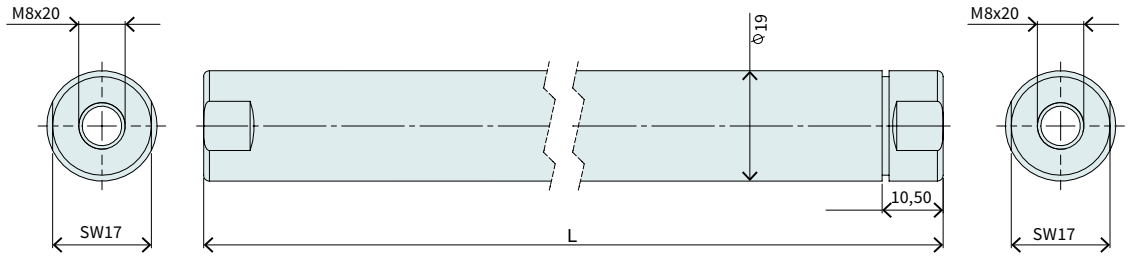

Slider Standard				
Item	Description	Max. Stroke [mm]	Standard Stroke [mm]	Item-No.
PL01-20x240/180-LC	Slider 'standard LC'	120	40	0150-2560
PL01-20x300/240-LC	Slider 'standard LC'	180	100	0150-2561
PL01-20x400/340-LC	Slider 'standard LC'	280	200	0150-2562
PL01-20x500/440-LC	Slider 'standard LC'	380	300	0150-2563
PL01-20x600/540-LC	Slider 'standard LC'	480	400	0150-2564
PL01-20x700/640-LC	Slider 'standard LC'	580	500	0150-2565
PL01-20x800/740-LC	Slider 'standard LC'	680	600	0150-2566
PL01-20x900/840-LC	Slider 'standard LC'	780	700	0150-2567
PL01-20x1000/940-LC	Slider 'standard LC'	880	800	0150-2568
PL01-20x1200/1140-LC	Slider 'standard LC'	1080	1000	0150-2569
PL01-20x1400/1340-LC	Slider 'standard LC'	1280	1200	0150-2570
PL01-20x1600/1540-LC	Slider 'standard LC'	1480	1400	0150-2571

Slider Heavy Duty				
Item	Description	Max. Stroke [mm]	Standard Stroke [mm]	Item-No.
PL02-20x240/180-LC	Slider 'heavy duty LC'	120	40	0150-2572
PL02-20x300/240-LC	Slider 'heavy duty LC'	180	100	0150-2573
PL02-20x400/340-LC	Slider 'heavy duty LC'	280	200	0150-2574
PL02-20x500/440-LC	Slider 'heavy duty LC'	380	300	0150-2575
PL02-20x600/540-LC	Slider 'heavy duty LC'	480	400	0150-2576
PL02-20x700/640-LC	Slider 'heavy duty LC'	580	500	0150-2577
PL02-20x800/740-LC	Slider 'heavy duty LC'	680	600	0150-2578
PL02-20x900/840-LC	Slider 'heavy duty LC'	780	700	0150-2579

High-Clearance Slider				
Item	Description	Max. Stroke [mm]	Standard Stroke [mm]	Item-No.
PL01-19x240/160	Slider 'high clearance'	100	80	0150-1488
PL01-19x300/220	Slider 'high clearance'	160	140	0150-1489
PL01-19x395/320	Slider 'high clearance'	260	240	0150-1452
PL01-19x500/420	Slider 'high clearance'	360	340	0150-1455
PL01-19x600/520	Slider 'high clearance'	460	440	0150-1456
PL01-19x700/620	Slider 'high clearance'	560	540	0150-1457

P01-37x120/40x120-LC

Max. Stroke: 120 mm
Peak Force: 163 N

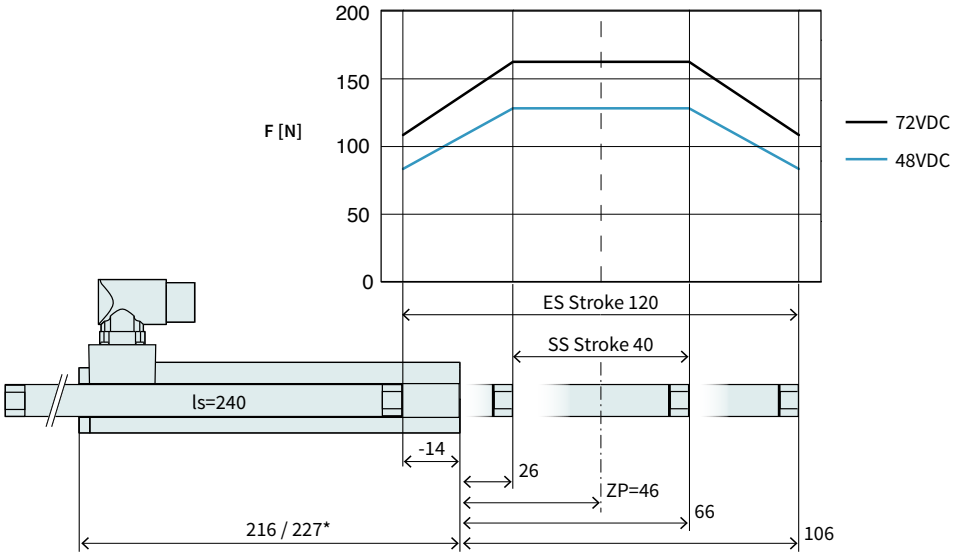

Dimensions in mm
* Cable Type

Technical Data P01-37x120/40x120-LC				
Stroke				
Standard Stroke (SS)	mm	(in)	40	(1.57)
Extended Stroke (ES)	mm	(in)	120	(4.71)
Force				
Max. Force @ 48VDC	N	(lbf)	128	(28.7)
Max. Force @ 72VDC	N	(lbf)	163	(36.7)
Max. Cont. Force [Passive cooling/ Fan / Fluid]	N	(lbf)	28 / 52 / -	(6.4 / 12 / -)
Max. Border Force relative	%		67	
Force Constant	N/A_{pk}	(lbf/A_{pk})	20.4	(4.59)
Velocity				
Max. Velocity @ 48VDC	m/s	(in/s)	2.2	(84.9)
Max. Velocity @ 72VDC	m/s	(in/s)	3.2	(129.9)
Position Detection				
Repeatability	mm	(in)	±0.05	(±0.002)
Linearity	%		± 0.5	
Electrical Data				
Max. Current @ 48VDC	A_{pk}		6.2	
Max. Current @ 72VDC	A_{pk}		7.9	
Max. Cont. Current [Passive cooling /Fan / Fluid]	A_{pk}		1.4 / 2.5 / -	
Thermal Data				
Max. Winding Temperature (Sensor)	°C		90	
Thermal Resistance [Passive cooling / Fan / Fluid]	°K/W		3.3 / 0.98 / -	
Thermal Time Constant [Passive cooling / Fan / Fluid]	s		1300 / 390 / -	
Mechanical Data				
Slider Length	mm	(in)	240	(9.4)
Slider Mass	g	(lb)	490	(1.08)

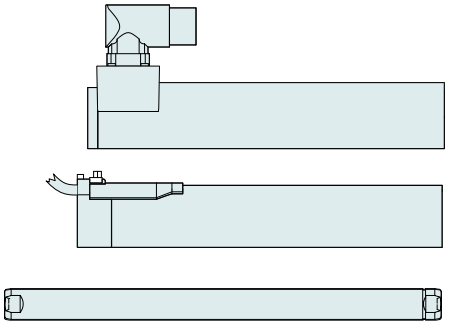

Item	Description	Item-No.
PS01-37x120-C	Stator with IP67 Connector M23/9(m)	0150-1223
PS01-37x120	Stator, 1.5m Cable, Connector P/10(m)	0150-1204
PS01-37x120-C20	Stator, 0.2m Cable, IP67 St. M23/9(m)	0150-1237
PL01-20x240/180-LC	Slider 'standard LC'	0150-2560
PL02-20x240/180-LC	Slider 'heavy duty LC'	0150-2572
PL01-19x240/160*	Slider 'high clearance'	0150-1448

* With this slider, the motor specifications above change.

P01-37x120/100x180-LC

Max. Stroke: 180 mm
Peak Force: 163 N

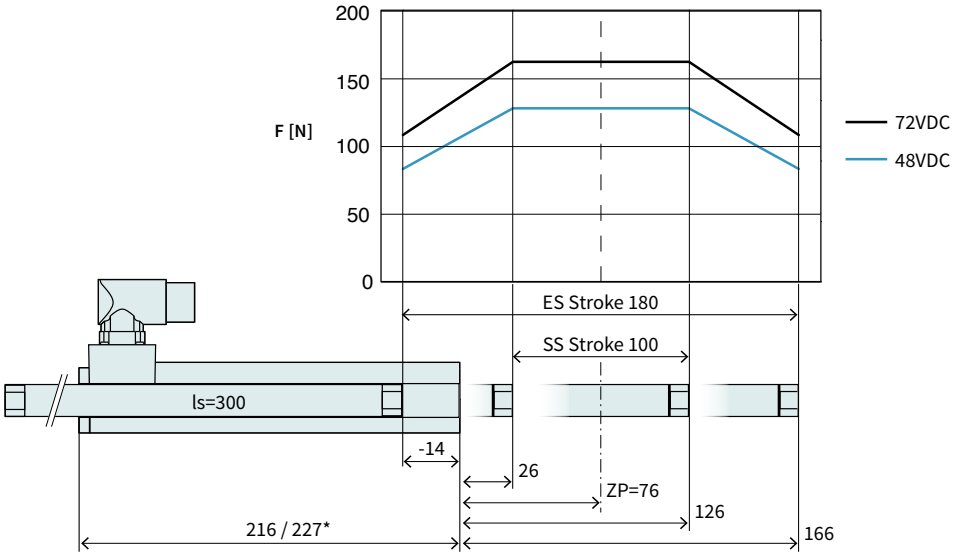

Dimensions in mm
* Cable Type

Technical Data P01-37x120/100x180-LC				
Stroke				
Standard Stroke (SS)	mm	(in)	100	(3.93)
Extended Stroke (ES)	mm	(in)	180	(7.08)
Force				
Max. Force @ 48VDC	N	(lbf)	128	(28.7)
Max. Force @ 72VDC	N	(lbf)	163	(36.7)
Max. Cont. Force [Passive cooling/ Fan / Fluid]	N	(lbf)	28 / 52 / -	(6.4 / 12 / -)
Max. Border Force relative	%		67	
Force Constant	N/A_{pk}	(lbf/A_{pk})	20.4	(4.59)
Velocity				
Max. Velocity @ 48VDC	m/s	(in/s)	2.2	(84.9)
Max. Velocity @ 72VDC	m/s	(in/s)	3.2	(129.9)
Position Detection				
Repeatability	mm	(in)	±0.05	(±0.002)
Linearity	%		± 0.4	
Electrical Data				
Max. Current @ 48VDC	A_{pk}		6.2	
Max. Current @ 72VDC	A_{pk}		7.9	
Max. Cont. Current [Passive cooling /Fan / Fluid]	A_{pk}		1.4 / 2.5 / -	
Thermal Data				
Max. Winding Temperature (Sensor)	°C		90	
Thermal Resistance [Passive cooling / Fan / Fluid]	°K/W		3.3 / 0.98 / -	
Thermal Time Constant [Passive cooling / Fan / Fluid]	s		1300 / 390 / -	
Mechanical Data				
Slider Length	mm	(in)	300	(12)
Slider Mass	g	(lb)	630	(1.39)

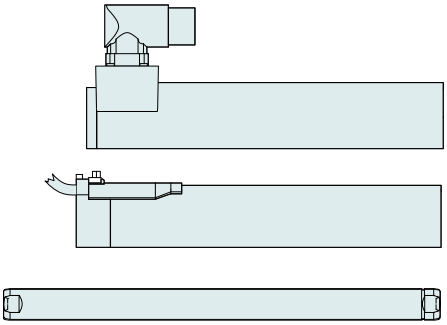

Item	Description	Item-No.
PS01-37x120-C	Stator with IP67 Connector M23/9(m)	0150-1223
PS01-37x120	Stator, 1.5m Cable, Connector P/10(m)	0150-1204
PS01-37x120-C20	Stator, 0.2m Cable, IP67 St. M23/9(m)	0150-1237
PL01-20x300/240-LC	Slider 'standard LC'	0150-2561
PL02-20x300/240-LC	Slider 'heavy duty LC'	0150-2573
PL01-19x300/220*	Slider 'high clearance'	0150-1449

* With this slider, the motor specifications above change.

P01-37x120/200x280-LC

Max. Stroke: 280 mm
Peak Force: 163 N

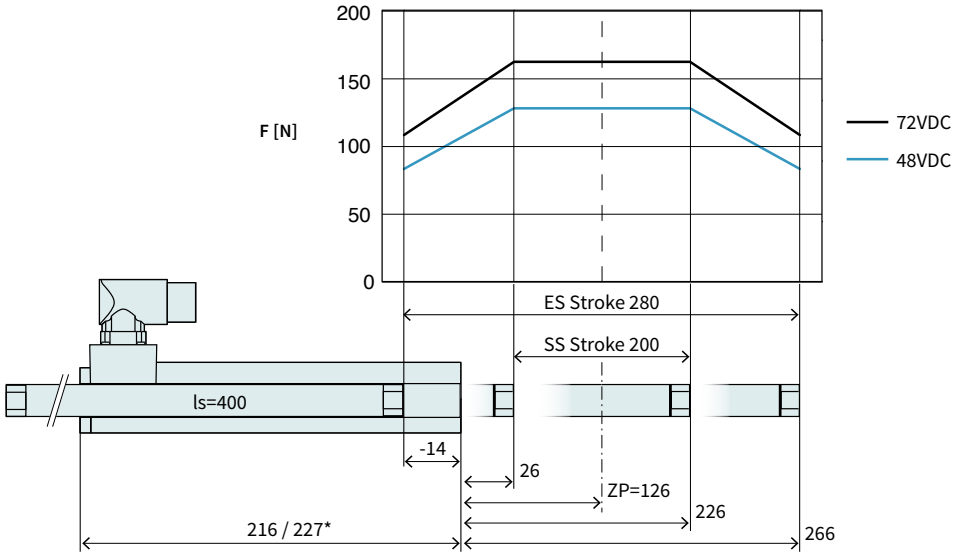

Dimensions in mm
* Cable Type

Technical Data P01-37x120/200x280-LC				
Stroke				
Standard Stroke (SS)	mm	(in)	200	(7.86)
Extended Stroke (ES)	mm	(in)	280	(10.99)
Force				
Max. Force @ 48VDC	N	(lbf)	128	(28.7)
Max. Force @ 72VDC	N	(lbf)	163	(36.7)
Max. Cont. Force [Passive cooling/ Fan / Fluid]	N	(lbf)	28 / 52 / -	(6.4 / 12 / -)
Max. Border Force relative	%		67	
Force Constant	N/A_{pk}	(lbf/A_{pk})	20.4	(4.59)
Velocity				
Max. Velocity @ 48VDC	m/s	(in/s)	2.2	(84.9)
Max. Velocity @ 72VDC	m/s	(in/s)	3.2	(129.9)
Position Detection				
Repeatability	mm	(in)	±0.05	(±0.002)
Linearity	%		± 0.3	
Electrical Data				
Max. Current @ 48VDC	A_{pk}		6.2	
Max. Current @ 72VDC	A_{pk}		7.9	
Max. Cont. Current [Passive cooling /Fan / Fluid]	A_{pk}		1.4 / 2.5 / -	
Thermal Data				
Max. Winding Temperature (Sensor)	°C		90	
Thermal Resistance [Passive cooling / Fan / Fluid]	°K/W		3.3 / 0.98 / -	
Thermal Time Constant [Passive cooling / Fan / Fluid]	s		1300 / 390 / -	
Mechanical Data				
Slider Length	mm	(in)	400	(16)
Slider Mass	g	(lb)	860	(1.89)

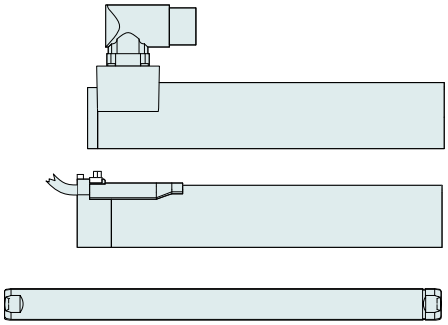

Item	Description	Item-No.
PS01-37x120-C	Stator with IP67 Connector M23/9(m)	0150-1223
PS01-37x120	Stator, 1.5m Cable, Connector P/10(m)	0150-1204
PS01-37x120-C20	Stator, 0.2m Cable, IP67 St. M23/9(m)	0150-1237
PL01-20x400/340-LC	Slider 'standard LC'	0150-2562
PL02-20x400/340-LC	Slider 'heavy duty LC'	0150-2574
PL01-19x395/320*	Slider 'high clearance'	0150-1452

* With this slider, the motor specifications above change.

P01-37x120/300x380-LC

Max. Stroke: 380 mm
Peak Force: 163 N

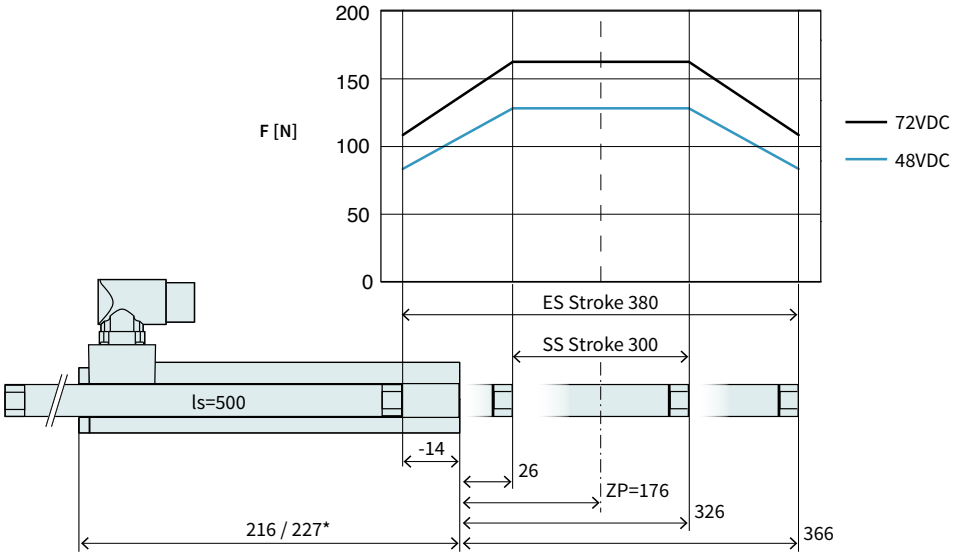

Dimensions in mm
* Cable Type

Technical Data P01-37x120/300x380-LC				
Stroke				
Standard Stroke (SS)	mm	(in)	300	(11.8)
Extended Stroke (ES)	mm	(in)	380	(14.99)
Force				
Max. Force @ 48VDC	N	(lbf)	128	(28.7)
Max. Force @ 72VDC	N	(lbf)	163	(36.7)
Max. Cont. Force [Passive cooling/ Fan / Fluid]	N	(lbf)	28 / 52 / -	(6.4 / 12 / -)
Max. Border Force relative	%		67	
Force Constant	N/A_{pk}	(lbf/A_{pk})	20.4	(4.59)
Velocity				
Max. Velocity @ 48VDC	m/s	(in/s)	2.2	(84.9)
Max. Velocity @ 72VDC	m/s	(in/s)	3.2	(129.9)
Position Detection				
Repeatability	mm	(in)	±0.05	(±0.002)
Linearity	%		± 0.25	
Electrical Data				
Max. Current @ 48VDC	A_{pk}		6.2	
Max. Current @ 72VDC	A_{pk}		7.9	
Max. Cont. Current [Passive cooling /Fan / Fluid]	A_{pk}		1.4 / 2.5 / -	
Thermal Data				
Max. Winding Temperature (Sensor)	°C		90	
Thermal Resistance [Passive cooling / Fan / Fluid]	°K/W		3.3 / 0.98 / -	
Thermal Time Constant [Passive cooling / Fan / Fluid]	s		1300 / 390 / -	
Mechanical Data				
Slider Length	mm	(in)	500	(20)
Slider Mass	g	(lb)	1090	(2.4)

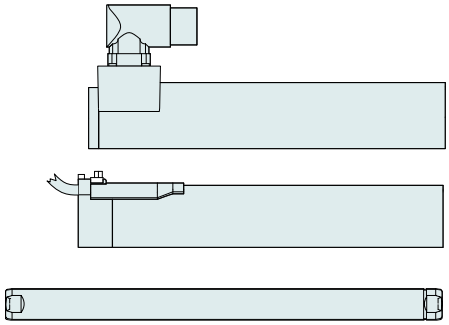

Item	Description	Item-No.
PS01-37x120-C	Stator with IP67 Connector M23/9(m)	0150-1223
PS01-37x120	Stator, 1.5m Cable, Connector P/10(m)	0150-1204
PS01-37x120-C20	Stator, 0.2m Cable, IP67 St. M23/9(m)	0150-1237
PL01-20x500/440-LC	Slider 'standard LC'	0150-2563
PL02-20x500/440-LC	Slider 'heavy duty LC'	0150-2575
PL01-19x500/420*	Slider 'high clearance'	0150-1455

* With this slider, the motor specifications above change.

P01-37x120/400x480-LC

Max. Stroke: 480 mm
Peak Force: 163 N

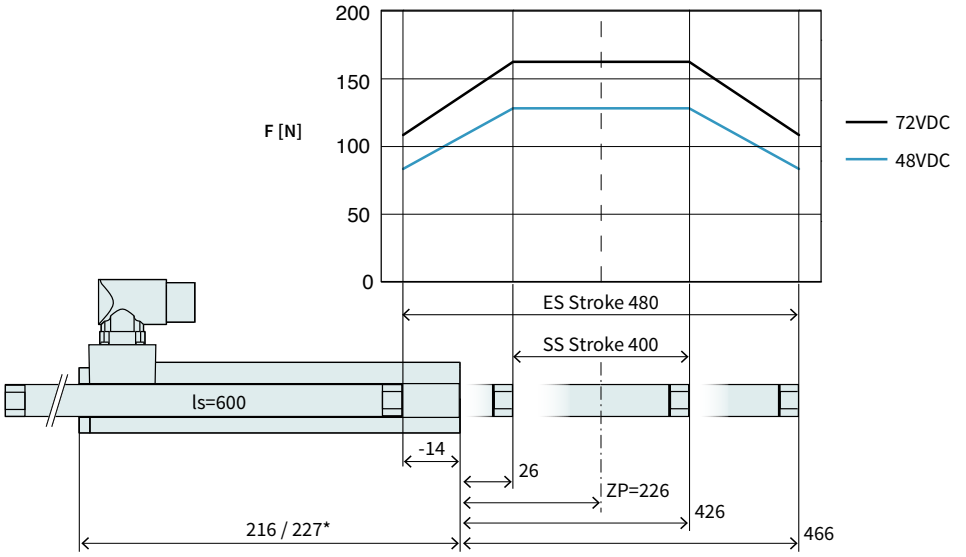

Dimensions in mm
* Cable Type

Technical Data P01-37x120/400x480-LC				
Stroke				
Standard Stroke (SS)	mm	(in)	400	(15.69)
Extended Stroke (ES)	mm	(in)	480	(18.89)
Force				
Max. Force @ 48VDC	N	(lbf)	128	(28.7)
Max. Force @ 72VDC	N	(lbf)	163	(36.7)
Max. Cont. Force [Passive cooling/ Fan / Fluid]	N	(lbf)	28 / 52 / -	(6.4 / 12 / -)
Max. Border Force relative	%		67	
Force Constant	N/A_{pk}	(lbf/A_{pk})	20.4	(4.59)
Velocity				
Max. Velocity @ 48VDC	m/s	(in/s)	2.2	(84.9)
Max. Velocity @ 72VDC	m/s	(in/s)	3.2	(129.9)
Position Detection				
Repeatability	mm	(in)	±0.05	(±0.002)
Linearity	%		± 0.2	
Electrical Data				
Max. Current @ 48VDC	A_{pk}		6.2	
Max. Current @ 72VDC	A_{pk}		7.9	
Max. Cont. Current [Passive cooling /Fan / Fluid]	A_{pk}		1.4 / 2.5 / -	
Thermal Data				
Max. Winding Temperature (Sensor)	°C		90	
Thermal Resistance [Passive cooling / Fan / Fluid]	°K/W		3.3 / 0.98 / -	
Thermal Time Constant [Passive cooling / Fan / Fluid]	s		1300 / 390 / -	
Mechanical Data				
Slider Length	mm	(in)	600	(24)
Slider Mass	g	(lb)	1330	(2.93)

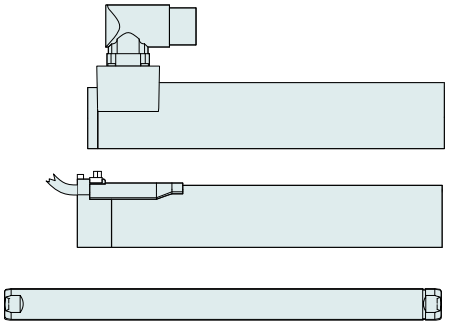

Item	Description	Item-No.
PS01-37x120-C	Stator with IP67 Connector M23/9(m)	0150-1223
PS01-37x120	Stator, 1.5m Cable, Connector P/10(m)	0150-1204
PS01-37x120-C20	Stator, 0.2m Cable, IP67 St. M23/9(m)	0150-1237
PL01-20x600/540-LC	Slider 'standard LC'	0150-2564
PL02-20x600/540-LC	Slider 'heavy duty LC'	0150-2576
PL01-19x600/520*	Slider 'high clearance'	0150-1456

* With this slider, the motor specifications above change.

P01-37x120/500x580-LC

Max. Stroke: 580 mm
Peak Force: 163 N

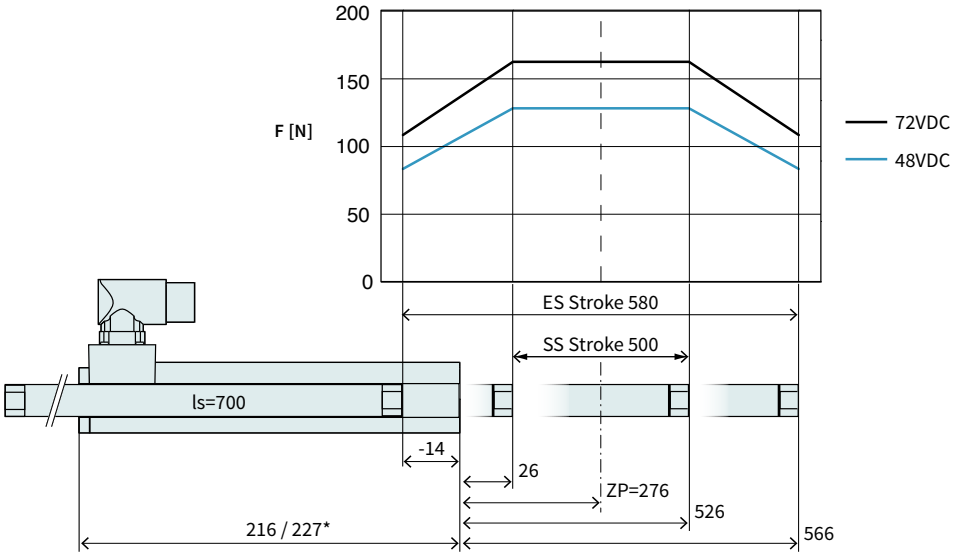

Dimensions in mm
* Cable Type

Technical Data P01-37x120/500x580-LC				
Stroke				
Standard Stroke (SS)	mm	(in)	500	(19.69)
Extended Stroke (ES)	mm	(in)	580	(22.8)
Force				
Max. Force @ 48VDC	N	(lbf)	128	(28.7)
Max. Force @ 72VDC	N	(lbf)	163	(36.7)
Max. Cont. Force [Passive cooling/ Fan / Fluid]	N	(lbf)	28 / 52 / -	(6.4 / 12 / -)
Max. Border Force relative	%		67	
Force Constant	N/A_{pk}	(lbf/A_{pk})	20.4	(4.59)
Velocity				
Max. Velocity @ 48VDC	m/s	(in/s)	2.2	(84.9)
Max. Velocity @ 72VDC	m/s	(in/s)	3.2	(129.9)
Position Detection				
Repeatability	mm	(in)	±0.05	(±0.002)
Linearity	%		± 0.2	
Electrical Data				
Max. Current @ 48VDC	A_{pk}		6.2	
Max. Current @ 72VDC	A_{pk}		7.9	
Max. Cont. Current [Passive cooling /Fan / Fluid]	A_{pk}		1.4 / 2.5 / -	
Thermal Data				
Max. Winding Temperature (Sensor)	°C		90	
Thermal Resistance [Passive cooling / Fan / Fluid]	°K/W		3.3 / 0.98 / -	
Thermal Time Constant [Passive cooling / Fan / Fluid]	s		1300 / 390 / -	
Mechanical Data				
Slider Length	mm	(in)	700	(28)
Slider Mass	g	(lb)	1560	(3.43)

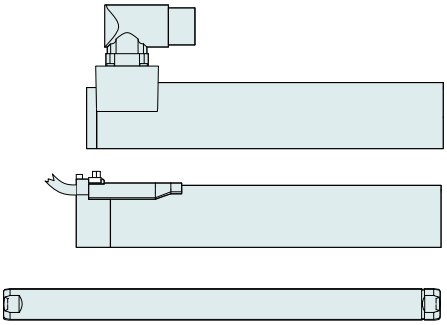

Item	Description	Item-No.
PS01-37x120-C	Stator with IP67 Connector M23/9(m)	0150-1223
PS01-37x120	Stator, 1.5m Cable, Connector P/10(m)	0150-1204
PS01-37x120-C20	Stator, 0.2m Cable, IP67 St. M23/9(m)	0150-1237
PL01-20x700/640-LC	Slider 'standard LC'	0150-2565
PL02-20x700/640-LC	Slider 'heavy duty LC'	0150-2577
PL01-19x700/620*	Slider 'high clearance'	0150-1457

* With this slider, the motor specifications above change.

P01-37x120/600x680-LC

Max. Stroke: 680 mm
Peak Force: 163 N

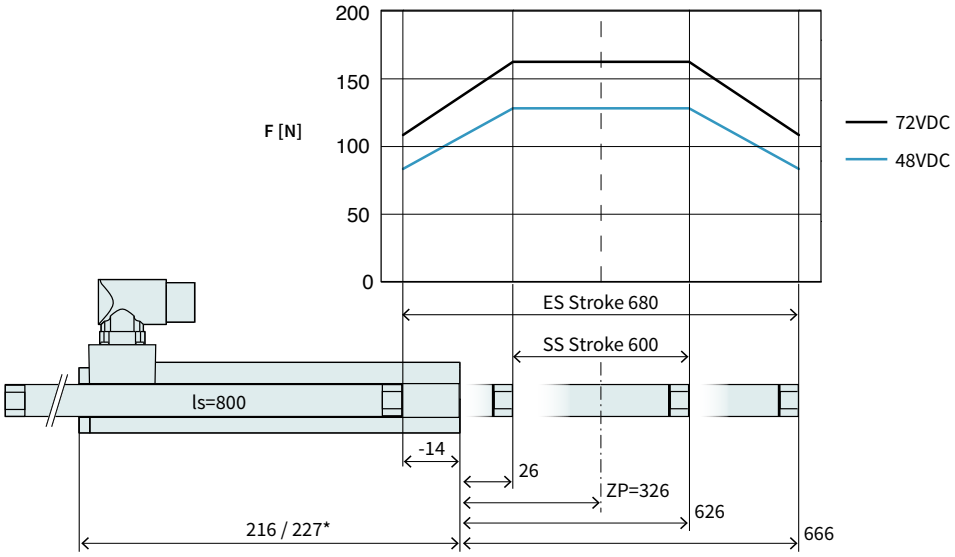

Dimensions in mm
* Cable Type

Technical Data P01-37x120/600x680-LC				
Stroke				
Standard Stroke (SS)	mm	(in)	600	(23.6)
Extended Stroke (ES)	mm	(in)	680	(26.8)
Force				
Max. Force @ 48VDC	N	(lbf)	128	(28.7)
Max. Force @ 72VDC	N	(lbf)	163	(36.7)
Max. Cont. Force [Passive cooling/ Fan / Fluid]	N	(lbf)	28 / 52 / -	(6.4 / 12 / -)
Max. Border Force relative	%		67	
Force Constant	N/A_{pk}	(lbf/A_{pk})	20.4	(4.59)
Velocity				
Max. Velocity @ 48VDC	m/s	(in/s)	2.2	(84.9)
Max. Velocity @ 72VDC	m/s	(in/s)	3.2	(129.9)
Position Detection				
Repeatability	mm	(in)	±0.05	(±0.002)
Linearity	%		± 0.15	
Electrical Data				
Max. Current @ 48VDC	A_{pk}		6.2	
Max. Current @ 72VDC	A_{pk}		7.9	
Max. Cont. Current [Passive cooling /Fan / Fluid]	A_{pk}		1.4 / 2.5 / -	
Thermal Data				
Max. Winding Temperature (Sensor)	°C		90	
Thermal Resistance [Passive cooling / Fan / Fluid]	°K/W		3.3 / 0.98 / -	
Thermal Time Constant [Passive cooling / Fan / Fluid]	s		1300 / 390 / -	
Mechanical Data				
Slider Length	mm	(in)	800	(31)
Slider Mass	g	(lb)	1790	(3.94)

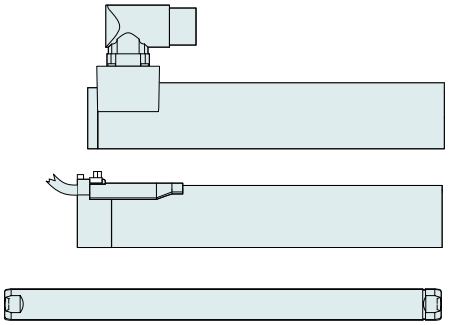

Item	Description	Item-No.
PS01-37x120-C	Stator with IP67 Connector M23/9(m)	0150-1223
PS01-37x120	Stator, 1.5m Cable, Connector P/10(m)	0150-1204
PS01-37x120-C20	Stator, 0.2m Cable, IP67 St. M23/9(m)	0150-1237
PL01-20x800/740-LC	Slider 'standard LC'	0150-2566
PL02-20x800/740-LC	Slider 'heavy duty LC'	0150-2578

P01-37x120/700x780-LC

Max. Stroke: 780 mm
Peak Force: 163 N

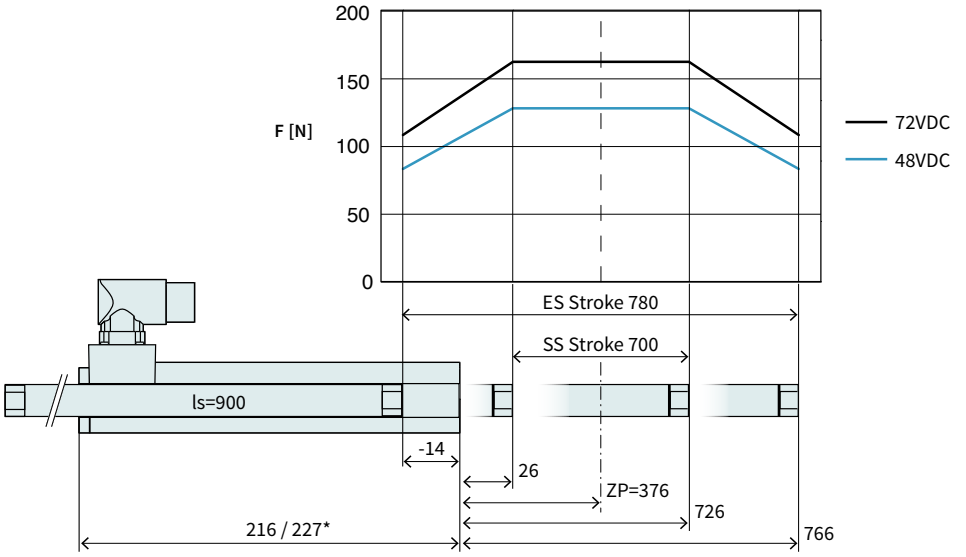

Dimensions in mm
* Cable Type

Technical Data P01-37x120/700x780-LC				
Stroke				
Standard Stroke (SS)	mm	(in)	700	(27.6)
Extended Stroke (ES)	mm	(in)	780	(30.69)
Force				
Max. Force @ 48VDC	N	(lbf)	128	(28.7)
Max. Force @ 72VDC	N	(lbf)	163	(36.7)
Max. Cont. Force [Passive cooling/ Fan / Fluid]	N	(lbf)	28 / 52 / -	(6.4 / 12 / -)
Max. Border Force relative	%		67	
Force Constant	N/A_{pk}	(lbf/A_{pk})	20.4	(4.59)
Velocity				
Max. Velocity @ 48VDC	m/s	(in/s)	2.2	(84.9)
Max. Velocity @ 72VDC	m/s	(in/s)	3.2	(129.9)
Position Detection				
Repeatability	mm	(in)	±0.05	(±0.002)
Linearity	%		± 0.15	
Electrical Data				
Max. Current @ 48VDC	A_{pk}		6.2	
Max. Current @ 72VDC	A_{pk}		7.9	
Max. Cont. Current [Passive cooling /Fan / Fluid]	A_{pk}		1.4 / 2.5 / -	
Thermal Data				
Max. Winding Temperature (Sensor)	°C		90	
Thermal Resistance [Passive cooling / Fan / Fluid]	°K/W		3.3 / 0.98 / -	
Thermal Time Constant [Passive cooling / Fan / Fluid]	s		1300 / 390 / -	
Mechanical Data				
Slider Length	mm	(in)	900	(35)
Slider Mass	g	(lb)	2020	(4.44)

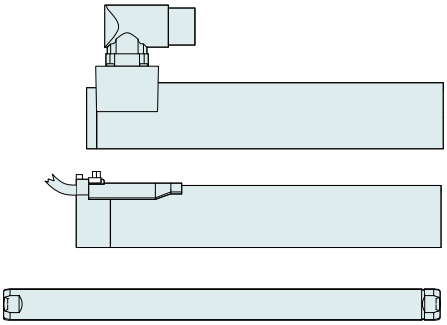

Item	Description	Item-No.
PS01-37x120-C	Stator with IP67 Connector M23/9(m)	0150-1223
PS01-37x120	Stator, 1.5m Cable, Connector P/10(m)	0150-1204
PS01-37x120-C20	Stator, 0.2m Cable, IP67 St. M23/9(m)	0150-1237
PL01-20x900/840-LC	Slider 'standard LC'	0150-2567
PL02-20x900/840-LC	Slider 'heavy duty LC'	0150-2579

P01-37x120/800x880-LC

Max. Stroke: 880 mm
Peak Force: 163 N

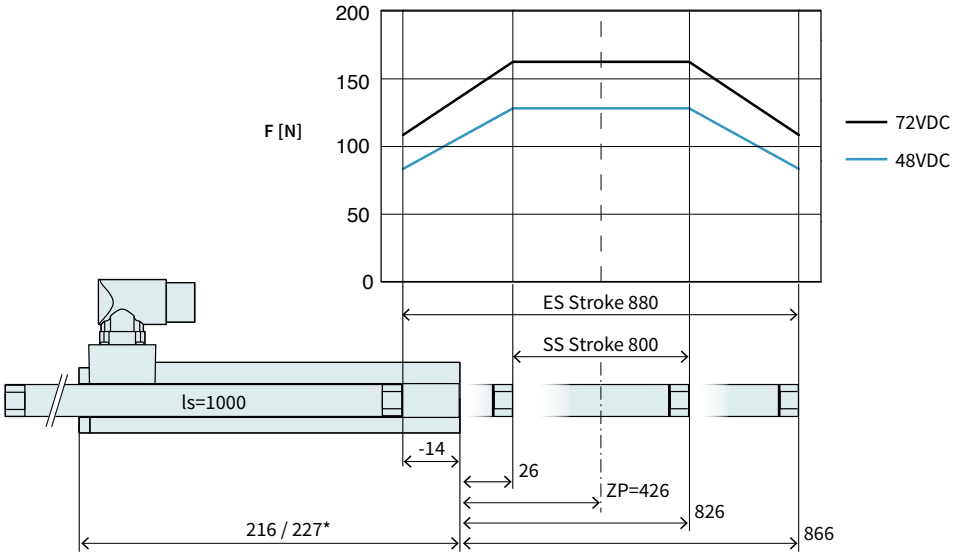

Dimensions in mm
* Cable Type

Technical Data P01-37x120/800x880-LC				
Stroke				
Standard Stroke (SS)	mm	(in)	800	(31.49)
Extended Stroke (ES)	mm	(in)	880	(34.6)
Force				
Max. Force @ 48VDC	N	(lbf)	128	(28.7)
Max. Force @ 72VDC	N	(lbf)	163	(36.7)
Max. Cont. Force [Passive cooling/ Fan / Fluid]	N	(lbf)	28 / 52 / -	(6.4 / 12 / -)
Max. Border Force relative	%		67	
Force Constant	N/A_{pk}	(lbf/A_{pk})	20.4	(4.59)
Velocity				
Max. Velocity @ 48VDC	m/s	(in/s)	2.2	(84.9)
Max. Velocity @ 72VDC	m/s	(in/s)	3.2	(129.9)
Position Detection				
Repeatability	mm	(in)	±0.05	(±0.002)
Linearity	%		± 0.15	
Electrical Data				
Max. Current @ 48VDC	A_{pk}		6.2	
Max. Current @ 72VDC	A_{pk}		7.9	
Max. Cont. Current [Passive cooling /Fan / Fluid]	A_{pk}		1.4 / 2.5 / -	
Thermal Data				
Max. Winding Temperature (Sensor)	°C		90	
Thermal Resistance [Passive cooling / Fan / Fluid]	°K/W		3.3 / 0.98 / -	
Thermal Time Constant [Passive cooling / Fan / Fluid]	s		1300 / 390 / -	
Mechanical Data				
Slider Length	mm	(in)	1000	(39)
Slider Mass	g	(lb)	2230	(4.91)

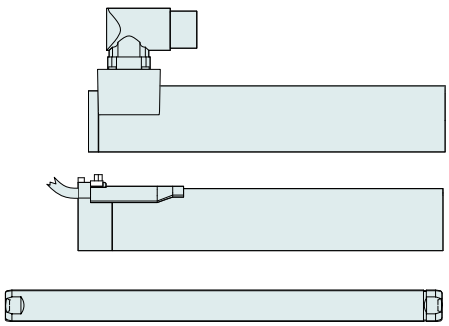

Item	Description	Item-No.
PS01-37x120-C	Stator with IP67 Connector M23/9(m)	0150-1223
PS01-37x120	Stator, 1.5m Cable, Connector P/10(m)	0150-1204
PS01-37x120-C20	Stator, 0.2m Cable, IP67 St. M23/9(m)	0150-1237
PL01-20x1000/940-LC	Slider 'standard LC'	0150-2568

P01-37x120/1000x1080-LC

Max. Stroke: 1080 mm
Peak Force: 163 N

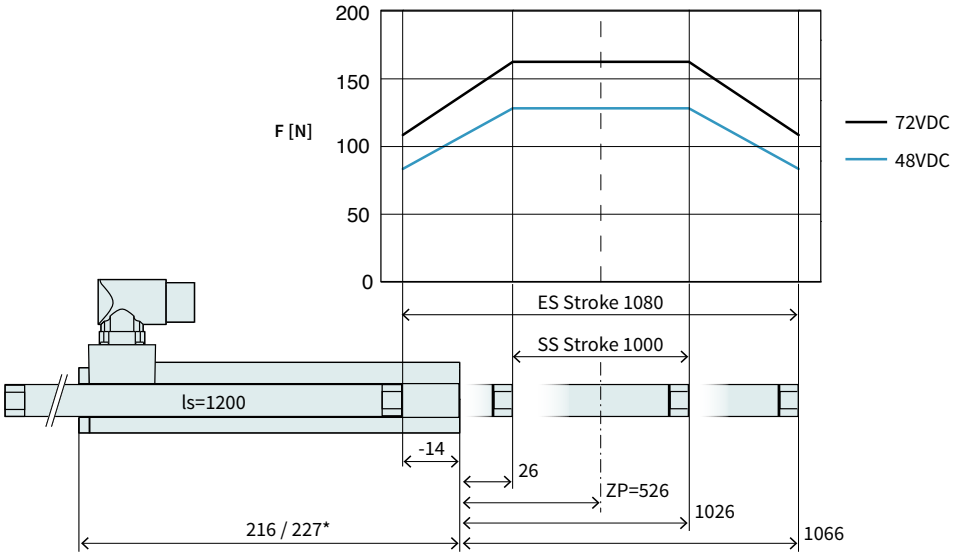

Dimensions in mm
* Cable Type

Technical Data P01-37x120/1000x1080-LC				
Stroke				
Standard Stroke (SS)	mm	(in)	1000	(39.39)
Extended Stroke (ES)	mm	(in)	1080	(42.49)
Force				
Max. Force @ 48VDC	N	(lbf)	128	(28.7)
Max. Force @ 72VDC	N	(lbf)	163	(36.7)
Max. Cont. Force [Passive cooling/ Fan / Fluid]	N	(lbf)	28 / 52 / -	(6.4 / 12 / -)
Max. Border Force relative	%		67	
Force Constant	N/A_{pk}	(lbf/A_{pk})	20.4	(4.59)
Velocity				
Max. Velocity @ 48VDC	m/s	(in/s)	2.2	(84.9)
Max. Velocity @ 72VDC	m/s	(in/s)	3.2	(129.9)
Position Detection				
Repeatability	mm	(in)	±0.05	(±0.002)
Linearity	%		± 0.15	
Electrical Data				
Max. Current @ 48VDC	A_{pk}		6.2	
Max. Current @ 72VDC	A_{pk}		7.9	
Max. Cont. Current [Passive cooling /Fan / Fluid]	A_{pk}		1.4 / 2.5 / -	
Thermal Data				
Max. Winding Temperature (Sensor)	°C		90	
Thermal Resistance [Passive cooling / Fan / Fluid]	°K/W		3.3 / 0.98 / -	
Thermal Time Constant [Passive cooling / Fan / Fluid]	s		1300 / 390 / -	
Mechanical Data				
Slider Length	mm	(in)	1200	(47)
Slider Mass	g	(lb)	2690	(5.92)

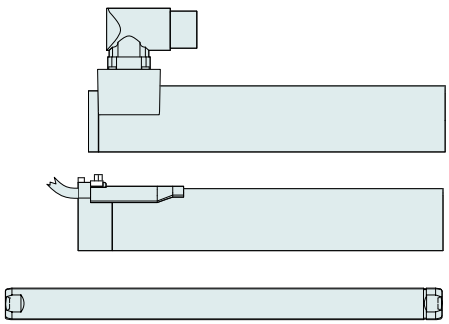

Item	Description	Item-No.
PS01-37x120-C	Stator with IP67 Connector M23/9(m)	0150-1223
PS01-37x120	Stator, 1.5m Cable, Connector P/10(m)	0150-1204
PS01-37x120-C20	Stator, 0.2m Cable, IP67 St. M23/9(m)	0150-1237
PL01-20x1200/1140-LC	Slider 'standard LC'	0150-2569

3

P01-37x120/1200x1280-LC

Max. Stroke: 1280 mm
Peak Force: 163 N

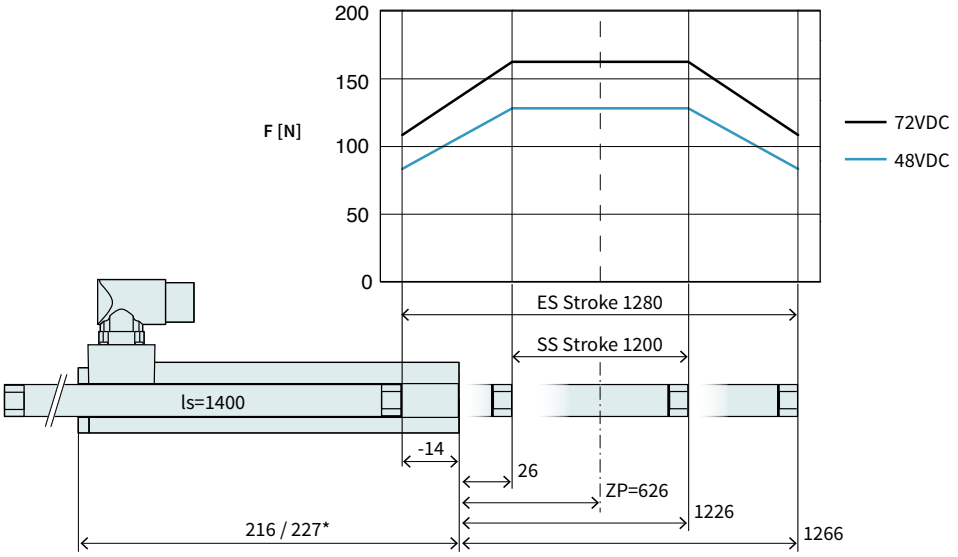

Dimensions in mm
* Cable Type

Technical Data P01-37x120/1200x1280-LC				
Stroke				
Standard Stroke (SS)	mm	(in)	1200	(47.2)
Extended Stroke (ES)	mm	(in)	1280	(50.39)
Force				
Max. Force @ 48VDC	N	(lbf)	128	(28.7)
Max. Force @ 72VDC	N	(lbf)	163	(36.7)
Max. Cont. Force [Passive cooling/ Fan / Fluid]	N	(lbf)	28 / 52 / -	(6.4 / 12 / -)
Max. Border Force relative	%		67	
Force Constant	N/A_{pk}	(lbf/A_{pk})	20.4	(4.59)
Velocity				
Max. Velocity @ 48VDC	m/s	(in/s)	2.2	(84.9)
Max. Velocity @ 72VDC	m/s	(in/s)	3.2	(129.9)
Position Detection				
Repeatability	mm	(in)	±0.05	(±0.002)
Linearity	%		± 0.15	
Electrical Data				
Max. Current @ 48VDC	A_{pk}		6.2	
Max. Current @ 72VDC	A_{pk}		7.9	
Max. Cont. Current [Passive cooling /Fan / Fluid]	A_{pk}		1.4 / 2.5 / -	
Thermal Data				
Max. Winding Temperature (Sensor)	°C		90	
Thermal Resistance [Passive cooling / Fan / Fluid]	°K/W		3.3 / 0.98 / -	
Thermal Time Constant [Passive cooling / Fan / Fluid]	s		1300 / 390 / -	
Mechanical Data				
Slider Length	mm	(in)	1400	(55)
Slider Mass	g	(lb)	3160	(6.95)

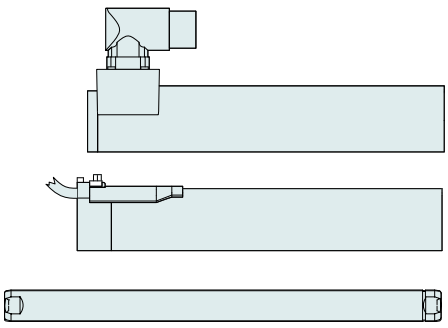

Item	Description	Item-No.
PS01-37x120-C	Stator with IP67 Connector M23/9(m)	0150-1223
PS01-37x120	Stator, 1.5m Cable, Connector P/10(m)	0150-1204
PS01-37x120-C20	Stator, 0.2m Cable, IP67 St. M23/9(m)	0150-1237
PL01-20x1400/1340-LC	Slider 'standard LC'	0150-2570

P01-37x120/1400x1480-LC

Max. Stroke: 1480 mm
Peak Force: 163 N

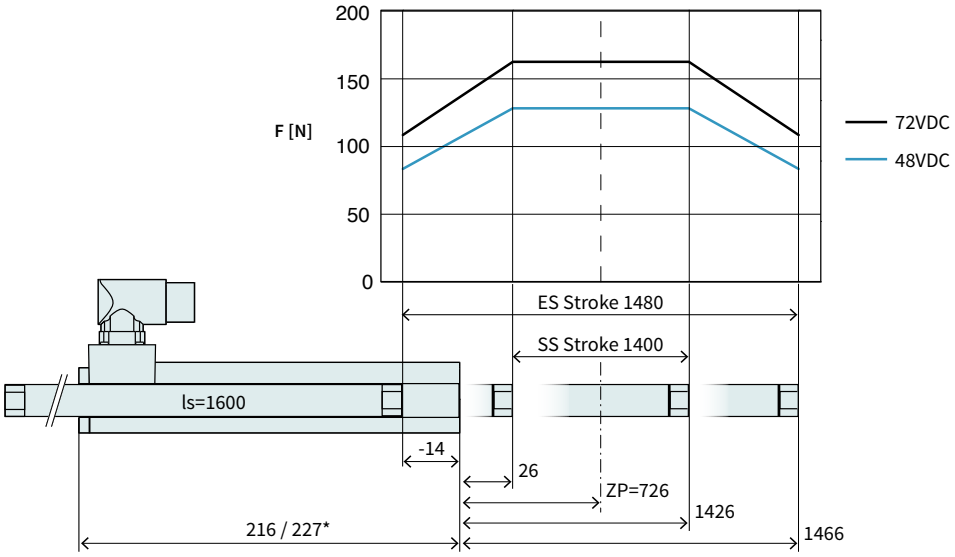

Dimensions in mm
* Cable Type

Technical Data P01-37x120/1400x1480-LC				
Stroke				
Standard Stroke (SS)	mm	(in)	1400	(55.1)
Extended Stroke (ES)	mm	(in)	1480	(58.29)
Force				
Max. Force @ 48VDC	N	(lbf)	128	(28.7)
Max. Force @ 72VDC	N	(lbf)	163	(36.7)
Max. Cont. Force [Passive cooling/ Fan / Fluid]	N	(lbf)	28 / 52 / -	(6.4 / 12 / -)
Max. Border Force relative	%		67	
Force Constant	N/A_{pk}	(lbf/A_{pk})	20.4	(4.59)
Velocity				
Max. Velocity @ 48VDC	m/s	(in/s)	2.2	(84.9)
Max. Velocity @ 72VDC	m/s	(in/s)	3.2	(129.9)
Position Detection				
Repeatability	mm	(in)	±0.05	(±0.002)
Linearity	%		± 0.15	
Electrical Data				
Max. Current @ 48VDC	A_{pk}		6.2	
Max. Current @ 72VDC	A_{pk}		7.9	
Max. Cont. Current [Passive cooling /Fan / Fluid]	A_{pk}		1.4 / 2.5 / -	
Thermal Data				
Max. Winding Temperature (Sensor)	°C		90	
Thermal Resistance [Passive cooling / Fan / Fluid]	°K/W		3.3 / 0.98 / -	
Thermal Time Constant [Passive cooling / Fan / Fluid]	s		1300 / 390 / -	
Mechanical Data				
Slider Length	mm	(in)	1600	(63)
Slider Mass	g	(lb)	3620	(8.0)

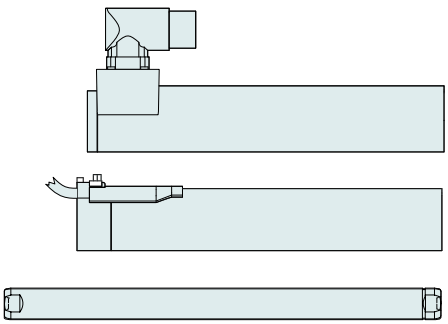

Item	Description	Item-No.
PS01-37x120-C	Stator with IP67 Connector M23/9(m)	0150-1223
PS01-37x120	Stator, 1.5m Cable, Connector P/10(m)	0150-1204
PS01-37x120-C20	Stator, 0.2m Cable, IP67 St. M23/9(m)	0150-1237
PL01-20x1600/1540-LC	Slider 'standard LC'	0150-2571

Linear Guides H01



HM01-37x120/80	Linear Module 37x120 with 80 mm Stroke		
H-Guide	H01-37x166/80	H-Guide for P01-37x120, Stroke max 80mm	0150-5020
	H01-37x166/80-GF	H-Guide for P01-37x120, Stroke max 80mm	0150-5080
Stator	PS01-37x120-C	Stator with IP67 Connector M23/9(m)	0150-1223
	PS01-37x120-C20	Stator, 0.2m Cable, IP67 St. M23/9(m)	0150-1237
	PS01-37x120	Stator, 1.5m Cable, Connector P/10(m)	0150-1204
Slider	PL01-20x300/240-LC	Slider 'standard LC'	0150-2561

HM01-37x120/180	Linear Module 37x120 with 180 mm Stroke		
H-Guide	H01-37x166/180	H-Guide for P01-37x120, Stroke max. 180 mm	0150-5021
	H01-37x166/180-GF	H=Guide for P01-37x120, Stroke max. 180 mm	0150-5081
Stator	PS01-37x120-C	Stator with IP67 Connector M23/9(m)	0150-1223
	PS01-37x120-C20	Stator, 0.2m Cable, IP67 St. M23/9(m)	0150-1237
	PS01-37x120	Stator, 1.5m Cable, Connector P/10(m)	0150-1204
Slider	PL01-20x400/340-LC	Slider 'standard LC'	0150-2562

HM01-37x120/280	Linear Module 37x120 with 280 mm Stroke		
H-Guide	H01-37x166/280	H-Guide for P01-37x120, Stroke max. 280 mm	0150-5022
	H01-37x166/280-GF	H-Guide for P01-37x120, Stroke max. 280 mm	0150-5082
Stator	PS01-37x120-C	Stator with IP67 Connector M23/9(m)	0150-1223
	PS01-37x120-C20	Stator, 0.2m Cable, IP67 St. M23/9(m)	0150-1237
	PS01-37x120	Stator, 1.5m Cable, Connector P/10(m)	0150-1204
Slider	PL01-20x500/440-LC	Slider 'standard LC'	0150-2563

Accessories			
Brake	HB01-37	Pneumatic brake for H01-37 guides	0150-5052
Fan	HV01-37/48	Fan cooling for H01-37/48 &PF02-37/48	0150-5051
MagSpring	MF01-37/H37	Flange MagSpring 37 / H-Guide 23/37/48	0250-2307
	MA01-37/H37	Adapter MagSpring 37&20 / H-Guide 37	0250-0117
Centering sleeve	HC01-09/04	Centering sleeve D9x4 mm	0150-3251
Wipers	HA01-27/20-F	Wiper for H01-37 guides, front side	0150-5108

FIND MORE PRODUCT DETAILS IN THE CHAPTER "LINEAR GUIDES".

Bridge Guide B01



BM01-37x120/160	**Bridge Module 37x120 with 160 mm Stroke [1)]**			
	B-Guide	B01-37x166/160	B-Guide for P01-37x120, Stroke max 160 mm	0150-5138
		B01-37x166/160-GF	B-Guide for P01-37x120, Stroke max 160 mm	0150-5141
	Stator	PS01-37x120-C	Stator with IP67 connector M23/9(m)	0150-1223
		PS01-37x120-C20	Linearmotor Stator, 0.2m Cable, Connector C - IP67	0150-1237
		PS01-37x120	Linearmotor Stator, 1.5m Cable, Connector P	0150-1204
	Slider	PL01-19x395/320	High Clearance Slider for B01-37x166/160	0150-1452
BM01-37x120/260	**Bridge Module 37x120 with 260 mm Stroke [1)]**			
	B-Guide	B01-37x166/260	B-Guide for P01-37x120, Stroke max 260 mm	0150-5139
		B01-37x166/260-GF	B-Guide for P01-37x120, Stroke max 260 mm	0150-5142
	Stator	PS01-37x120-C	Stator with IP67 connector M23/9(m)	0150-1223
		PS01-37x120-C20	Linearmotor Stator, 0.2m Cable, Connector C - IP67	0150-1237
		PS01-37x120	Linearmotor Stator, 1.5m Cable, Connector P	0150-1204
	Slider	PL01-19x500/420	High Clearance Slider for B01-37x166/260	0150-1455
BM01-37x120/360	**Bridge Module 37x120 with 360 mm Stroke [1)]**			
	B-Guide	B01-37x166/360	B-Guide for P01-37x120, Stroke max 360 mm	0150-5140
		B01-37x166/360-GF	B-Guide for P01-37x120, Stroke max 360 mm	0150-5143
	Stator	PS01-37x120-C	Stator with IP67 connector M23/9(m)	0150-1223
		PS01-37x120-C20	Linearmotor Stator, 0.2m Cable, Connector C - IP67	0150-1237
		PS01-37x120	Linearmotor Stator, 1.5m Cable, Connector P	0150-1204
	Slider	PL01-19x600/520	High Clearance Slider for B01-37x166/260	0150-1456

Accessories				
	Brake	HB01-37	Pneumatic Brake for H01-37/600N (4-6Bar)	0150-5052
	Fan	HV01-37/48	Fan cooling for H01-37/48 &PF02-37/48	0150-5051
	MagSpring	MF01-37/H37	Flange MagSpring 37 / H-Guide 23/37/48	0250-2307
		MA01-37/H37	Adapter MagSpring 37&20 / H-Guide 37	0250-0117
	Centering sleeve	HC01-09/04	Centering sleeve D9x4 mm	0150-3251
	Wipers	HA01-37/19-F	Wiper for H01-37 guides, front side	0150-5177

[1)] The stroke is reduced by 18 mm when using cable models.

FIND MORE PRODUCT DETAILS IN THE CHAPTER "LINEAR GUIDES".

Motor Cable

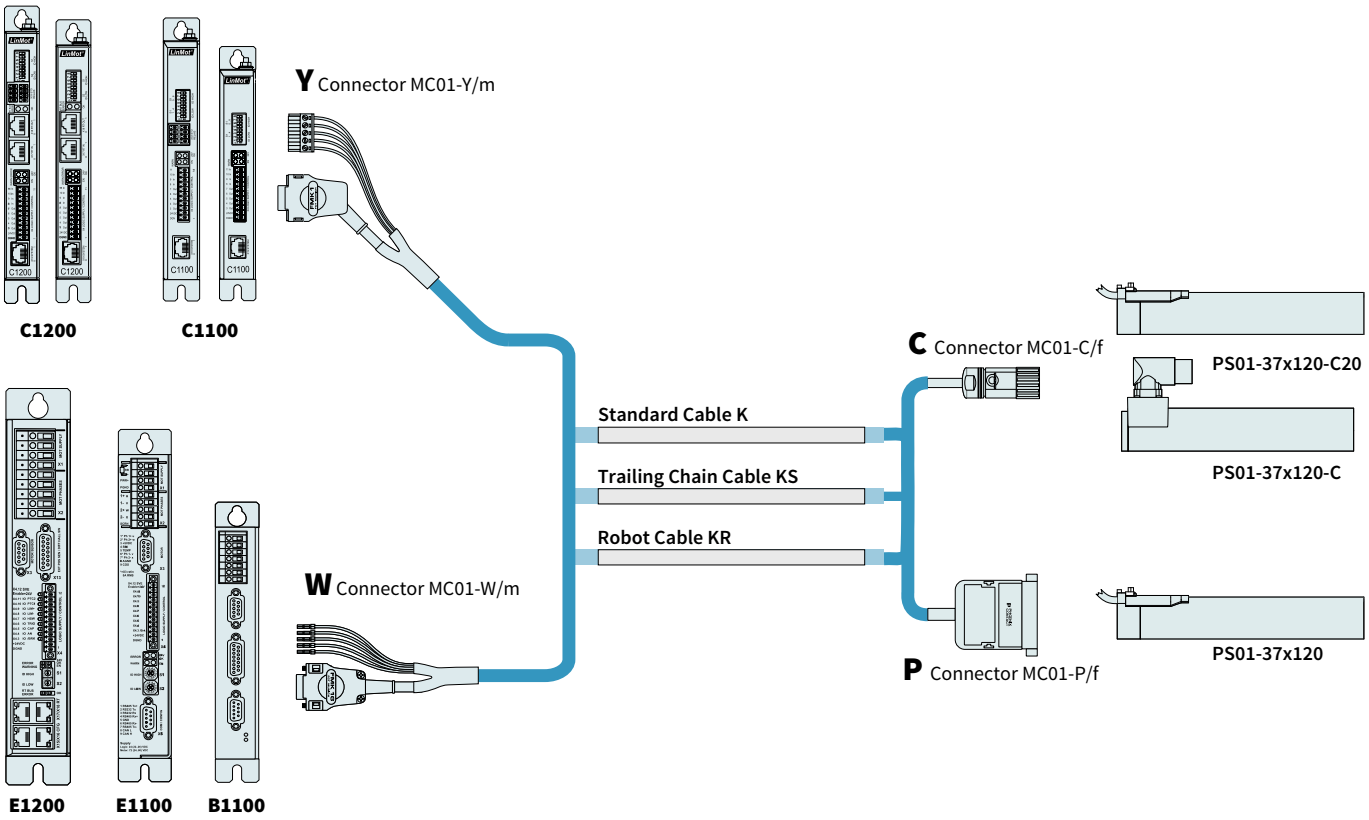

ORDERING INFORMATION

STANDARD CABLE		
Item	**Description**	**Item-No.**
K05-W/C-2	Motor Cable W/C, 2 m	0150-2123
K05-W/C-4	Motor Cable W/C, 4 m	0150-2124
K05-W/C-6	Motor Cable W/C, 6 m	0150-2125
K05-W/C-8	Motor Cable W/C, 8 m	0150-2126
K05-W/C-	Motor Cable W/C, Custom length	0150-3263
K05-W/P	Motor Cable W/P, Custom length	0150-3113
K05-Y/C-2	Motor Cable Y/R, 2 m	0150-2425
K05-Y/C-4	Motor Cable Y/R, 4 m	0150-2426
K05-Y/C-6	Motor Cable Y/R, 6 m	0150-2427
K05-Y/C-8	Motor Cable Y/R, 8 m	0150-2428
K05-Y-Fe/C-	Motor Cable Y-Fe/R, Custom length	0150-3502

TRAILING CHAIN CABLE		
Item	**Description**	**Item-No.**
KS05-W/C-4	Trailing Chain Cable W/C, 4 m	0150-2127
KS05-W/C-6	Trailing Chain Cable W/C, 6 m	0150-2128
KS05-W/C-8	Trailing Chain Cable W/C, 8 m	0150-2129
KS05-W/C-	Trailing Chain Cable W/C, Custom length	0150-3204
KS05-W/P-	Trailing Chain Cable W/P, Custom length	0150-3114
KS05-Y/C-4	Trailing Chain Cable Y/C, 4 m	0150-2436
KS05-Y/C-6	Trailing Chain Cable Y/C, 6 m	0150-2437
KS05-Y/C-8	Trailing Chain Cable Y/C, 8 m	0150-2438
KS05-Y-Fe/C-	Trailing Chain Cable Y-Fe/C, Custom length	0150-3508

ROBOT CABLE		
Item	**Description**	**Item-No.**
KR05-W/C-	Robot Cable KR05-W/C, Custom length	0150-3644
KR05-Y-Fe/C-	Robot Cable KR05-Y-Fe/C, Custom length	0150-3513

CONNECTOR & CABLE (INDIVIDUAL)		
Item	**Description**	**Item-No.**
MC01-W/m	Motor Connector W/m	0150-3140
MC01-Y-Fe/m	Motor Connector Y-Fe/m	0150-3289
MC01-C/f	Motor Connector C/f	0150-3080
MC01-P/f	Motor Connector P/f	0150-3021
K05-04/05	Motor Cable per m	0150-1920
KS05-04/05	Trailing Chain Cable per m	0150-1938
KR05-04/05	Robot Cable per m	0150-1846

MOTOR FLANGES



Item	Description	Item-No.
PF02-37x100	Flange 37x100 mm	0150-1998
PF02-37x140	Flange 37x140 mm	0150-2105

FIND MORE PRODUCT DETAILS IN THE CHAPTER "ACCESSORIES".

FANS



Item	Description	Item-No.
HV01-37/48	Fan cooling for H01-37/48 &PF02-37/48	0150-5051

FIND MORE PRODUCT DETAILS IN THE CHAPTER "ACCESSORIES".

SLIDER MOUNTING





Item	Description	Item-No.
PLF01-20	Fixed Bearing Set for 19mm and 20mm Slider	0150-3083
PLF01-20-SS	Fixed Bearing Set for 19mm and 20mm Slider, Stainless steel	0150-3296
PLL01-19	Floating Bearing for PL01-19 Slider	0150-3335
PLL01-20	Floating Bearing for PL01-20 Slider	0150-3084
PLM01-20-MK	Mounting Kit for PL01-20 Slider	0150-3079

FIND MORE PRODUCT DETAILS IN THE CHAPTER "ACCESSORIES".

WIPERS



Item	Description	Item-No.
PA01-37/19-F	Wiper front side for PS01-37x...	0150-3225
PA01-37/19-R	Wiper back side for PS01-37x...-C	0150-3226
PA01-37/19-R cable	Wiper back side for PS01-37-Cable Type	0150-3227
PA01-37/20-F	Wiper front side for PS01-37x...	0150-3126
PA01-37/20-R	Wiper front side for PS01-37x...	0150-3201
PA01-37/20-R cable	Wiper back side for PS01-37-Cable Type	0150-3221

FIND MORE PRODUCT DETAILS IN THE CHAPTER "ACCESSORIES".

EXTERNAL POSITION SENSORS



Item	Description	Item-No.
MS01-1/D	Linear Encoder 1µm, A/B (for incremental strip)	0150-1840
MB01-1000	Magnetic incremental strip for MS01-1/D, per cm	0150-1963
KS025-D/D-Encoder	Encoder Cable (Length in m)	0150-3166
KS025-D/D15-Encoder	Encoder Cable (Length in m)	0150-3168

FIND MORE PRODUCT DETAILS IN THE CHAPTER "ACCESSORIES".



Item	Description	Item-No.
MS01-1/D-SSI	Linear Encoder 1µm, A/B (for absolute strip)	0150-2095
MB01-1000-ABS	Magnetic absolute strip for MS01-1/D-SSI (per cm)	0150-2096
EC01-ABS/ENC-12-S	MS01-1/D-SSI Encoder connector straight	0150-3616
KSS01-12-D15/ABS-ENC	Special cable for MS01-1/D-SSI on C1100/C1200/C1400/E1200/E1400 Drives	0150-3652

FIND MORE PRODUCT DETAILS IN THE CHAPTER "ACCESSORIES".

LINEAR MOTORS P01-37x120F-HP



- Higher maximum peak force and acceleration
- Increased continuous force and acceleration
- Higher permissible operating temperatures with less self-heating
- Wide range of applications in handling modules as well as in plant and machine construction

LINEAR MOTORS P01-37x120F-HP

Technical Data ____ **223**

Motor Specifications

P01-37x120F/40x120-HP **227**

P01-37x120F/100x180-HP **228**

P01-37x120F/160x240-HP **229**

P01-37x120F/200x280-HP **230**

P01-37x120F/300x380-HP **231**

P01-37x120F/400x480-HP **232**

P01-37x120F/500x580-HP **233**

P01-37x120F/600x680-HP **234**

P01-37x120F/700x780-HP **235**

P01-37x120F/800x880-HP **236**

P01-37x120F/1000x1080-HP **237**

P01-37x120F/1200x1280-HP **238**

P01-37x120F/1400x1480-HP **239**

Linear Guides ____ **240**

Accessories ____ **242**



MOTOR FAMILY P01-37x120F-HP

Technical Data				
Stroke				
Standard Stroke (SS)	mm	(in)	≤ 1400	(≤ 55.1)
Extended Stroke (ES)	mm	(in)	≤ 1480	(≤ 58.3)
Force				
Max. Force @ 48VDC	N	(lbf)	255	(57.3)
Max. Force @ 72VDC	N	(lbf)	255	(57.3)
Max. Cont. Force [Passive cooling/ Fan / Fluid]	N	(lbf)	48 / 87 / -	(11 / 20 / -)
Max. Border Force relative	%		≤ 67	
Force Constant	N/A_{pk}	(lbf/A_{pk})	17	(3.82)
Velocity				
Max. Velocity @ 48VDC	m/s	(in/s)	2.5	(99.9)
Max. Velocity @ 72VDC	m/s	(in/s)	3.8	(149.9)
Position Detection				
Position Resolution	mm	(in)	0.005	(0.0002)
Repeatability	mm	(in)	±0.05	(±0.002)
Position Resolution with ES	mm	(in)	0.001	(0.00004)
Repeatability with ES	mm	(in)	±0.01	(±0.0004)
Linearity with ES	mm	(in)	±0.01	(±0.0004)
Electrical Data				
Max. Current @ 48VDC	A_{pk}		14.9	
Max. Current @ 72VDC	A_{pk}		14.9	
Max. Cont. Current [Passive cooling /Fan / Fluid]	A_{pk}		2.8 / 5.1 / -	
Terminal Resistance 25 °C / 120 °C	Ohm		2.4 / 3.5	
Terminal Inductivity	mH		1.6	
Magnetic Period	mm	(in)	40	(1.57)
Thermal Data				
Max. Winding Temperature (Sensor)	°C		120	
Thermal Resistance [Passive cooling / Fan / Fluid]	°K/W		2.9 / 0.88 / -	
Thermal Time Constant [Passive cooling / Fan / Fluid]	s		1200 / 350 / -	
Mechanical Data				
Stator Diameter	mm	(in)	37	(1.5)
Stator Length [Connector type / Cable type]	mm	(in)	216 / 227	(8.5 / 8.9)
Stator Mass	g	(lb)	740	(1.63)
Slider Diameter	mm	(in)	20	(0.79)
Slider Length	mm	(in)	240 - 1600	(9.4 - 63)
Slider Mass	g	(lb)	490 - 3620	(1.08 - 7.96)
IP Code			IP 65	

STATOR CONNECTOR TYPE

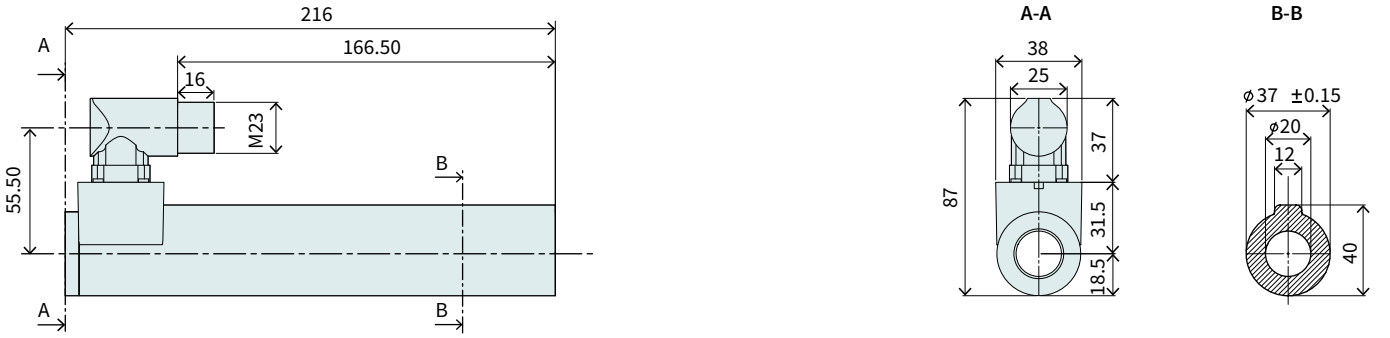

Item	Description	Item-No.
PS01-37x120F-HP-C	Stator HP with IP67 Connector M23/9(m)	0150-1251

STATOR CABLE TYPE

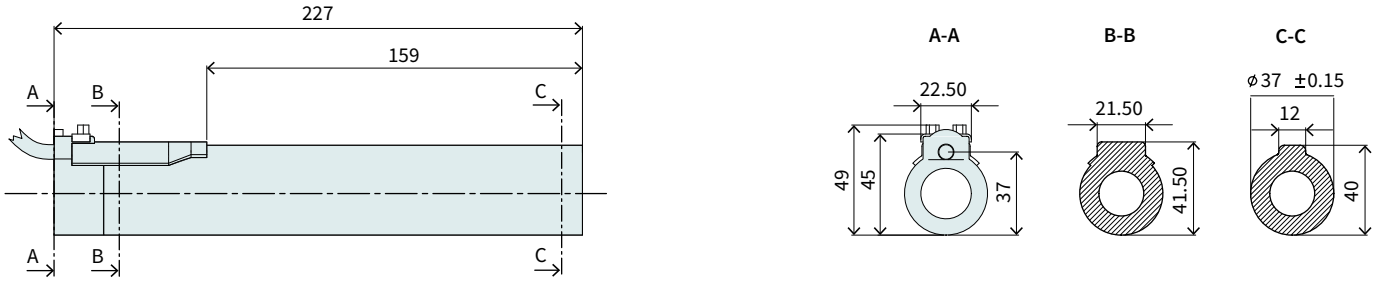

Item	Description	Item-No.
PS01-37x120F-HP-C20	Stator HP, 0.2 m Cable, IP67 St. M23/9(m)	0150-1252

CONNECTOR

Motor Connector Wiring	PS01-37x120F-HP-C PS01-37x120F-HP-C20 C-Connector	Wire color motor cable
Ph 1+	A	red
Ph 1-	B	pink
Ph 2+	C	blue
Ph 2-	D	grey
+5VDC	E	white
GND	F	inner shield
Sin	G	yellow
Cos	H	green
Temp.	L	black
Shield	Housing	outer Shield

C-Connector

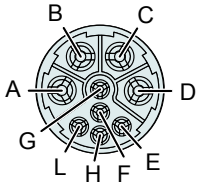

View: Motor Connector, plug side

SLIDER

Slider HP/ Heavy Duty HP

Number of grooves determines the slider type
(see chapter 2 / slider) and marks the front end.

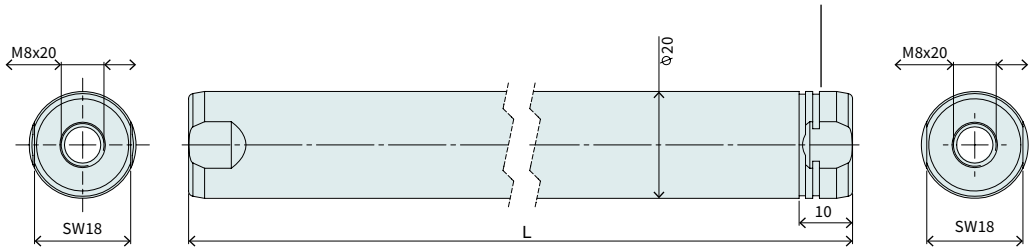

Hollow slider

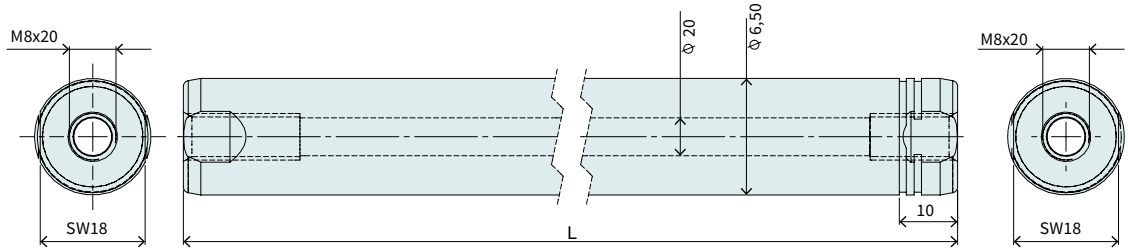

High-Clearance Slider

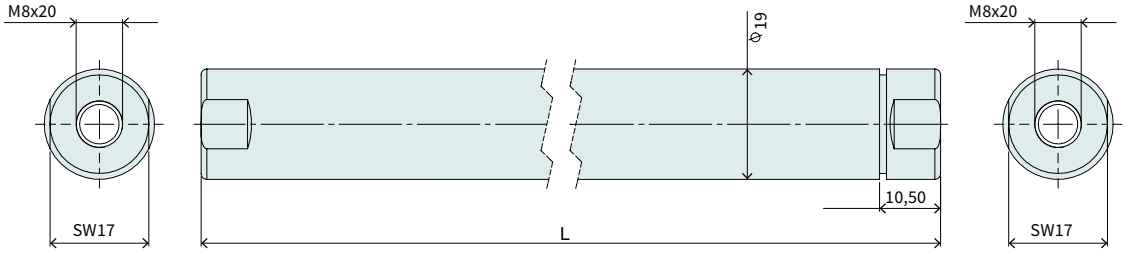

Slider HP				
Item	**Description**	**Max. Stroke [mm]**	**Standard Stroke [mm]**	**Item-No.**
PL01-20x240/180-HP	Slider 'High Performance'	120	40	0150-1505
PL01-20x300/240-HP	Slider 'High Performance'	180	100	0150-1506
PL01-20x360/300-HP	Slider 'High Performance'	240	160	0150-1507
PL01-20x400/340-HP	Slider 'High Performance'	280	200	0150-1508
PL01-20x500/440-HP	Slider 'High Performance'	380	300	0150-1509
PL01-20x600/540-HP	Slider 'High Performance'	480	400	0150-1510
PL01-20x700/640-HP	Slider 'High Performance'	580	500	0150-1511
PL01-20x800/740-HP	Slider 'High Performance'	680	600	0150-1512
PL01-20x900/840-HP	Slider 'High Performance'	780	700	0150-1513
PL01-20x1000/940-HP	Slider 'High Performance'	880	800	0150-1514
PL01-20x1200/1140-HP	Slider 'High Performance'	1080	1000	0150-1515
PL01-20x1400/1340-HP	Slider 'High Performance'	1280	1200	0150-1516
PL01-20x1600/1540-HP	Slider 'High Performance'	1480	1400	0150-1517

Slider Heavy Duty HP				
Item	**Description**	**Max. Stroke [mm]**	**Standard Stroke [mm]**	**Item-No.**
PL02-20x240/180-HP	Slider 'heavy duty' 'High Performace'	120	40	0150-2162
PL02-20x300/240-HP	Slider 'heavy duty' 'High Performace'	180	100	0150-2163
PL02-20x360/300-HP	Slider 'heavy duty' 'High Performace'	240	160	0150-2164
PL02-20x400/340-HP	Slider 'heavy duty' 'High Performace'	280	200	0150-2165
PL02-20x500/440-HP	Slider 'heavy duty' 'High Performace'	380	300	0150-2166
PL02-20x600/540-HP	Slider 'heavy duty' 'High Performace'	480	400	0150-2167
PL02-20x700/640-HP	Slider 'heavy duty' 'High Performace'	580	500	0150-2168
PL02-20x800/740-HP	Slider 'heavy duty' 'High Performace'	680	600	0150-2169
PL02-20x900/840-HP	Slider 'heavy duty' 'High Performace'	780	700	0150-2170

Hollow slider				
Item	Description	Max. Stroke [mm]	Standard Stroke [mm]	Item-No.
PL01-20x240/180-HP-L	Slider 'High Performance L'	120	100	0150-2540
PL01-20x300/240-HP-L	Slider 'High Performance L'	180	160	0150-3696
PL01-20x360/300-HP-L	Slider 'High Performance L'	240	220	0150-1537
PL01-20x400/340-HP-L	Slider 'High Performance L'	280	260	0150-3697
PL01-20x500/440-HP-L	Slider 'High Performance L'	380	360	0150-3698
PL01-20x600/540-HP-L	Slider 'High Performance L'	480	460	0150-3699
PL01-20x700/640-HP-L	Slider 'High Performance L'	580	560	0150-3700
PL01-20x800/740-HP-L	Slider 'High Performance L'	680	660	0150-3701
PL01-20x900/840-HP-L	Slider 'High Performance L'	780	760	0150-3702
PL01-20x1000/940-HP-L	Slider 'High Performance L'	880	860	0150-2510
PL01-20x1200/1140-HP-L	Slider 'High Performance L'	1080	1060	on request
PL01-20x1400/1340-HP-L	Slider 'High Performance L'	1280	1260	on request
PL01-20x1600/1540-HP-L	Slider 'High Performance L'	1480	1460	on request

High-Clearance Slider				
Item	Description	Max. Stroke [mm]	Standard Stroke [mm]	Item-No.
PL01-19x240/160	Slider 'high clearance'	100	80	0150-1448
PL01-19x300/220	Slider 'high clearance'	160	140	0150-1449
PL01-19x395/320	Slider 'high clearance'	260	240	0150-1452
PL01-19x500/420	Slider 'high clearance'	360	340	0150-1455
PL01-19x600/520	Slider 'high clearance'	460	440	0150-1456
PL01-19x700/620	Slider 'high clearance'	560	540	0150-1457

P01-37x120F/40x120-HP

Max. Stroke: 120 mm
Peak Force: 255 N

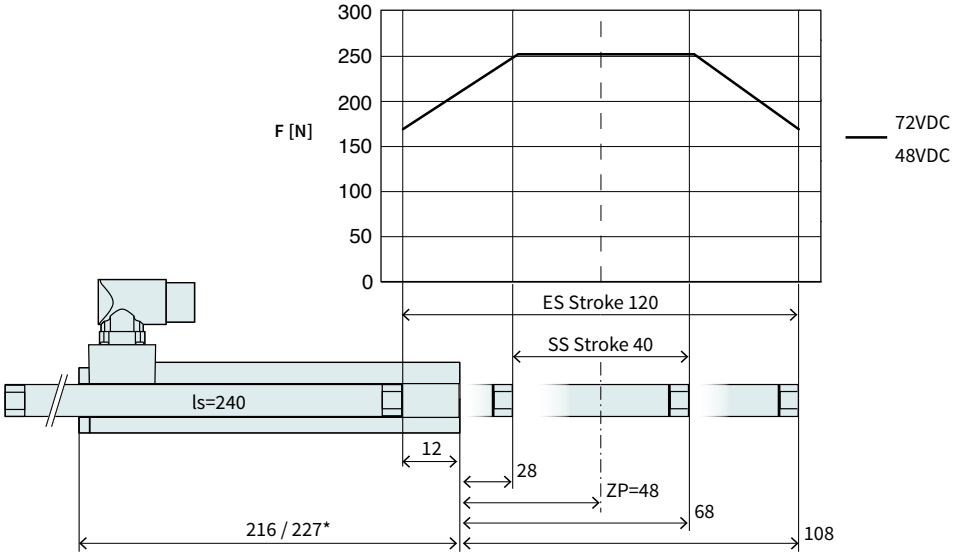

Dimensions in mm
*Cable Type

Technical Data P01-37x120F/40x120-HP				
Stroke				
Standard Stroke (SS)	mm	(in)	40	(1.57)
Extended Stroke (ES)	mm	(in)	120	(4.71)
Force				
Max. Force @ 48VDC	N	(lbf)	255	(57.3)
Max. Force @ 72VDC	N	(lbf)	255	(57.3)
Max. Cont. Force [Passive cooling/ Fan / Fluid]	N	(lbf)	48 / 87 / -	(11 / 20 / -)
Max. Border Force relative	%		67	
Force Constant	N/A_{pk}	(lbf/A_{pk})	17	(3.82)
Velocity				
Max. Velocity @ 48VDC	m/s	(in/s)	2.5	(99.9)
Max. Velocity @ 72VDC	m/s	(in/s)	3.8	(149.9)
Position Detection				
Repeatability	mm	(in)	±0.05	(±0.002)
Linearity	%		± 0.5	
Electrical Data				
Max. Current @ 48VDC	A_{pk}		14.9	
Max. Current @ 72VDC	A_{pk}		14.9	
Max. Cont. Current [Passive cooling /Fan / Fluid]	A_{pk}		2.8 / 5.1 / -	
Thermal Data				
Max. Winding Temperature (Sensor)	°C		120	
Thermal Resistance [Passive cooling / Fan / Fluid]	°K/W		2.9 / 0.88 / -	
Thermal Time Constant [Passive cooling / Fan / Fluid]	s		1200 / 350 / -	
Mechanical Data				
Slider Length	mm	(in)	240	(9.4)
Slider Mass	g	(lb)	490	(1.08)

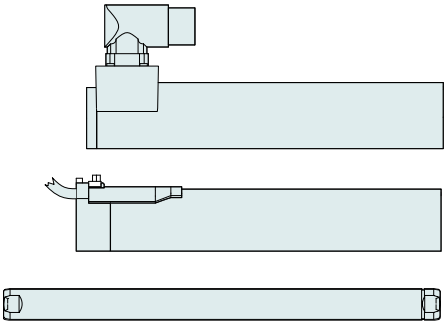

Item	Description	Item-No.
PS01-37x120F-HP-C	Stator HP with IP67 Connector M23/9(m)	0150-1251
PS01-37x120F-HP-C20	Stator HP, 0.2 m Cable, IP67 St. M23/9(m)	0150-1252
PL01-20x240/180-HP	Slider 'High Performance'	0150-1505
PL02-20x240/180-HP	Slider 'heavy duty' 'High Performace'	0150-2162
PL01-20x240/180-HP-L*	Slider 'High Performance L'	0150-2540
PL01-19x240/160*	Slider 'high clearance'	0150-1448

* With this slider, the motor specifications above change.

P01-37x120F/100x180-HP

Max. Stroke: 180 mm
Peak Force: 255 N

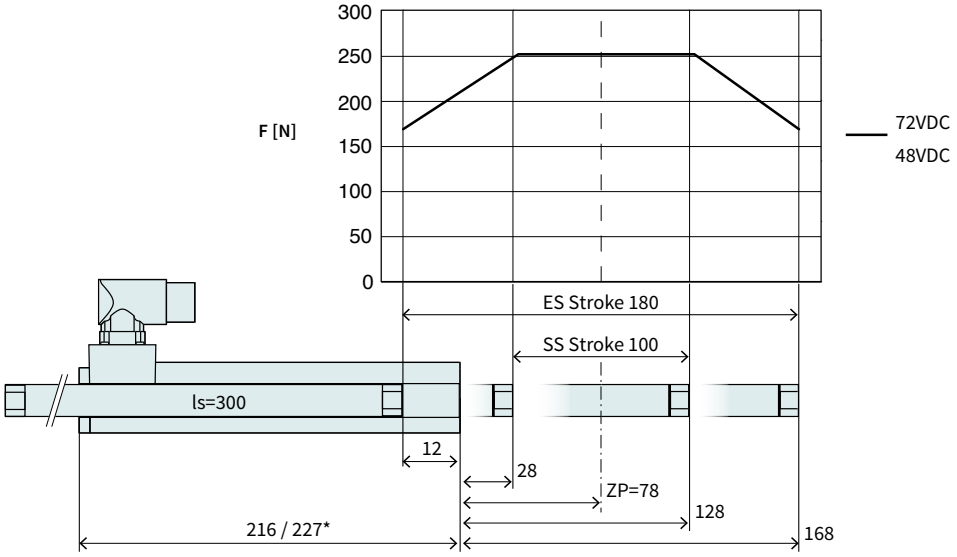

Dimensions in mm
*Cable Type

Technical Data P01-37x120F/100x180-HP				
Stroke				
Standard Stroke (SS)	mm	(in)	100	(3.93)
Extended Stroke (ES)	mm	(in)	180	(7.08)
Force				
Max. Force @ 48VDC	N	(lbf)	255	(57.3)
Max. Force @ 72VDC	N	(lbf)	255	(57.3)
Max. Cont. Force [Passive cooling/ Fan / Fluid]	N	(lbf)	48 / 87 / -	(11 / 20 / -)
Max. Border Force relative	%		67	
Force Constant	N/A_{pk}	(lbf/A_{pk})	17	(3.82)
Velocity				
Max. Velocity @ 48VDC	m/s	(in/s)	2.5	(99.9)
Max. Velocity @ 72VDC	m/s	(in/s)	3.8	(149.9)
Position Detection				
Repeatability	mm	(in)	±0.05	(±0.002)
Linearity	%		± 0.4	
Electrical Data				
Max. Current @ 48VDC	A_{pk}		14.9	
Max. Current @ 72VDC	A_{pk}		14.9	
Max. Cont. Current [Passive cooling /Fan / Fluid]	A_{pk}		2.8 / 5.1 / -	
Thermal Data				
Max. Winding Temperature (Sensor)	°C		120	
Thermal Resistance [Passive cooling / Fan / Fluid]	°K/W		2.9 / 0.88 / -	
Thermal Time Constant [Passive cooling / Fan / Fluid]	s		1200 / 350 / -	
Mechanical Data				
Slider Length	mm	(in)	300	(12)
Slider Mass	g	(lb)	630	(1.4)

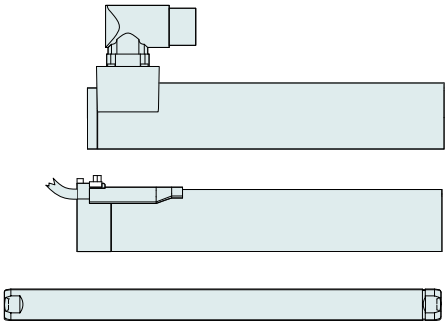

Item	Description	Item-No.
PS01-37x120F-HP-C	Stator HP with IP67 Connector M23/9(m)	0150-1251
PS01-37x120F-HP-C20	Stator HP, 0.2 m Cable, IP67 St. M23/9(m)	0150-1252
PL01-20x300/240-HP	Slider 'High Performance'	0150-1506
PL02-20x300/240-HP	Slider 'heavy duty' 'High Performace'	0150-2163
PL01-20x300/240-HP-L*	Slider 'High Performance L'	0150-3696
PL01-19x300/220*	Slider 'high clearance'	0150-1449

* With this slider, the motor specifications above change.

P01-37x120F/160x240-HP

Max. Stroke: 240 mm
Peak Force: 255 N

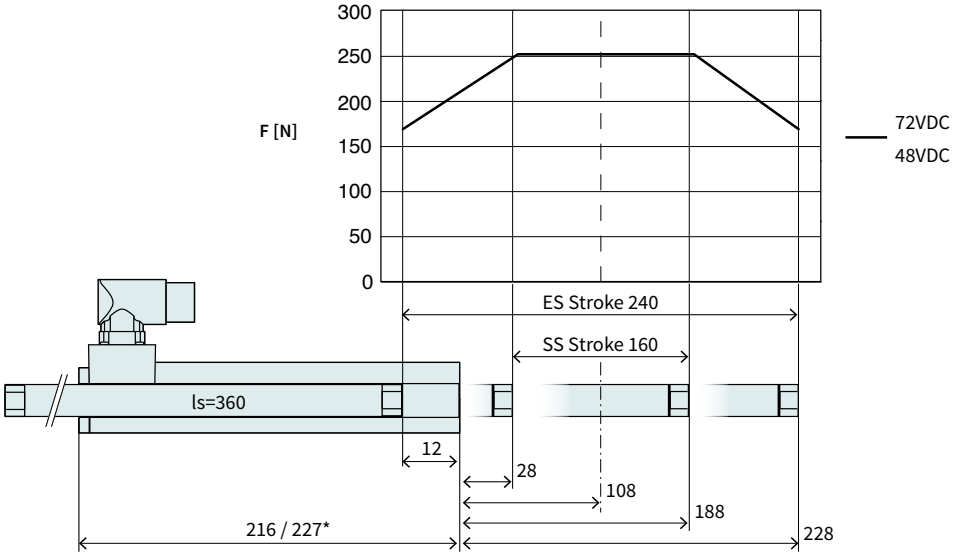

Dimensions in mm
*Cable Type

Technical Data P01-37x120F/160x240-HP				
Stroke				
Standard Stroke (SS)	mm	(in)	160	(6.29)
Extended Stroke (ES)	mm	(in)	240	(9.44)
Force				
Max. Force @ 48VDC	N	(lbf)	255	(57.3)
Max. Force @ 72VDC	N	(lbf)	255	(57.3)
Max. Cont. Force [Passive cooling/ Fan / Fluid]	N	(lbf)	48 / 87 / -	(11 / 20 / -)
Max. Border Force relative	%		67	
Force Constant	N/A_{pk}	(lbf/A_{pk})	17	(3.82)
Velocity				
Max. Velocity @ 48VDC	m/s	(in/s)	2.5	(99.9)
Max. Velocity @ 72VDC	m/s	(in/s)	3.8	(149.9)
Position Detection				
Repeatability	mm	(in)	±0.05	(±0.002)
Linearity	%		± 0.3	
Electrical Data				
Max. Current @ 48VDC	A_{pk}		14.9	
Max. Current @ 72VDC	A_{pk}		14.9	
Max. Cont. Current [Passive cooling /Fan / Fluid]	A_{pk}		2.8 / 5.1 / -	
Thermal Data				
Max. Winding Temperature (Sensor)	°C		120	
Thermal Resistance [Passive cooling / Fan / Fluid]	°K/W		2.9 / 0.88 / -	
Thermal Time Constant [Passive cooling / Fan / Fluid]	s		1200 / 350 / -	
Mechanical Data				
Slider Length	mm	(in)	360	(14)
Slider Mass	g	(lb)	760	(1.67)

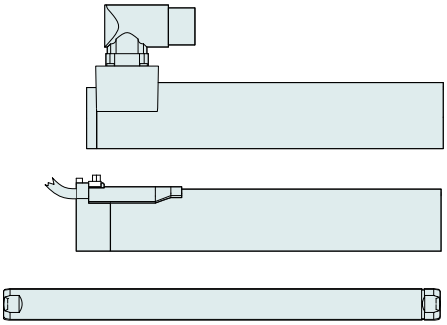

Item	Description	Item-No.
PS01-37x120F-HP-C	Stator HP with IP67 Connector M23/9(m)	0150-1251
PS01-37x120F-HP-C20	Stator HP, 0.2 m Cable, IP67 St. M23/9(m)	0150-1252
PL01-20x360/300-HP	Slider 'High Performance'	0150-1507
PL02-20x360/300-HP	Slider 'heavy duty' 'High Performace'	0150-2164
PL01-20x360/300-HP-L*	Slider 'High Performance L'	0150-1537

* With this slider, the motor specifications above change.

P01-37x120F/200x280-HP

Max. Stroke: 280 mm
Peak Force: 255 N

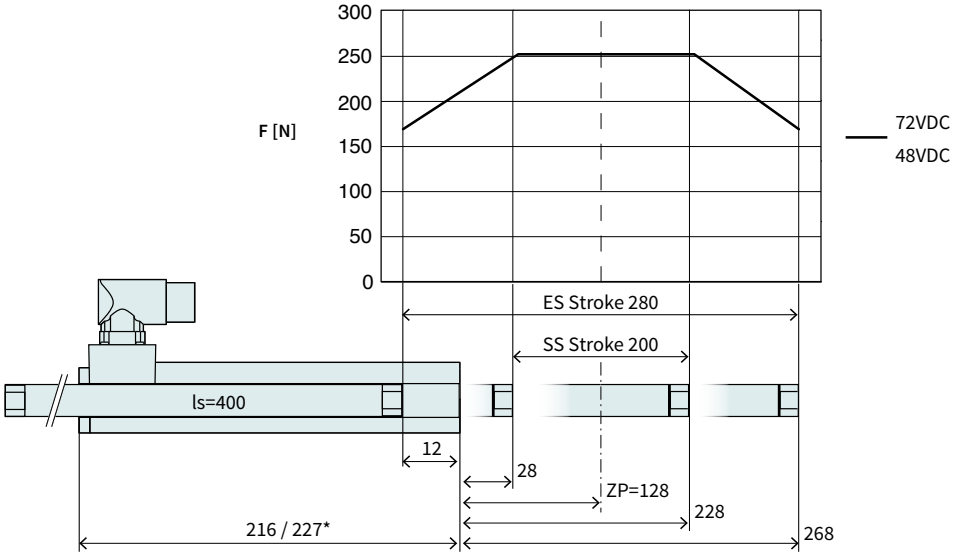

Dimensions in mm
*Cable Type

Technical Data P01-37x120F/200x280-HP				
Stroke				
Standard Stroke (SS)	mm	(in)	200	(7.86)
Extended Stroke (ES)	mm	(in)	280	(10.99)
Force				
Max. Force @ 48VDC	N	(lbf)	255	(57.3)
Max. Force @ 72VDC	N	(lbf)	255	(57.3)
Max. Cont. Force [Passive cooling/ Fan / Fluid]	N	(lbf)	48 / 87 / -	(11 / 20 / -)
Max. Border Force relative	%		67	
Force Constant	N/A_{pk}	(lbf/A_{pk})	17	(3.82)
Velocity				
Max. Velocity @ 48VDC	m/s	(in/s)	2.5	(99.9)
Max. Velocity @ 72VDC	m/s	(in/s)	3.8	(149.9)
Position Detection				
Repeatability	mm	(in)	±0.05	(±0.002)
Linearity	%		± 0.3	
Electrical Data				
Max. Current @ 48VDC	A_{pk}		14.9	
Max. Current @ 72VDC	A_{pk}		14.9	
Max. Cont. Current [Passive cooling /Fan / Fluid]	A_{pk}		2.8 / 5.1 / -	
Thermal Data				
Max. Winding Temperature (Sensor)	°C		120	
Thermal Resistance [Passive cooling / Fan / Fluid]	°K/W		2.9 / 0.88 / -	
Thermal Time Constant [Passive cooling / Fan / Fluid]	s		1200 / 350 / -	
Mechanical Data				
Slider Length	mm	(in)	400	(16)
Slider Mass	g	(lb)	860	(1.89)

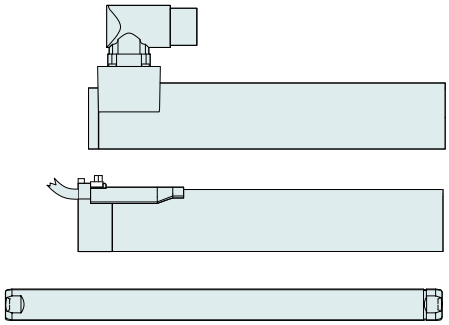

Item	Description	Item-No.
PS01-37x120F-HP-C	Stator HP with IP67 Connector M23/9(m)	0150-1251
PS01-37x120F-HP-C20	Stator HP, 0.2 m Cable, IP67 St. M23/9(m)	0150-1252
PL01-20x400/340-HP	Slider 'High Performance'	0150-1508
PL02-20x400/340-HP	Slider 'heavy duty' 'High Performace'	0150-2165
PL01-20x400/340-HP-L*	Slider 'High Performance L'	0150-3697
PL01-19x395/320*	Slider 'high clearance'	0150-1452

* With this slider, the motor specifications above change.

P01-37x120F/300x380-HP

Max. Stroke: 380 mm
Peak Force: 255 N

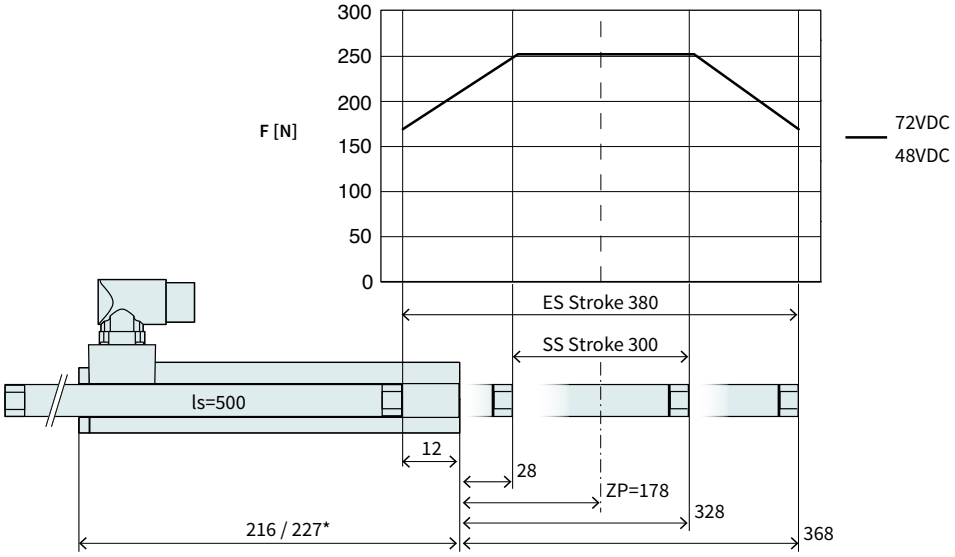

Dimensions in mm
*Cable Type

Technical Data P01-37x120F/300x380-HP				
Stroke				
Standard Stroke (SS)	mm	(in)	300	(11.8)
Extended Stroke (ES)	mm	(in)	380	(14.99)
Force				
Max. Force @ 48VDC	N	(lbf)	255	(57.3)
Max. Force @ 72VDC	N	(lbf)	255	(57.3)
Max. Cont. Force [Passive cooling/ Fan / Fluid]	N	(lbf)	48 / 87 / -	(11 / 20 / -)
Max. Border Force relative	%		67	
Force Constant	N/A_{pk}	(lbf/A_{pk})	17	(3.82)
Velocity				
Max. Velocity @ 48VDC	m/s	(in/s)	2.5	(99.9)
Max. Velocity @ 72VDC	m/s	(in/s)	3.8	(149.9)
Position Detection				
Repeatability	mm	(in)	±0.05	(±0.002)
Linearity	%		± 0.25	
Electrical Data				
Max. Current @ 48VDC	A_{pk}		14.9	
Max. Current @ 72VDC	A_{pk}		14.9	
Max. Cont. Current [Passive cooling /Fan / Fluid]	A_{pk}		2.8 / 5.1 / -	
Thermal Data				
Max. Winding Temperature (Sensor)	°C		120	
Thermal Resistance [Passive cooling / Fan / Fluid]	°K/W		2.9 / 0.88 / -	
Thermal Time Constant [Passive cooling / Fan / Fluid]	s		1200 / 350 / -	
Mechanical Data				
Slider Length	mm	(in)	500	(20)
Slider Mass	g	(lb)	1090	(2.4)

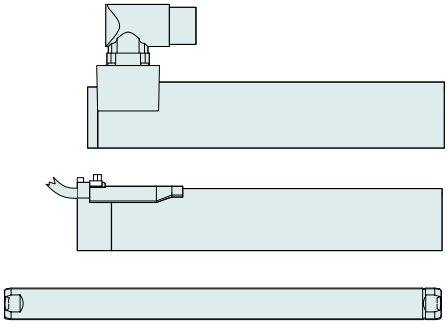

Item	Description	Item-No.
PS01-37x120F-HP-C	Stator HP with IP67 Connector M23/9(m)	0150-1251
PS01-37x120F-HP-C20	Stator HP, 0.2 m Cable, IP67 St. M23/9(m)	0150-1252
PL01-20x500/440-HP	Slider 'High Performance'	0150-1509
PL02-20x500/440-HP	Slider 'heavy duty' 'High Performace'	0150-2166
PL01-20x500/440-HP-L*	Slider 'High Performance L'	0150-3698
PL01-19x500/420*	Slider 'high clearance'	0150-1455

* With this slider, the motor specifications above change.

P01-37x120F/400x480-HP

Max. Stroke: 480 mm
Peak Force: 255 N

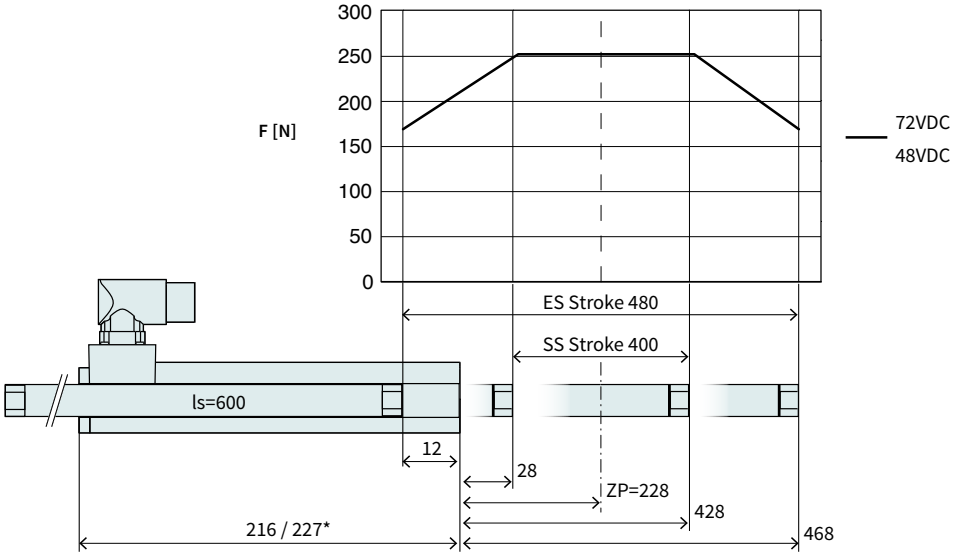

Dimensions in mm
*Cable Type

Technical Data P01-37x120F/400x480-HP				
Stroke				
Standard Stroke (SS)	mm	(in)	400	(15.69)
Extended Stroke (ES)	mm	(in)	480	(18.89)
Force				
Max. Force @ 48VDC	N	(lbf)	255	(57.3)
Max. Force @ 72VDC	N	(lbf)	255	(57.3)
Max. Cont. Force [Passive cooling/ Fan / Fluid]	N	(lbf)	48 / 87 / -	(11 / 20 / -)
Max. Border Force relative	%		67	
Force Constant	N/A_{pk}	(lbf/A_{pk})	17	(3.82)
Velocity				
Max. Velocity @ 48VDC	m/s	(in/s)	2.5	(99.9)
Max. Velocity @ 72VDC	m/s	(in/s)	3.8	(149.9)
Position Detection				
Repeatability	mm	(in)	±0.05	(±0.002)
Linearity	%		± 0.2	
Electrical Data				
Max. Current @ 48VDC	A_{pk}		14.9	
Max. Current @ 72VDC	A_{pk}		14.9	
Max. Cont. Current [Passive cooling /Fan / Fluid]	A_{pk}		2.8 / 5.1 / -	
Thermal Data				
Max. Winding Temperature (Sensor)	°C		120	
Thermal Resistance [Passive cooling / Fan / Fluid]	°K/W		2.9 / 0.88 / -	
Thermal Time Constant [Passive cooling / Fan / Fluid]	s		1200 / 350 / -	
Mechanical Data				
Slider Length	mm	(in)	600	(24)
Slider Mass	g	(lb)	1330	(2.93)

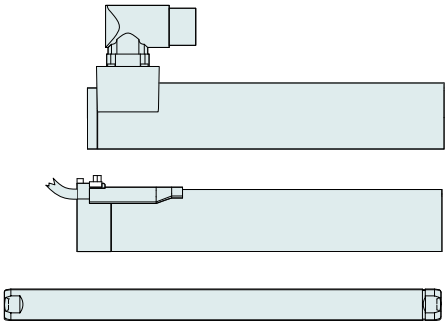

Item	Description	Item-No.
PS01-37x120F-HP-C	Stator HP with IP67 Connector M23/9(m)	0150-1251
PS01-37x120F-HP-C20	Stator HP, 0.2 m Cable, IP67 St. M23/9(m)	0150-1252
PL01-20x600/540-HP	Slider 'High Performance'	0150-1510
PL02-20x600/540-HP	Slider 'heavy duty' 'High Performace'	0150-2167
PL01-20x600/540-HP-L*	Slider 'High Performance L'	0150-3699
PL01-19x600/520*	Slider 'high clearance'	0150-1456

* With this slider, the motor specifications above change.

P01-37x120F/500x580-HP

Max. Stroke: 580 mm
Peak Force: 255 N

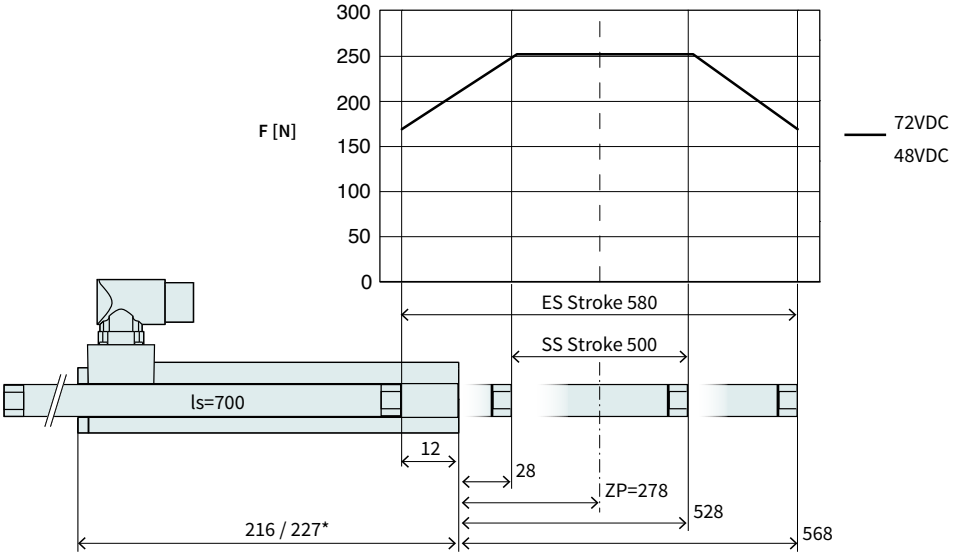

Dimensions in mm
*Cable Type

Technical Data P01-37x120F/500x580-HP				
Stroke				
Standard Stroke (SS)	mm	(in)	500	(19.69)
Extended Stroke (ES)	mm	(in)	580	(22.8)
Force				
Max. Force @ 48VDC	N	(lbf)	255	(57.3)
Max. Force @ 72VDC	N	(lbf)	255	(57.3)
Max. Cont. Force [Passive cooling/ Fan / Fluid]	N	(lbf)	48 / 87 / -	(11 / 20 / -)
Max. Border Force relative	%		67	
Force Constant	N/A_{pk}	(lbf/A_{pk})	17	(3.82)
Velocity				
Max. Velocity @ 48VDC	m/s	(in/s)	2.5	(99.9)
Max. Velocity @ 72VDC	m/s	(in/s)	3.8	(149.9)
Position Detection				
Repeatability	mm	(in)	±0.05	(±0.002)
Linearity	%		± 0.2	
Electrical Data				
Max. Current @ 48VDC	A_{pk}		14.9	
Max. Current @ 72VDC	A_{pk}		14.9	
Max. Cont. Current [Passive cooling /Fan / Fluid]	A_{pk}		2.8 / 5.1 / -	
Thermal Data				
Max. Winding Temperature (Sensor)	°C		120	
Thermal Resistance [Passive cooling / Fan / Fluid]	°K/W		2.9 / 0.88 / -	
Thermal Time Constant [Passive cooling / Fan / Fluid]	s		1200 / 350 / -	
Mechanical Data				
Slider Length	mm	(in)	700	(28)
Slider Mass	g	(lb)	1560	(3.43)

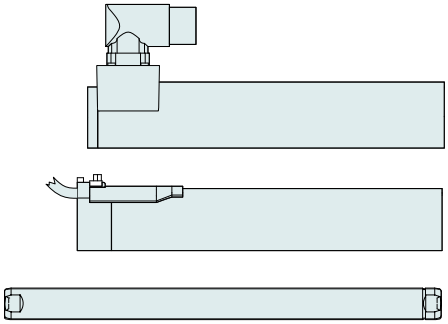

Item	Description	Item-No.
PS01-37x120F-HP-C	Stator HP with IP67 Connector M23/9(m)	0150-1251
PS01-37x120F-HP-C20	Stator HP, 0.2 m Cable, IP67 St. M23/9(m)	0150-1252
PL01-20x700/640-HP	Slider 'High Performance'	0150-1511
PL02-20x700/640-HP	Slider 'heavy duty' 'High Performace'	0150-2168
PL01-20x700/640-HP-L*	Slider 'High Performance L'	0150-3700
PL01-19x700/620*	Slider 'high clearance'	0150-1457

* With this slider, the motor specifications above change.

P01-37x120F/600x680-HP

Max. Stroke: 680 mm
Peak Force: 255 N

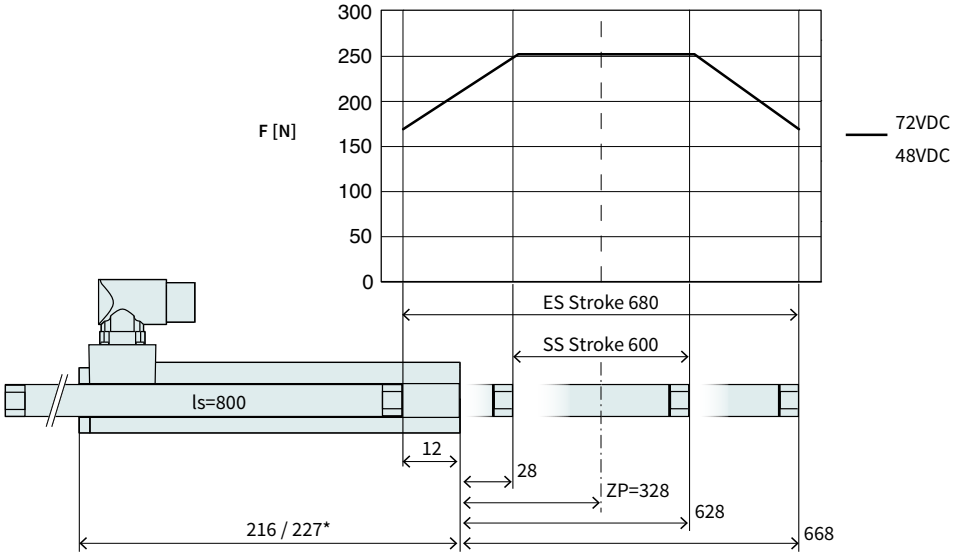

Dimensions in mm
*Cable Type

Technical Data P01-37x120F/600x680-HP				
Stroke				
Standard Stroke (SS)	mm	(in)	600	(23.6)
Extended Stroke (ES)	mm	(in)	680	(26.8)
Force				
Max. Force @ 48VDC	N	(lbf)	255	(57.3)
Max. Force @ 72VDC	N	(lbf)	255	(57.3)
Max. Cont. Force [Passive cooling/ Fan / Fluid]	N	(lbf)	48 / 87 / -	(11 / 20 / -)
Max. Border Force relative	%		67	
Force Constant	N/A_{pk}	(lbf/A_{pk})	17	(3.82)
Velocity				
Max. Velocity @ 48VDC	m/s	(in/s)	2.5	(99.9)
Max. Velocity @ 72VDC	m/s	(in/s)	3.8	(149.9)
Position Detection				
Repeatability	mm	(in)	±0.05	(±0.002)
Linearity	%		± 0.15	
Electrical Data				
Max. Current @ 48VDC	A_{pk}		14.9	
Max. Current @ 72VDC	A_{pk}		14.9	
Max. Cont. Current [Passive cooling /Fan / Fluid]	A_{pk}		2.8 / 5.1 / -	
Thermal Data				
Max. Winding Temperature (Sensor)	°C		120	
Thermal Resistance [Passive cooling / Fan / Fluid]	°K/W		2.9 / 0.88 / -	
Thermal Time Constant [Passive cooling / Fan / Fluid]	s		1200 / 350 / -	
Mechanical Data				
Slider Length	mm	(in)	800	(31)
Slider Mass	g	(lb)	1790	(3.94)

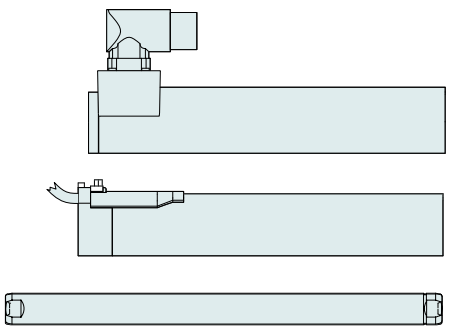

Item	Description	Item-No.
PS01-37x120F-HP-C	Stator HP with IP67 Connector M23/9(m)	0150-1251
PS01-37x120F-HP-C20	Stator HP, 0.2 m Cable, IP67 St. M23/9(m)	0150-1252
PL01-20x800/740-HP	Slider 'High Performance'	0150-1512
PL02-20x800/740-HP	Slider 'heavy duty' 'High Performace'	0150-2169
PL01-20x800/740-HP-L*	Slider 'High Performance L'	0150-3701

* With this slider, the motor specifications above change.

P01-37x120F/700x780-HP

Max. Stroke: 780 mm
Peak Force: 255 N

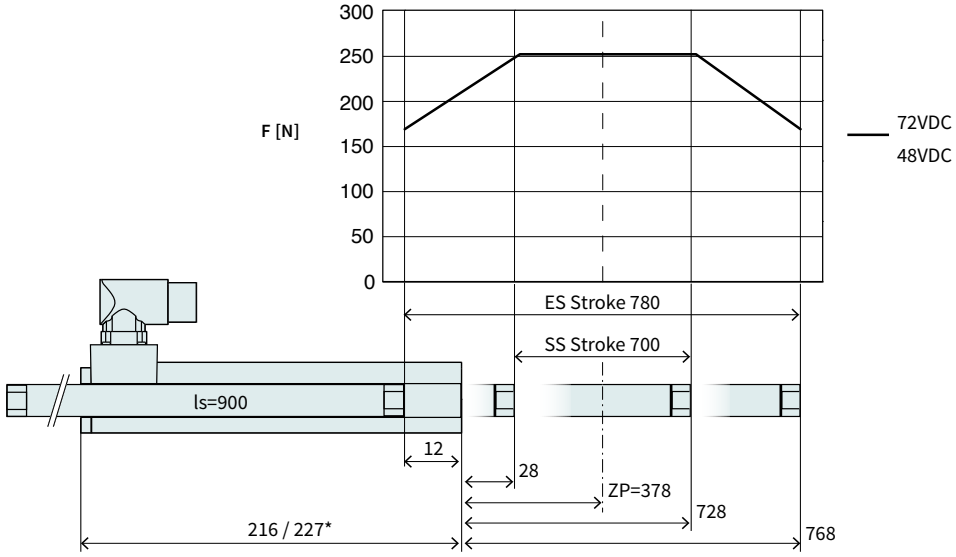

Dimensions in mm
*Cable Type

Technical Data P01-37x120F/700x780-HP				
Stroke				
Standard Stroke (SS)	mm	(in)	700	(27.6)
Extended Stroke (ES)	mm	(in)	780	(30.69)
Force				
Max. Force @ 48VDC	N	(lbf)	255	(57.3)
Max. Force @ 72VDC	N	(lbf)	255	(57.3)
Max. Cont. Force [Passive cooling/ Fan / Fluid]	N	(lbf)	48 / 87 / -	(11 / 20 / -)
Max. Border Force relative	%		67	
Force Constant	N/A_{pk}	(lbf/A_{pk})	17	(3.82)
Velocity				
Max. Velocity @ 48VDC	m/s	(in/s)	2.5	(99.9)
Max. Velocity @ 72VDC	m/s	(in/s)	3.8	(149.9)
Position Detection				
Repeatability	mm	(in)	±0.05	(±0.002)
Linearity	%		± 0.15	
Electrical Data				
Max. Current @ 48VDC	A_{pk}		14.9	
Max. Current @ 72VDC	A_{pk}		14.9	
Max. Cont. Current [Passive cooling /Fan / Fluid]	A_{pk}		2.8 / 5.1 / -	
Thermal Data				
Max. Winding Temperature (Sensor)	°C		120	
Thermal Resistance [Passive cooling / Fan / Fluid]	°K/W		2.9 / 0.88 / -	
Thermal Time Constant [Passive cooling / Fan / Fluid]	s		1200 / 350 / -	
Mechanical Data				
Slider Length	mm	(in)	900	(35)
Slider Mass	g	(lb)	2020	(4.44)

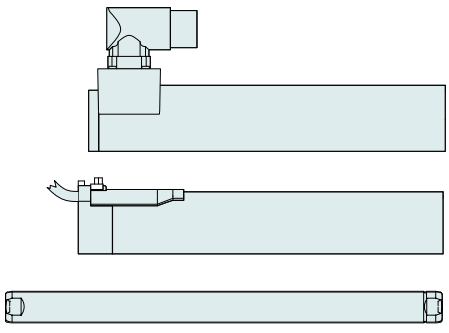

Item	Description	Item-No.
PS01-37x120F-HP-C	Stator HP with IP67 Connector M23/9(m)	0150-1251
PS01-37x120F-HP-C20	Stator HP, 0.2 m Cable, IP67 St. M23/9(m)	0150-1252
PL01-20x900/840-HP	Slider 'High Performance'	0150-1513
PL02-20x900/840-HP	Slider 'heavy duty' 'High Performace'	0150-2170
PL01-20x900/840-HP-L*	Slider 'High Performance L'	0150-3702

* With this slider, the motor specifications above change.

P01-37x120F/800x880-HP

Max. Stroke: 880 mm
Peak Force: 255 N

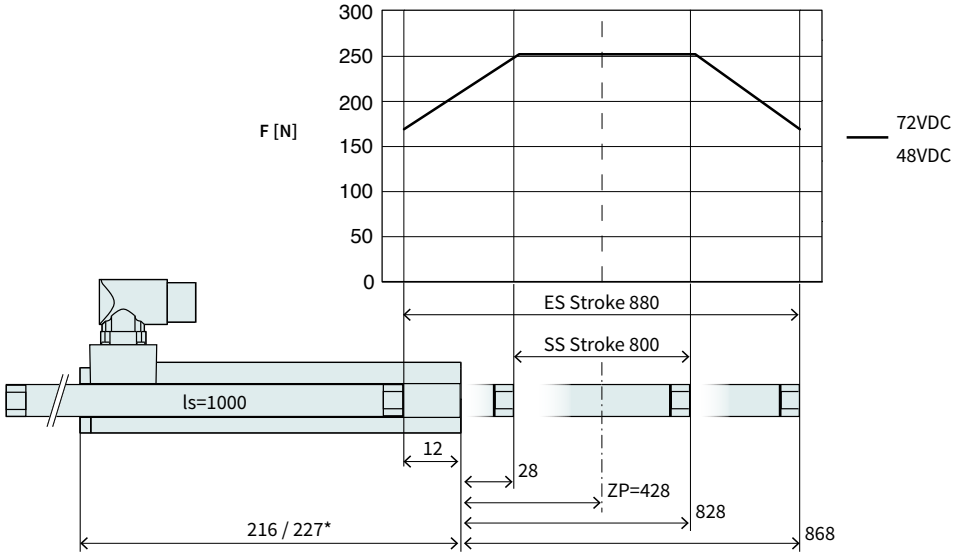

Dimensions in mm
*Cable Type

Technical Data P01-37x120F/800x880-HP				
Stroke				
Standard Stroke (SS)	mm	(in)	800	(31.49)
Extended Stroke (ES)	mm	(in)	880	(34.6)
Force				
Max. Force @ 48VDC	N	(lbf)	255	(57.3)
Max. Force @ 72VDC	N	(lbf)	255	(57.3)
Max. Cont. Force [Passive cooling/ Fan / Fluid]	N	(lbf)	48 / 87 / -	(11 / 20 / -)
Max. Border Force relative	%		67	
Force Constant	N/A_{pk}	(lbf/A_{pk})	17	(3.82)
Velocity				
Max. Velocity @ 48VDC	m/s	(in/s)	2.5	(99.9)
Max. Velocity @ 72VDC	m/s	(in/s)	3.8	(149.9)
Position Detection				
Repeatability	mm	(in)	±0.05	(±0.002)
Linearity	%		± 0.15	
Electrical Data				
Max. Current @ 48VDC	A_{pk}		14.9	
Max. Current @ 72VDC	A_{pk}		14.9	
Max. Cont. Current [Passive cooling /Fan / Fluid]	A_{pk}		2.8 / 5.1 / -	
Thermal Data				
Max. Winding Temperature (Sensor)	°C		120	
Thermal Resistance [Passive cooling / Fan / Fluid]	°K/W		2.9 / 0.88 / -	
Thermal Time Constant [Passive cooling / Fan / Fluid]	s		1200 / 350 / -	
Mechanical Data				
Slider Length	mm	(in)	1000	(39)
Slider Mass	g	(lb)	2230	(4.91)

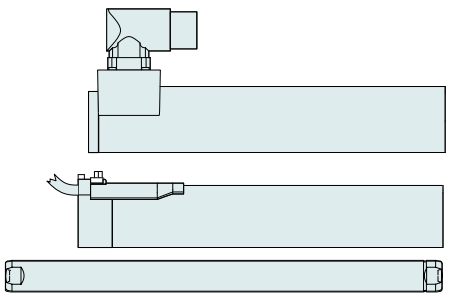

Item	Description	Item-No.
PS01-37x120F-HP-C	Stator HP with IP67 Connector M23/9(m)	0150-1251
PS01-37x120F-HP-C20	Stator HP, 0.2 m Cable, IP67 St. M23/9(m)	0150-1252
PL01-20x1000/940-HP	Slider 'High Performance'	0150-1514
PL01-20x1000/940-HP-L*	Slider 'High Performance L'	0150-3703

* With this slider, the motor specifications above change.

P01-37x120F/1000x1080-HP

Max. Stroke: 1080 mm
Peak Force: 255 N

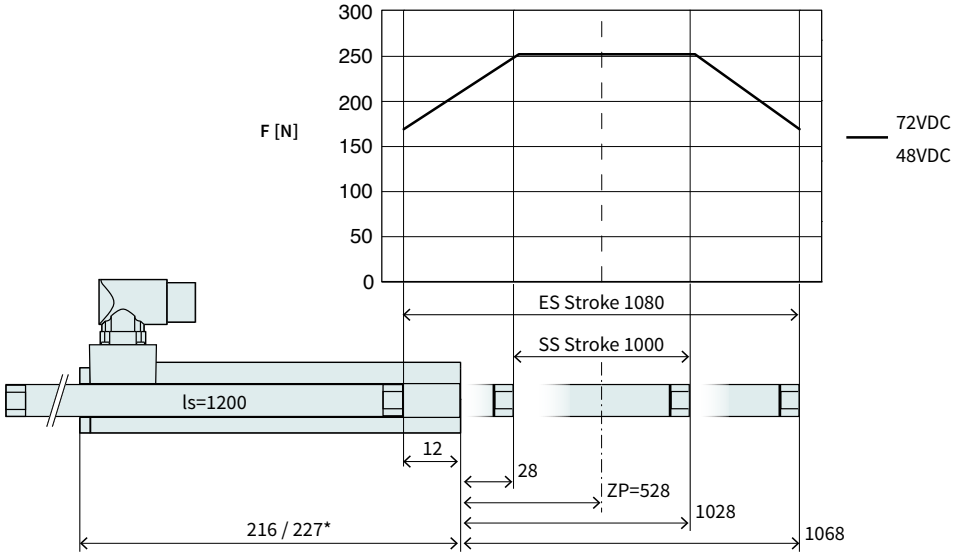

Dimensions in mm
*Cable Type

Technical Data P01-37x120F/1000x1080-HP				
Stroke				
Standard Stroke (SS)	mm	(in)	1000	(39.39)
Extended Stroke (ES)	mm	(in)	1080	(42.49)
Force				
Max. Force @ 48VDC	N	(lbf)	255	(57.3)
Max. Force @ 72VDC	N	(lbf)	255	(57.3)
Max. Cont. Force [Passive cooling/ Fan / Fluid]	N	(lbf)	48 / 87 / -	(11 / 20 / -)
Max. Border Force relative	%		67	
Force Constant	N/A_{pk}	(lbf/A_{pk})	17	(3.82)
Velocity				
Max. Velocity @ 48VDC	m/s	(in/s)	2.5	(99.9)
Max. Velocity @ 72VDC	m/s	(in/s)	3.8	(149.9)
Position Detection				
Repeatability	mm	(in)	±0.05	(±0.002)
Linearity	%		± 0.15	
Electrical Data				
Max. Current @ 48VDC	A_{pk}		14.9	
Max. Current @ 72VDC	A_{pk}		14.9	
Max. Cont. Current [Passive cooling /Fan / Fluid]	A_{pk}		2.8 / 5.1 / -	
Thermal Data				
Max. Winding Temperature (Sensor)	°C		120	
Thermal Resistance [Passive cooling / Fan / Fluid]	°K/W		2.9 / 0.88 / -	
Thermal Time Constant [Passive cooling / Fan / Fluid]	s		1200 / 350 / -	
Mechanical Data				
Slider Length	mm	(in)	1200	(47)
Slider Mass	g	(lb)	2690	(5.92)

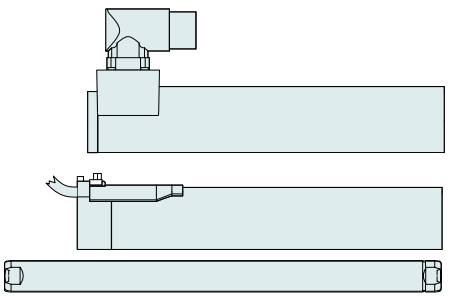

Item	Description	Item-No.
PS01-37x120F-HP-C	Stator HP with IP67 Connector M23/9(m)	0150-1251
PS01-37x120F-HP-C20	Stator HP, 0.2 m Cable, IP67 St. M23/9(m)	0150-1252
PL01-20x1200/1140-HP	Slider 'High Performance'	0150-1515
PL01-20x1200/1140-HP-L*	Slider 'High Performance L'	0150-2510

* With this slider, the motor specifications above change.

P01-37x120F/1200x1280-HP

Max. Stroke: 1280 mm
Peak Force: 255 N

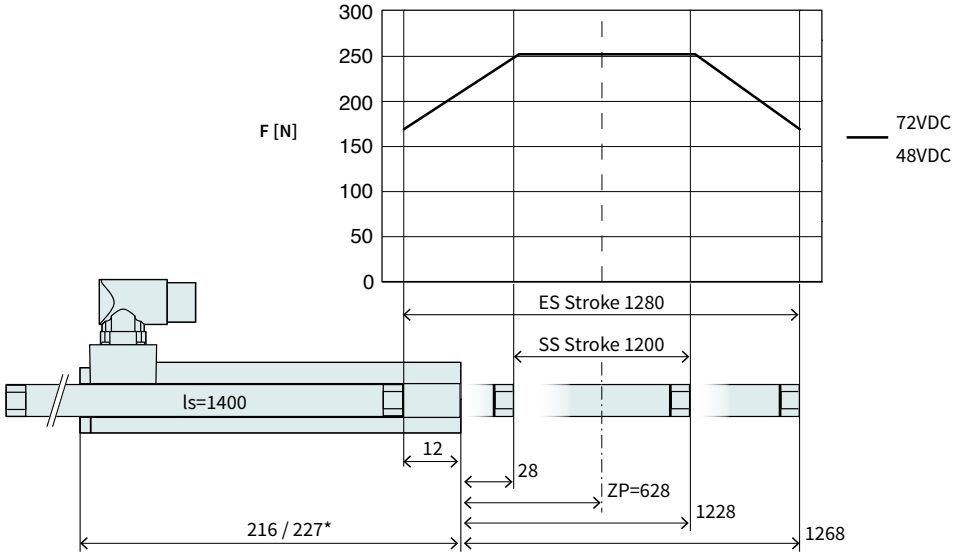

Dimensions in mm
*Cable Type

Technical Data P01-37x120F/1200x1280-HP				
Stroke				
Standard Stroke (SS)	mm	(in)	1200	(47.2)
Extended Stroke (ES)	mm	(in)	1280	(50.39)
Force				
Max. Force @ 48VDC	N	(lbf)	255	(57.3)
Max. Force @ 72VDC	N	(lbf)	255	(57.3)
Max. Cont. Force [Passive cooling/ Fan / Fluid]	N	(lbf)	48 / 87 / -	(11 / 20 / -)
Max. Border Force relative	%		67	
Force Constant	N/A_{pk}	(lbf/A_{pk})	17	(3.82)
Velocity				
Max. Velocity @ 48VDC	m/s	(in/s)	2.5	(99.9)
Max. Velocity @ 72VDC	m/s	(in/s)	3.8	(149.9)
Position Detection				
Repeatability	mm	(in)	±0.05	(±0.002)
Linearity	%		± 0.15	
Electrical Data				
Max. Current @ 48VDC	A_{pk}		14.9	
Max. Current @ 72VDC	A_{pk}		14.9	
Max. Cont. Current [Passive cooling /Fan / Fluid]	A_{pk}		2.8 / 5.1 / -	
Thermal Data				
Max. Winding Temperature (Sensor)	°C		120	
Thermal Resistance [Passive cooling / Fan / Fluid]	°K/W		2.9 / 0.88 / -	
Thermal Time Constant [Passive cooling / Fan / Fluid]	s		1200 / 350 / -	
Mechanical Data				
Slider Length	mm	(in)	1400	(55)
Slider Mass	g	(lb)	3160	(6.95)

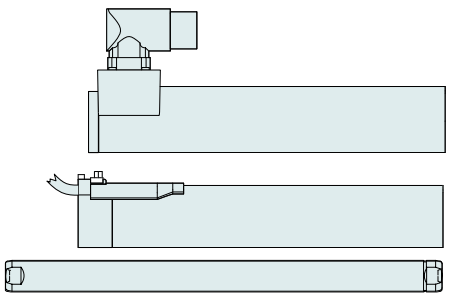

Item	Description	Item-No.
PS01-37x120F-HP-C	Stator HP with IP67 Connector M23/9(m)	0150-1251
PS01-37x120F-HP-C20	Stator HP, 0.2 m Cable, IP67 St. M23/9(m)	0150-1252
PL01-20x1400/1340-HP	Slider 'High Performance'	0150-1516
PL01-20x1400/1340-HP-L*	Slider 'High Performance L'	on request

* With this slider, the motor specifications above change.

P01-37x120F/1400x1480-HP

Max. Stroke: 1480 mm
Peak Force: 255 N

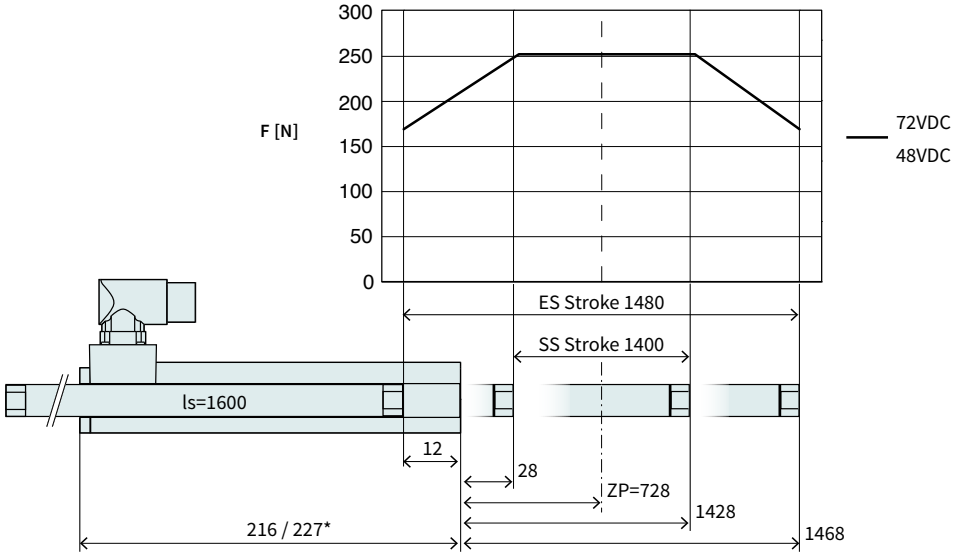

Dimensions in mm
*Cable Type

Technical Data P01-37x120F/1400x1480-HP				
Stroke				
Standard Stroke (SS)	mm	(in)	1400	(55.1)
Extended Stroke (ES)	mm	(in)	1480	(58.29)
Force				
Max. Force @ 48VDC	N	(lbf)	255	(57.3)
Max. Force @ 72VDC	N	(lbf)	255	(57.3)
Max. Cont. Force [Passive cooling/ Fan / Fluid]	N	(lbf)	48 / 87 / -	(11 / 20 / -)
Max. Border Force relative	%		67	
Force Constant	N/A_{pk}	(lbf/A_{pk})	17	(3.82)
Velocity				
Max. Velocity @ 48VDC	m/s	(in/s)	2.5	(99.9)
Max. Velocity @ 72VDC	m/s	(in/s)	3.8	(149.9)
Position Detection				
Repeatability	mm	(in)	±0.05	(±0.002)
Linearity	%		± 0.15	
Electrical Data				
Max. Current @ 48VDC	A_{pk}		14.9	
Max. Current @ 72VDC	A_{pk}		14.9	
Max. Cont. Current [Passive cooling /Fan / Fluid]	A_{pk}		2.8 / 5.1 / -	
Thermal Data				
Max. Winding Temperature (Sensor)	°C		120	
Thermal Resistance [Passive cooling / Fan / Fluid]	°K/W		2.9 / 0.88 / -	
Thermal Time Constant [Passive cooling / Fan / Fluid]	s		1200 / 350 / -	
Mechanical Data				
Slider Length	mm	(in)	1600	(63)
Slider Mass	g	(lb)	3620	(7.96)

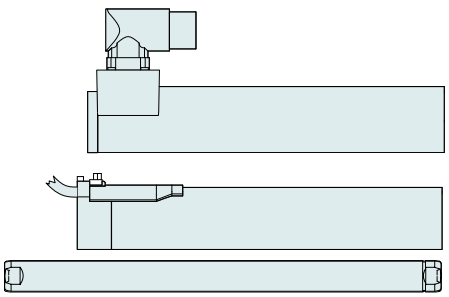

Item	Description	Item-No.
PS01-37x120F-HP-C	Stator HP with IP67 Connector M23/9(m)	0150-1251
PS01-37x120F-HP-C20	Stator HP, 0.2 m Cable, IP67 St. M23/9(m)	0150-1252
PL01-20x1600/1540-HP	Slider 'High Performance'	0150-1517
PL01-20x1600/1540-HP-L*	Slider 'High Performance L'	on request

* With this slider, the motor specifications above change.

Linear Guides H01



HM01-37x120/80	Linear Module 37x120 with 80 mm Stroke		
H-Guide	H01-37x166/80	H-Guide for P01-37x120, Stroke max 80 mm	0150-5020
	H01-37x166/80-GF	H-Guide for P01-37x120, Stroke max 80 mm	0150-5080
Stator	PS01-37x120F-HP-C	Stator HP with IP67 Connector M23/9(m)	0150-1251
	PS01-37x120F-HP-C20	Stator HP, 0.2m Cable, IP67 St. M23/9(m)	0150-1252
Slider	PL01-20x300/240-HP	Slider 'High Performance'	0150-1506
	PL02-20x300/240-HP	Slider 'heavy duty' 'High Performace'	0150-2163

HM01-37x120/180	Linear Module 37x120 with 180 mm Stroke		
H-Guide	H01-37x166/180	H-Guide for P01-37x120, Stroke max 180 mm	0150-5021
	H01-37x166/180-GF	H-Guide for P01-37x120, Stroke max 180mm	0150-5081
Stator	PS01-37x120F-HP-C	Stator HP with IP67 Connector M23/9(m)	0150-1251
	PS01-37x120F-HP-C20	Stator HP, 0.2m Cable, IP67 St. M23/9(m)	0150-1252
Slider	PL01-20x400/340-HP	Slider 'High Performance'	0150-1508
	PL02-20x400/340-HP	Slider 'heavy duty' 'High Performace'	0150-2165

HM01-37x120/280	Linear Module 37x120 with 280 mm Stroke		
H-Guide	H01-37x166/280	H-Guide for P01-37x120, Stroke max 280mm	0150-5022
	H01-37x166/280-GF	H-Guide for P01-37x120, Stroke max 280mm	0150-5082
Stator	PS01-37x120F-HP-C	Stator HP with IP67 Connector M23/9(m)	0150-1251
	PS01-37x120F-HP-C20	Stator HP, 0.2m Cable, IP67 St. M23/9(m)	0150-1252
Slider	PL01-20x500/440-HP	Slider 'High Performance'	0150-1509
	PL02-20x500/440-HP	Slider 'heavy duty' 'High Performace'	0150-2166

Accessories			
Brake	HB01-37	Pneumatic Brake for H01-37/600N (4-6Bar)	0150-5052
Fan	HV01-37/48	Fan cooling for H01-37/48 &PF02-37/48	0150-5051
MagSpring	MF01-37/H37	Flange MagSpring 37 / H-Guide 23/37/48	0250-2307
	MA01-37/H37	Adapter MagSpring 37&20 / H-Guide 37	0250-0117
Centering sleeve	HC01-09/04	Centering sleeve D9x4 mm	0150-3251
Wipers	HA01-27/20-F	Wiper for H01-37 guides, front side	0150-5108

FIND MORE PRODUCT DETAILS IN THE CHAPTER "LINEAR GUIDES".

Bridge Guide B01



BM01-37x120/160	Bridge Module 37x120 with 160 mm Stroke [1]		
B-Guide	B01-37x166/160	B-Guide for P01-37x120, Stroke max 160mm	0150-5138
	B01-37x166/160-GF	B-Guide for P01-37x120, Stroke max 160mm	0150-5141
Stator	PS01-37x120F-HP-C	Stator HP with IP67 Connector M23/9(m)	0150-1251
	PS01-37x120F-HP-C20	Stator HP, 0.2m Cable, IP67 St. M23/9(m)	0150-1252
Slider	PL01-19x395/320	Slider 'high clearance'	0150-1452

BM01-37x120/260	Bridge Module 37x120 with 260 mm Stroke [1]		
B-Guide	B01-37x166/260	B-Guide for P01-37x120, Stroke max 260mm	0150-5139
	B01-37x166/260-GF	B-Guide for P01-37x120, Stroke max 260mm	0150-5142
Stator	PS01-37x120F-HP-C	Stator HP with IP67 Connector M23/9(m)	0150-1251
	PS01-37x120F-HP-C20	Stator HP, 0.2m Cable, IP67 St. M23/9(m)	0150-1252
Slider	PL01-19x500/420	Slider 'high clearance'	0150-1455

BM01-37x120/360	Bridge Module 37x120 with 360 mm Stroke [1]		
B-Guide	B01-37x166/360	B-Guide for P01-37x120, Stroke max 360mm	0150-5140
	B01-37x166/360-GF	B-Guide for P01-37x120, Stroke max 360mm	0150-5143
Stator	PS01-37x120F-HP-C	Stator HP with IP67 Connector M23/9(m)	0150-1251
	PS01-37x120F-HP-C20	Stator HP, 0.2m Cable, IP67 St. M23/9(m)	0150-1252
Slider	PL01-19x600/520	Slider 'high clearance'	0150-1456

Accessories			
Brake	HB01-37	Pneumatic brake for H01-37 guides	0150-5052
Fan	HV01-37/48	Fan cooling for H01-37/48 &PF02-37/48	0150-5051
MagSpring	MF01-37/H37	Flange MagSpring 37 / H-Guide 23/37/48	0250-2307
	MA01-37/H37	Adapter MagSpring 37&20 / H-Guide 37	0250-0117
Centering sleeve	HC01-09/04	Centering sleeve D9x4 mm	0150-3251
Wipers	HA01-37/19-F	Wiper for H01-37 guides, front side	0150-5177

[1] The stroke is reduced by 18mm when using cable models.

FIND MORE PRODUCT DETAILS IN THE CHAPTER "LINEAR GUIDES".

Motor Cable

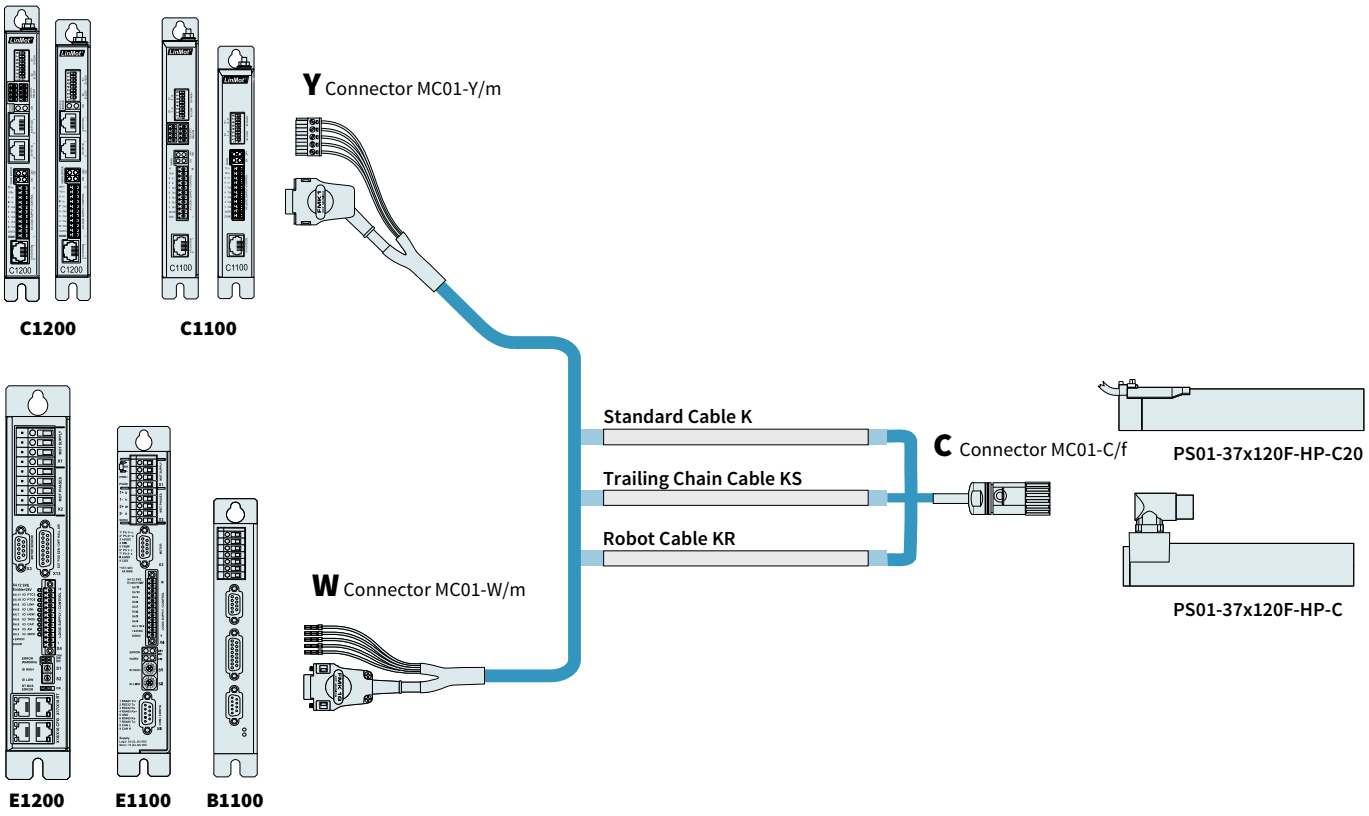

ORDERING INFORMATION

STANDARD CABLE		
Item	**Description**	**Item-No.**
K05-W/C-2	Motor Cable W/C, 2 m	0150-2123
K05-W/C-4	Motor Cable W/C, 4 m	0150-2124
K05-W/C-6	Motor Cable W/C, 6 m	0150-2125
K05-W/C-8	Motor Cable W/C, 8 m	0150-2126
K05-W/C-	Motor Cable W/C, Custom length	0150-3263
K05-Y/C-2	Motor Cable Y/R, 2 m	0150-2425
K05-Y/C-4	Motor Cable Y/R, 4 m	0150-2426
K05-Y/C-6	Motor Cable Y/R, 6 m	0150-2427
K05-Y/C-8	Motor Cable Y/R, 8 m	0150-2428
K05-Y-Fe/C-	Motor Cable Y-Fe/R, Custom length	0150-3502

TRAILING CHAIN CABLE		
Item	**Description**	**Item-No.**
KS05-W/C-4	Trailing Chain Cable W/C, 4 m	0150-2127
KS05-W/C-6	Trailing Chain Cable W/C, 6 m	0150-2128
KS05-W/C-8	Trailing Chain Cable W/C, 8 m	0150-2129
KS05-W/C-	Trailing Chain Cable W/C, Custom length	0150-3204
KS05-Y/C-4	Trailing Chain Cable Y/C, 4 m	0150-2436
KS05-Y/C-6	Trailing Chain Cable Y/C, 6 m	0150-2437
KS05-Y/C-8	Trailing Chain Cable Y/C, 8 m	0150-2438
KS05-Y/C-	Trailing Chain Cable Y-Fe/C, Custom length	0150-3508

ROBOT CABLE		
Item	**Description**	**Item-No.**
KR05-W/C-	Robot Cable KR05-W/C, Custom length	0150-3644
KR05-Y-Fe/C-	Robot Cable KR05-Y-Fe/C, Custom length	0150-3513

CONNECTOR & CABLE (INDIVIDUAL)		
Item	**Description**	**Item-No.**
MC01-W/m	Motor Connector W/m	0150-3140
MC01-Y-Fe/m	Motor Connector Y-Fe/m	0150-3289
MC01-C/f	Motor Connector C/f	0150-3080
MC01-P/f	Motor Connector P/f	0150-3021
K05-04/05	Motor Cable per m	0150-1920
KS05-04/05	Trailing Chain Cable per m	0150-1938
KR05-04/05	Robot Cable per m	0150-1846

MOTOR FLANGES



Item	Description	Item-No.
PF02-37x100	Flange 37x100 mm	0150-1998
PF02-37x140	Flange 37x140 mm	0150-2105

FIND MORE PRODUCT DETAILS IN THE CHAPTER "ACCESSORIES".

FANS



Item	Description	Item-No.
HV01-37/48	Fan cooling for H01-37, B01-37 and PF02-37	0150-5051

FIND MORE PRODUCT DETAILS IN THE CHAPTER "ACCESSORIES".

SLIDER MOUNTING



Item	Description	Item-No.
PLF01-20	Fixed Bearing Set for 19mm and 20mm Slider	0150-3083
PLF01-20-SS	Fixed Bearing Set for 19mm and 20mm Slider, Stainless steel	0150-3296
PLL01-19	Floating Bearing for PL01-19 Slider	0150-3335
PLL01-20	Floating Bearing for PL01-20 Slider	0150-3084
PLM01-20-MK	Mounting Kit for PL01-20 Slider	0150-3079

FIND MORE PRODUCT DETAILS IN THE CHAPTER "ACCESSORIES".

WIPERS



Item	Description	Item-No.
PA01-37/19-F	Wipers for PS01-37x...	0150-3225
PA01-37/19-R	Wipers for PS01-37x...-C	0150-3226
PA01-37/19-R cable	Wipers for PS01-37x... Cable Type	0150-3227
PA01-37/20-F	Wipers for PS01-37x...	0150-3126
PA01-37/20-R	Wipers for PS01-37x...-C	0150-3201
PA01-37/20-R cable	Wipers for PS01-37x...-Cable Type	0150-3221

FIND MORE PRODUCT DETAILS IN THE CHAPTER "ACCESSORIES".

EXTERNAL POSITION SENSORS

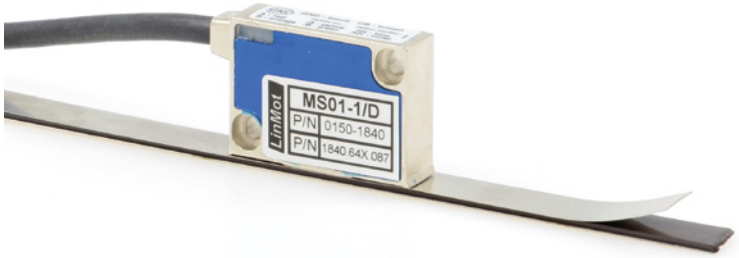

Item	Description	Item-No.
MS01-1/D	Linear Encoder 1µm, A/B (for inc. strip)	0150-1840
MB01-1000	Magnetic incremental strip for MS01-1/D, per cm	0150-1963
KS025-D/D-Encoder	Encoder Cable (Length in m)	0150-3166
KS025-D/D15-Encoder	Encoder Cable (Length in m)	0150-3168

FIND MORE PRODUCT DETAILS IN THE CHAPTER "ACCESSORIES".

LINEAR MOTORS P01-37Sx120F-HP



- Short design
- Integrated mounting flange
- Pluggable motor cable with cover
- Free positionable cable outlet
- For use where space is limited and in multi-axis applications

LINEAR MOTORS P01-37Sx120F-HP

Technical Data 249

Motor Specifications

P01-37Sx120F/40x120-HP 253
P01-37Sx120F/100x180-HP 254
P01-37Sx120F/160x240-HP 255
P01-37Sx120F/200x280-HP 256
P01-37Sx120F/300x380-HP 257
P01-37Sx120F/400x480-HP 258
P01-37Sx120F/500x580-HP 259
P01-37Sx120F/600x680-HP 260
P01-37Sx120F/700x780-HP 261
P01-37Sx120F/800x880-HP 262
P01-37Sx120F/1000x1080-HP 263
P01-37Sx120F/1200x1280-HP 264
P01-37Sx120F/1400x1480-HP 265

Accessories 266



Cable outlet -90°



Cable outlet 0°



Cable outlet 90°

MOTOR FAMILY P01-37Sx120F-HP

Technical Data				
Stroke				
Standard Stroke (SS)	mm	(in)	≤ 1400	(≤ 55.1)
Extended Stroke (ES)	mm	(in)	≤ 1480	(≤ 58.3)
Force				
Max. Force @ 48VDC	N	(lbf)	255	(57.3)
Max. Force @ 72VDC	N	(lbf)	255	(57.3)
Max. Cont. Force [Passive cooling/ Fan / Fluid]	N	(lbf)	35 / 67 / -	(7.8 / 15 / -)
Max. Border Force relative	%		≤ 67	
Force Constant	N/A_{pk}	(lbf/A_{pk})	17	(3.82)
Velocity				
Max. Velocity @ 48VDC	m/s	(in/s)	2.5	(99.9)
Max. Velocity @ 72VDC	m/s	(in/s)	3.8	(149.9)
Position Detection				
Position Resolution	mm	(in)	0.005	(0.0002)
Repeatability	mm	(in)	±0.05	(±0.002)
Position Resolution with ES	mm	(in)	0.001	(0.00004)
Repeatability with ES	mm	(in)	±0.01	(±0.0004)
Linearity with ES	mm	(in)	±0.01	(±0.0004)
Electrical Data				
Max. Current @ 48VDC	A_{pk}		14.9	
Max. Current @ 72VDC	A_{pk}		14.9	
Max. Cont. Current [Passive cooling /Fan / Fluid]	A_{pk}		2.1 / 3.9 / -	
Terminal Resistance 25 °C / 120 °C	Ohm		2.4 / 3.5	
Terminal Inductivity	mH		1.6	
Magnetic Period	mm	(in)	40	(1.57)
Thermal Data				
Max. Winding Temperature (Sensor)	°C		120	
Thermal Resistance [Passive cooling / Fan / Fluid]	°K/W		5.5 / 1.5 / -	
Thermal Time Constant [Passive cooling / Fan / Fluid]	s		2200 / 600 / -	
Mechanical Data				
Stator Diameter	mm	(in)	37	(1.5)
Stator Length [Connector type / Cable type]	mm	(in)	150	(5.9)
Stator Mass	g	(lb)	800	(1.76)
Slider Diameter	mm	(in)	20	(0.79)
Slider Length	mm	(in)	240 - 1600	(9.4 - 63)
Slider Mass	g	(lb)	490 - 3620	(1.08 - 7.96)
IP Code			IP 50	

STATOR

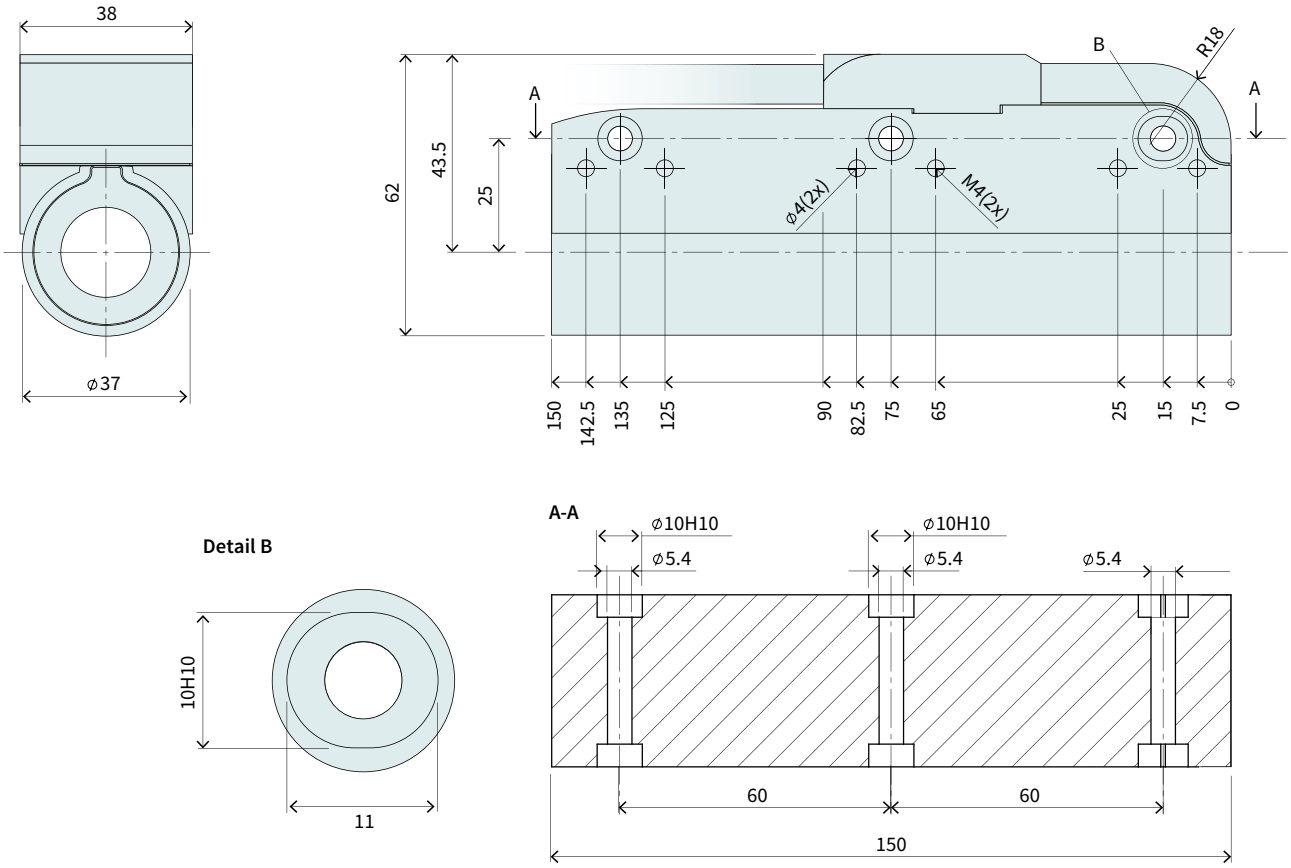

Item	Description	Item-No.
PS01-37Sx120F-HP-N	Stator HP, Cable -90°, 0°, +90°	0150-1296

CONNECTOR

Motor Connector Wiring	N-Connector	Wire color motor cable
Phase 1+	Pin 4	red
Phase 1-	Pin 3	pink
Phase 2+	Pin 2	blue
Phase 2-	Pin 1	grey
+5V	Pin A	white
GND	Pin B	Inner Shield
Sensor Sin	Pin C	yellow
Sensor Cos	Pin D	green
Temp Sensor	Pin E	black
Housing		Outer Shield

N-Connector

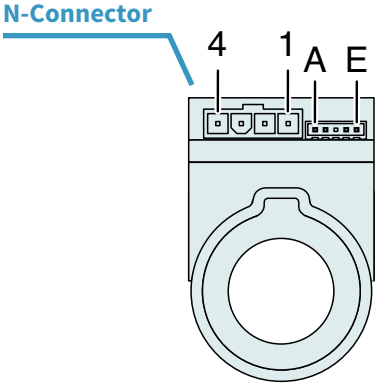

View: Motor Connector, plug side

SLIDER

Slider HP / Heavy Duty HP

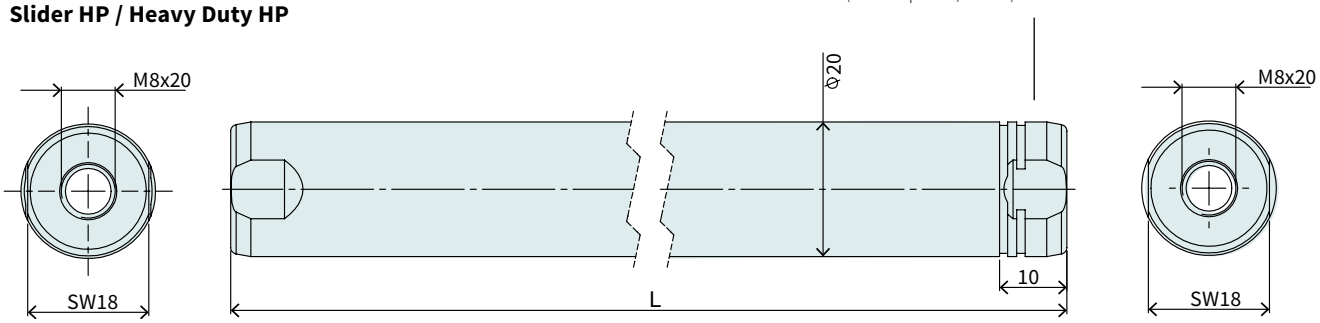

Hollow slider HP

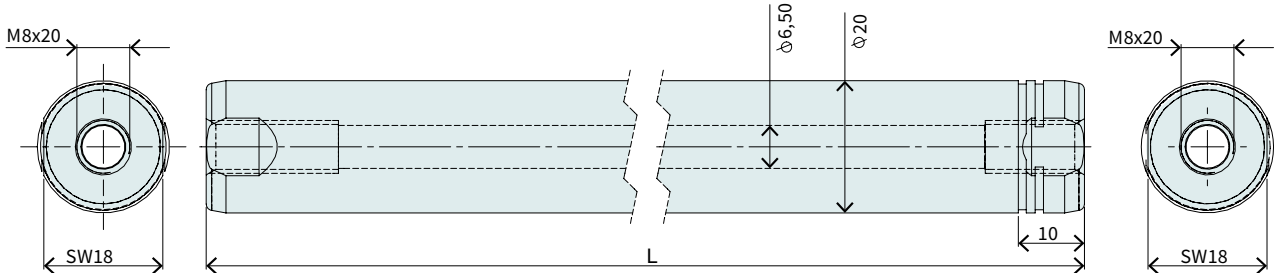

High-Clearance Slider

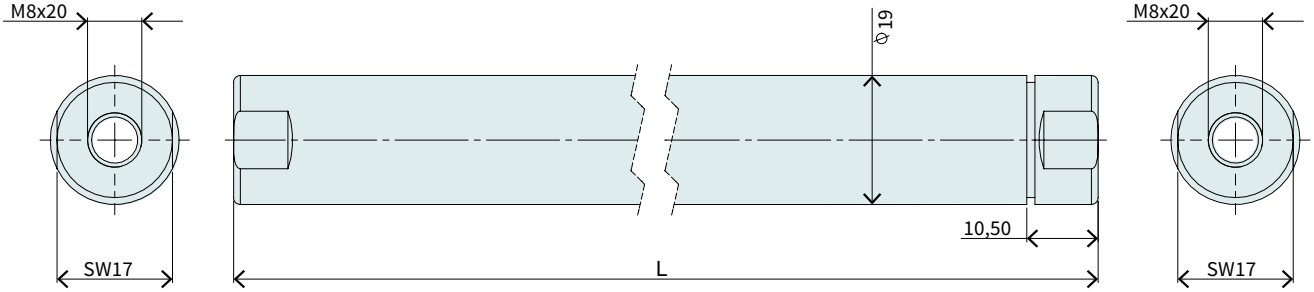

Slider High Performance				
Item	Description	Max. Stroke [mm]	Standard Stroke [mm]	Item-No.
PL01-20x240/180-HP	Slider 'High Performance'	120	100	0150-1505
PL01-20x300/240-HP	Slider 'High Performance'	180	160	0150-1506
PL01-20x360/300-HP	Slider 'High Performance'	240	220	0150-1507
PL01-20x400/340-HP	Slider 'High Performance'	280	260	0150-1508
PL01-20x500/440-HP	Slider 'High Performance'	380	360	0150-1509
PL01-20x600/540-HP	Slider 'High Performance'	480	460	0150-1510
PL01-20x700/640-HP	Slider 'High Performance'	580	560	0150-1511
PL01-20x800/740-HP	Slider 'High Performance'	680	660	0150-1512
PL01-20x900/840-HP	Slider 'High Performance'	780	760	0150-1513
PL01-20x1000/940-HP	Slider 'High Performance'	880	860	0150-1514
PL01-20x1200/1140-HP	Slider 'High Performance'	1080	1060	0150-1515
PL01-20x1400/1340-HP	Slider 'High Performance'	1280	1260	0150-1516
PL01-20x1600/1540-HP	Slider 'High Performance'	1480	1460	0150-1517

Slider Heavy Duty High Performance				
Item	Description	Max. Stroke [mm]	Standard Stroke [mm]	Item-No.
PL02-20x240/180-HP	Slider 'heavy duty' 'High Performance	120	100	0150-2162
PL02-20x300/240-HP	Slider 'heavy duty' 'High Performance	180	160	0150-2163
PL02-20x360/300-HP	Slider 'heavy duty' 'High Performance	240	220	0150-2164
PL02-20x400/340-HP	Slider 'heavy duty' 'High Performance	280	260	0150-2165
PL02-20x500/440-HP	Slider 'heavy duty' 'High Performance	380	360	0150-2166
PL02-20x600/540-HP	Slider 'heavy duty' 'High Performance	480	460	0150-2167
PL02-20x700/640-HP	Slider 'heavy duty' 'High Performance	580	560	0150-2168
PL02-20x800/740-HP	Slider 'heavy duty' 'High Performance	680	660	0150-2169
PL02-20x900/840-HP	Slider 'heavy duty' 'High Performance	780	760	0150-2170

Hollow slider High Performance				
Item	Description	Max. Stroke [mm]	Standard Stroke [mm]	Item-No.
PL01-20x240/180-HP-L	Slider 'High Performance L'	120	100	0150-2540
PL01-20x300/240-HP-L	Slider 'High Performance L'	180	160	0150-3696
PL01-20x360/300-HP-L	Slider 'High Performance L'	240	220	0150-1537
PL01-20x400/340-HP-L	Slider 'High Performance L'	280	260	0150-3697
PL01-20x500/440-HP-L	Slider 'High Performance L'	380	360	0150-3698
PL01-20x600/540-HP-L	Slider 'High Performance L'	480	460	0150-3699
PL01-20x700/640-HP-L	Slider 'High Performance L'	580	560	0150-3700
PL01-20x800/740-HP-L	Slider 'High Performance L'	680	660	0150-3701
PL01-20x900/840-HP-L	Slider 'High Performance L'	780	760	0150-3702
PL01-20x1000/940-HP-L	Slider 'High Performance L'	880	860	0150-3703
PL01-20x1200/1140-HP-L	Slider 'High Performance L'	1080	1060	0150-2510
PL01-20x1400/1340-HP-L	Slider 'High Performance L'	1280	1260	on request
PL01-20x1600/1540-HP-L	Slider 'High Performance L'	1480	1460	on request

High-Clearance Slider				
Item	Description	Max. Stroke [mm]	Standard Stroke [mm]	Item-No.
PL01-19x240/160	Slider 'high clearance'	100	80	0150-1448
PL01-19x300/220	Slider 'high clearance'	160	140	0150-1449
PL01-19x395/320	Slider 'high clearance'	260	240	0150-1452
PL01-19x500/420	Slider 'high clearance'	360	340	0150-1455
PL01-19x600/520	Slider 'high clearance'	460	440	0150-1456
PL01-19x700/620	Slider 'high clearance'	560	540	0150-1457

P01-37Sx120F/40x120-HP

Max. Stroke: 120 mm
Peak Force: 255 N

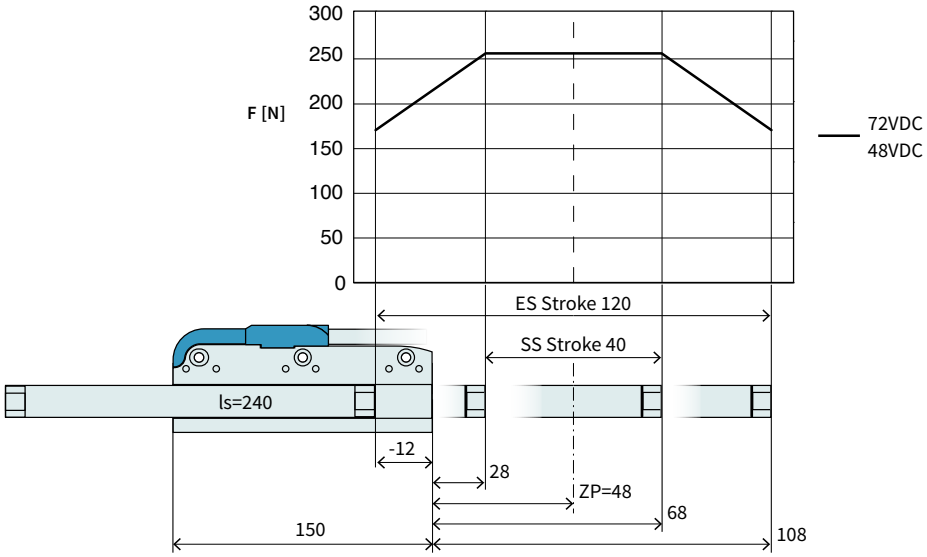

Dimensions in mm

Technical Data P01-37Sx120F/40x120-HP				
Stroke				
Standard Stroke (SS)	mm	(in)	40	(1.57)
Extended Stroke (ES)	mm	(in)	120	(4.71)
Force				
Max. Force @ 48VDC	N	(lbf)	255	(57.3)
Max. Force @ 72VDC	N	(lbf)	255	(57.3)
Max. Cont. Force [Passive cooling/ Fan / Fluid]	N	(lbf)	35 / 67 / -	(7.8 / 15 / -)
Max. Border Force relative	%		67	
Force Constant	N/A_{pk}	(lbf/A_{pk})	17	(3.82)
Velocity				
Max. Velocity @ 48VDC	m/s	(in/s)	2.5	(99.9)
Max. Velocity @ 72VDC	m/s	(in/s)	3.8	(149.9)
Position Detection				
Repeatability	mm	(in)	±0.05	(±0.002)
Linearity	%		± 0.5	
Electrical Data				
Max. Current @ 48VDC	A_{pk}		14.9	
Max. Current @ 72VDC	A_{pk}		14.9	
Max. Cont. Current [Passive cooling /Fan / Fluid]	A_{pk}		2.1 / 3.9 / -	
Thermal Data				
Max. Winding Temperature (Sensor)	°C		120	
Thermal Resistance [Passive cooling / Fan / Fluid]	°K/W		5.5 / 1.5 / -	
Thermal Time Constant [Passive cooling / Fan / Fluid]	s		2200 / 600 / -	
Mechanical Data				
Slider Length	mm	(in)	240	(9.4)
Slider Mass	g	(lb)	490	(1.08)

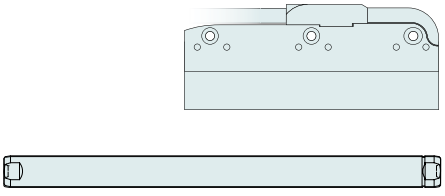

Item	Description	Item-No.
PS01-37Sx120F-HP-N	Stator HP, Cable -90°, 0°, +90°	0150-1296

PL01-20x240/180-HP	Slider 'High Performance'	0150-1505
PL02-20x240/180-HP	Slider 'heavy duty' 'High Performance	0150-2162
PL01-20x240/180-HP-L*	Slider 'High Performance L'	0150-2540
PL01-19x240/160*	Slider 'high clearance'	0150-1448

* With this slider, the motor specifications above change.

P01-37Sx120F/100x180-HP

Max. Stroke: 180 mm
Peak Force: 255 N

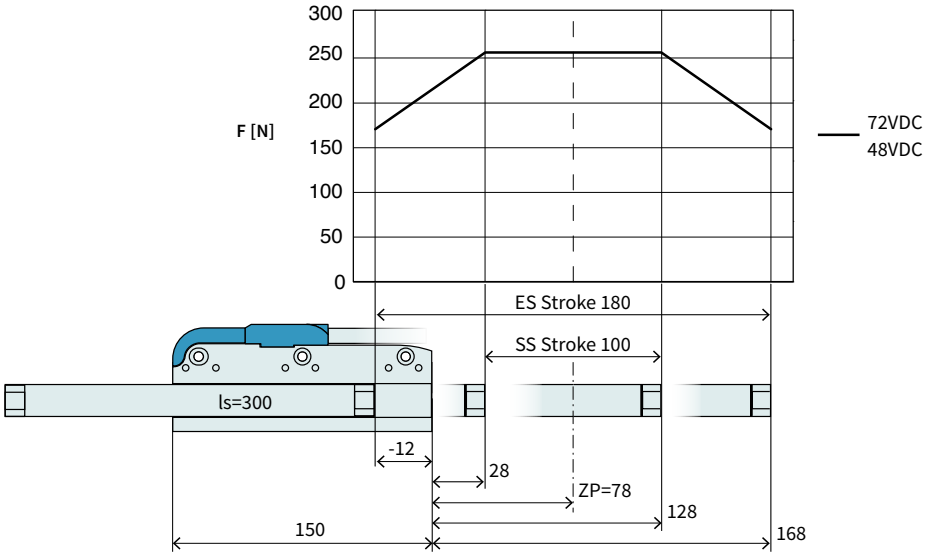

Dimensions in mm

Technical Data P01-37Sx120F/100x180-HP				
Stroke				
Standard Stroke (SS)	mm	(in)	100	(3.93)
Extended Stroke (ES)	mm	(in)	180	(7.08)
Force				
Max. Force @ 48VDC	N	(lbf)	255	(57.3)
Max. Force @ 72VDC	N	(lbf)	255	(57.3)
Max. Cont. Force [Passive cooling/ Fan / Fluid]	N	(lbf)	35 / 67 / -	(7.8 / 15 / -)
Max. Border Force relative	%		67	
Force Constant	N/A_{pk}	(lbf/A_{pk})	17	(3.82)
Velocity				
Max. Velocity @ 48VDC	m/s	(in/s)	2.5	(99.9)
Max. Velocity @ 72VDC	m/s	(in/s)	3.8	(149.9)
Position Detection				
Repeatability	mm	(in)	±0.05	(±0.002)
Linearity	%		± 0.4	
Electrical Data				
Max. Current @ 48VDC	A_{pk}		14.9	
Max. Current @ 72VDC	A_{pk}		14.9	
Max. Cont. Current [Passive cooling /Fan / Fluid]	A_{pk}		2.1 / 3.9 / -	
Thermal Data				
Max. Winding Temperature (Sensor)	°C		120	
Thermal Resistance [Passive cooling / Fan / Fluid]	°K/W		5.5 / 1.5 / -	
Thermal Time Constant [Passive cooling / Fan / Fluid]	s		2200 / 600 / -	
Mechanical Data				
Slider Length	mm	(in)	300	(12)
Slider Mass	g	(lb)	630	(1.39)

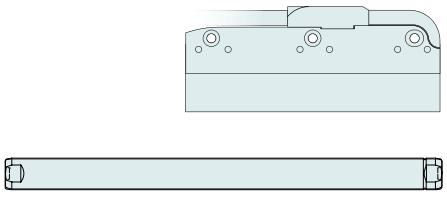

Item	Description	Item-No.
PS01-37Sx120F-HP-N	Stator HP, Cable -90°, 0°, +90°	0150-1296

PL01-20x300/240-HP	Slider 'High Performance'	0150-1506
PL02-20x300/240-HP	Slider 'heavy duty' 'High Performance	0150-2163
PL01-20x300/240-HP-L*	Slider 'High Performance L'	0150-3696
PL01-19x300/220*	Slider 'high clearance'	0150-1449

* With this slider, the motor specifications above change.

P01-37Sx120F/160x240-HP

Max. Stroke: 240 mm
Peak Force: 255 N

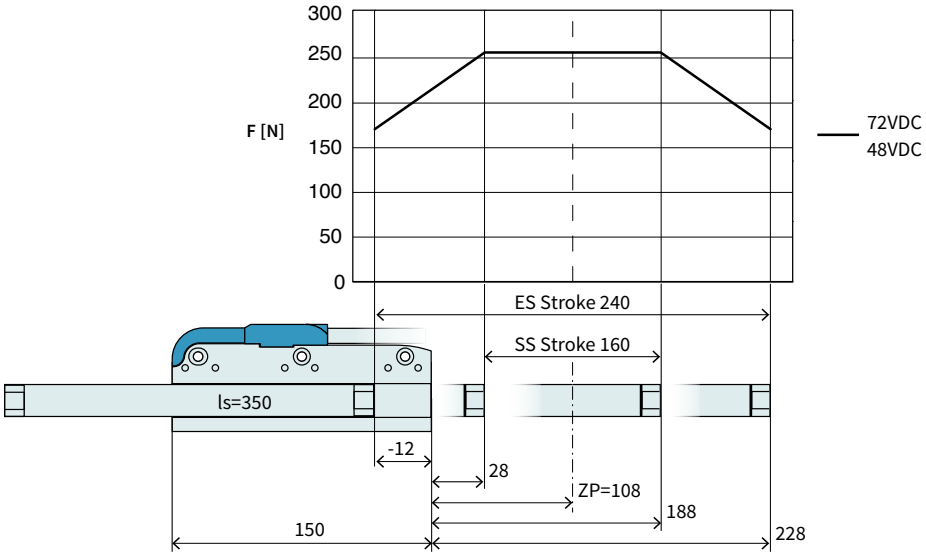

Dimensions in mm

Technical Data P01-37Sx120F/160x240-HP				
Stroke				
Standard Stroke (SS)	mm	(in)	160	(6.29)
Extended Stroke (ES)	mm	(in)	240	(9.44)
Force				
Max. Force @ 48VDC	N	(lbf)	255	(57.3)
Max. Force @ 72VDC	N	(lbf)	255	(57.3)
Max. Cont. Force [Passive cooling/ Fan / Fluid]	N	(lbf)	35 / 67 / -	(7.8 / 15 / -)
Max. Border Force relative	%		67	
Force Constant	N/A_{pk}	(lbf/A_{pk})	17	(3.82)
Velocity				
Max. Velocity @ 48VDC	m/s	(in/s)	2.5	(99.9)
Max. Velocity @ 72VDC	m/s	(in/s)	3.8	(149.9)
Position Detection				
Repeatability	mm	(in)	±0.05	(±0.002)
Linearity	%		± 0.3	
Electrical Data				
Max. Current @ 48VDC	A_{pk}		14.9	
Max. Current @ 72VDC	A_{pk}		14.9	
Max. Cont. Current [Passive cooling /Fan / Fluid]	A_{pk}		2.1 / 3.9 / -	
Thermal Data				
Max. Winding Temperature (Sensor)	°C		120	
Thermal Resistance [Passive cooling / Fan / Fluid]	°K/W		5.5 / 1.5 / -	
Thermal Time Constant [Passive cooling / Fan / Fluid]	s		2200 / 600 / -	
Mechanical Data				
Slider Length	mm	(in)	360	(14)
Slider Mass	g	(lb)	760	(1.67)

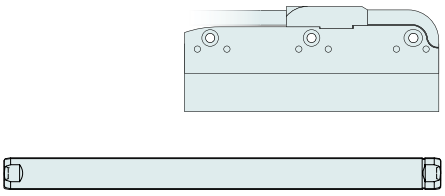

Item	Description	Item-No.
PS01-37Sx120F-HP-N	Stator HP, Cable -90°, 0°, +90°	0150-1296

PL01-20x360/300-HP	Slider 'High Performance'	0150-1507
PL02-20x360/300-HP	Slider 'heavy duty' 'High Performance	0150-2164
PL01-20x360/300-HP-L*	Slider 'High Performance L'	0150-1537

* With this slider, the motor specifications above change.

P01-37Sx120F/200x280-HP

Max. Stroke: 280 mm
Peak Force: 255 N

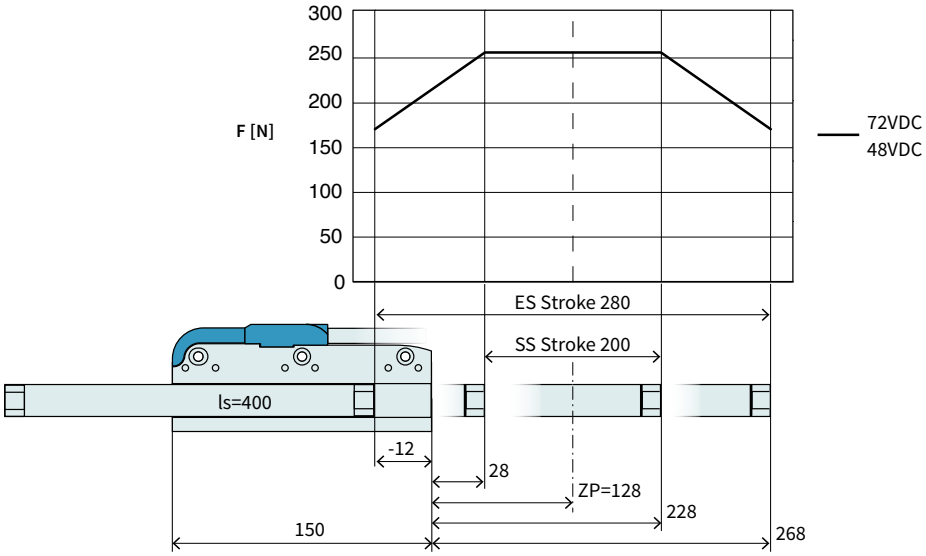

Dimensions in mm

Technical Data P01-37Sx120F/200x280-HP				
Stroke				
Standard Stroke (SS)	mm	(in)	200	(7.86)
Extended Stroke (ES)	mm	(in)	280	(10.99)
Force				
Max. Force @ 48VDC	N	(lbf)	255	(57.3)
Max. Force @ 72VDC	N	(lbf)	255	(57.3)
Max. Cont. Force [Passive cooling/ Fan / Fluid]	N	(lbf)	35 / 67 / -	(7.8 / 15 / -)
Max. Border Force relative	%		67	
Force Constant	N/A_{pk}	(lbf/A_{pk})	17	(3.82)
Velocity				
Max. Velocity @ 48VDC	m/s	(in/s)	2.5	(99.9)
Max. Velocity @ 72VDC	m/s	(in/s)	3.8	(149.9)
Position Detection				
Repeatability	mm	(in)	±0.05	(±0.002)
Linearity	%		± 0.3	
Electrical Data				
Max. Current @ 48VDC	A_{pk}		14.9	
Max. Current @ 72VDC	A_{pk}		14.9	
Max. Cont. Current [Passive cooling /Fan / Fluid]	A_{pk}		2.1 / 3.9 / -	
Thermal Data				
Max. Winding Temperature (Sensor)	°C		120	
Thermal Resistance [Passive cooling / Fan / Fluid]	°K/W		5.5 / 1.5 / -	
Thermal Time Constant [Passive cooling / Fan / Fluid]	s		2200 / 600 / -	
Mechanical Data				
Slider Length	mm	(in)	400	(16)
Slider Mass	g	(lb)	860	(1.9)

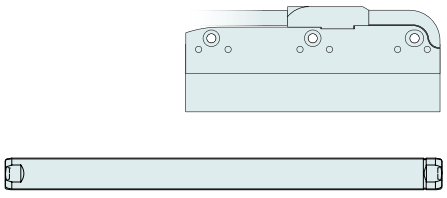

Item	Description	Item-No.
PS01-37Sx120F-HP-N	Stator HP, Cable -90°, 0°, +90°	0150-1296

PL01-20x400/340-HP	Slider 'High Performance'	0150-1508
PL02-20x400/340-HP	Slider 'heavy duty' 'High Performance	0150-2165
PL01-20x400/340-HP-L*	Slider 'High Performance L'	0150-3697
PL01-19x395/320*	Slider 'high clearance'	0150-1452

* With this slider, the motor specifications above change.

P01-37Sx120F/300x380-HP

Max. Stroke: 380 mm
Peak Force: 255 N

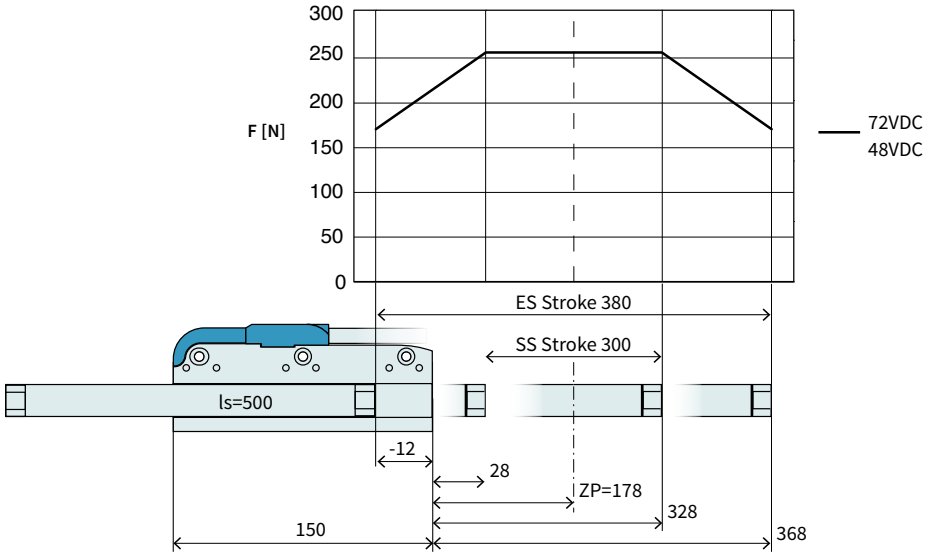

Dimensions in mm

Technical Data P01-37Sx120F/300x380-HP				
Stroke				
Standard Stroke (SS)	mm	(in)	300	(11.8)
Extended Stroke (ES)	mm	(in)	380	(14.99)
Force				
Max. Force @ 48VDC	N	(lbf)	255	(57.3)
Max. Force @ 72VDC	N	(lbf)	255	(57.3)
Max. Cont. Force [Passive cooling/ Fan / Fluid]	N	(lbf)	35 / 67 / -	(7.8 / 15 / -)
Max. Border Force relative	%		67	
Force Constant	N/A_{pk}	(lbf/A_{pk})	17	(3.82)
Velocity				
Max. Velocity @ 48VDC	m/s	(in/s)	2.5	(99.9)
Max. Velocity @ 72VDC	m/s	(in/s)	3.8	(149.9)
Position Detection				
Repeatability	mm	(in)	±0.05	(±0.002)
Linearity	%		± 0.25	
Electrical Data				
Max. Current @ 48VDC	A_{pk}		14.9	
Max. Current @ 72VDC	A_{pk}		14.9	
Max. Cont. Current [Passive cooling /Fan / Fluid]	A_{pk}		2.1 / 3.9 / -	
Thermal Data				
Max. Winding Temperature (Sensor)	°C		120	
Thermal Resistance [Passive cooling / Fan / Fluid]	°K/W		5.5 / 1.5 / -	
Thermal Time Constant [Passive cooling / Fan / Fluid]	s		2200 / 600 / -	
Mechanical Data				
Slider Length	mm	(in)	500	(20)
Slider Mass	g	(lb)	1090	(2.4)

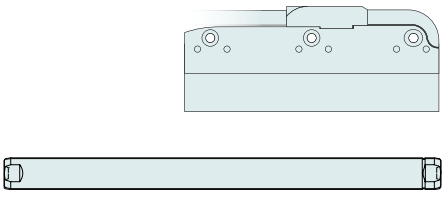

Item	Description	Item-No.
PS01-37Sx120F-HP-N	Stator HP, Cable -90°, 0°, +90°	0150-1296

PL01-20x500/440-HP	Slider 'High Performance'	0150-1509
PL02-20x500/440-HP	Slider 'heavy duty' 'High Performance	0150-2166
PL01-20x500/440-HP-L*	Slider 'High Performance L'	0150-3698
PL01-19x500/420*	Slider 'high clearance'	0150-1455

* With this slider, the motor specifications above change.

P01-37Sx120F/400x480-HP

Max. Stroke: 480 mm
Peak Force: 255 N

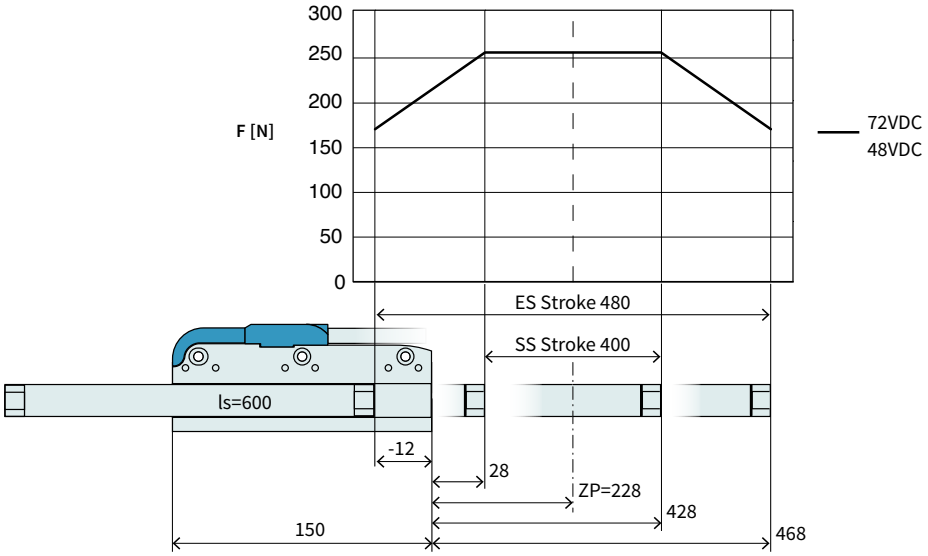

Dimensions in mm

Technical Data P01-37Sx120F/400x480-HP				
Stroke				
Standard Stroke (SS)	mm	(in)	400	(15.69)
Extended Stroke (ES)	mm	(in)	480	(18.89)
Force				
Max. Force @ 48VDC	N	(lbf)	255	(57.3)
Max. Force @ 72VDC	N	(lbf)	255	(57.3)
Max. Cont. Force [Passive cooling/ Fan / Fluid]	N	(lbf)	35 / 67 / -	(7.8 / 15 / -)
Max. Border Force relative	%		67	
Force Constant	N/A_{pk}	(lbf/A_{pk})	17	(3.82)
Velocity				
Max. Velocity @ 48VDC	m/s	(in/s)	2.5	(99.9)
Max. Velocity @ 72VDC	m/s	(in/s)	3.8	(149.9)
Position Detection				
Repeatability	mm	(in)	±0.05	(±0.002)
Linearity	%		± 0.2	
Electrical Data				
Max. Current @ 48VDC	A_{pk}		14.9	
Max. Current @ 72VDC	A_{pk}		14.9	
Max. Cont. Current [Passive cooling /Fan / Fluid]	A_{pk}		2.1 / 3.9 / -	
Thermal Data				
Max. Winding Temperature (Sensor)	°C		120	
Thermal Resistance [Passive cooling / Fan / Fluid]	°K/W		5.5 / 1.5 / -	
Thermal Time Constant [Passive cooling / Fan / Fluid]	s		2200 / 600 / -	
Mechanical Data				
Slider Length	mm	(in)	600	(24)
Slider Mass	g	(lb)	1330	(2.93)

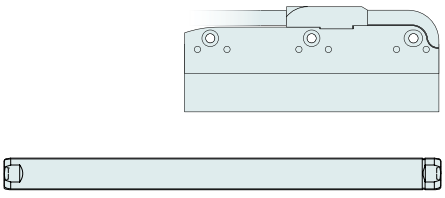

Item	Description	Item-No.
PS01-37Sx120F-HP-N	Stator HP, Cable -90°, 0°, +90°	0150-1296
PL01-20x600/540-HP	Slider 'High Performance'	0150-1510
PL02-20x600/540-HP	Slider 'heavy duty' 'High Performance	0150-2167
PL01-20x600/540-HP-L*	Slider 'High Performance L'	0150-3699
PL01-19x600/520*	Slider 'high clearance'	0150-1456

* With this slider, the motor specifications above change.

P01-37Sx120F/500x580-HP

Max. Stroke: 580 mm
Peak Force: 255 N

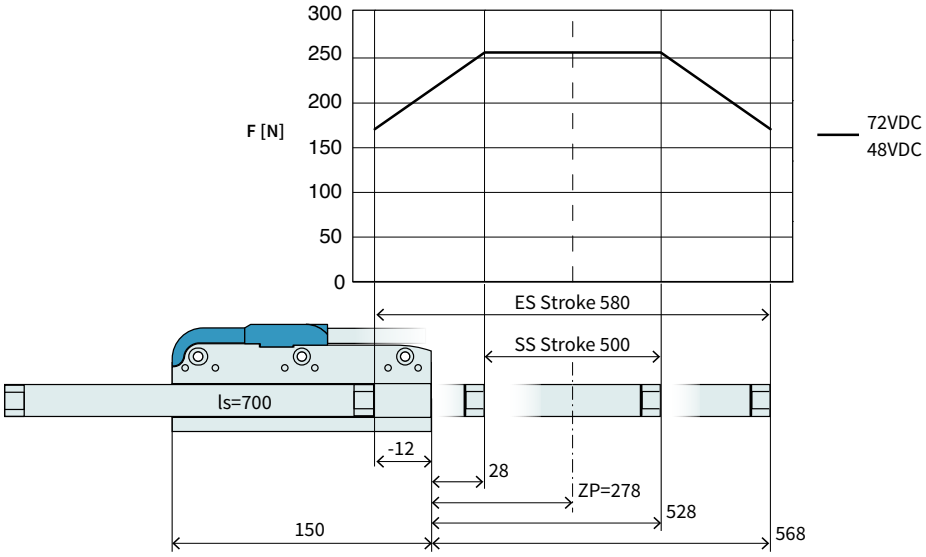

Dimensions in mm

Technical Data P01-37Sx120F/500x580-HP				
Stroke				
Standard Stroke (SS)	mm	(in)	500	(19.69)
Extended Stroke (ES)	mm	(in)	580	(22.8)
Force				
Max. Force @ 48VDC	N	(lbf)	255	(57.3)
Max. Force @ 72VDC	N	(lbf)	255	(57.3)
Max. Cont. Force [Passive cooling/ Fan / Fluid]	N	(lbf)	35 / 67 / -	(7.8 / 15 / -)
Max. Border Force relative	%		67	
Force Constant	N/A_{pk}	(lbf/A_{pk})	17	(3.82)
Velocity				
Max. Velocity @ 48VDC	m/s	(in/s)	2.5	(99.9)
Max. Velocity @ 72VDC	m/s	(in/s)	3.8	(149.9)
Position Detection				
Repeatability	mm	(in)	±0.05	(±0.002)
Linearity	%		± 0.2	
Electrical Data				
Max. Current @ 48VDC	A_{pk}		14.9	
Max. Current @ 72VDC	A_{pk}		14.9	
Max. Cont. Current [Passive cooling /Fan / Fluid]	A_{pk}		2.1 / 3.9 / -	
Thermal Data				
Max. Winding Temperature (Sensor)	°C		120	
Thermal Resistance [Passive cooling / Fan / Fluid]	°K/W		5.5 / 1.5 / -	
Thermal Time Constant [Passive cooling / Fan / Fluid]	s		2200 / 600 / -	
Mechanical Data				
Slider Length	mm	(in)	700	(28)
Slider Mass	g	(lb)	1560	(3.43)

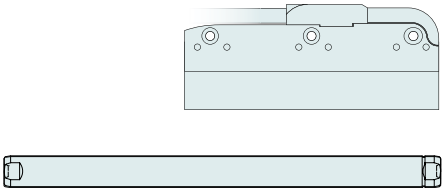

Item	Description	Item-No.
PS01-37Sx120F-HP-N	Stator HP, Cable -90°, 0°, +90°	0150-1296

PL01-20x700/640-HP	Slider 'High Performance'	0150-1511
PL02-20x700/640-HP	Slider 'heavy duty' 'High Performance	0150-2168
PL01-20x700/640-HP-L*	Slider 'High Performance L'	0150-3700
PL01-19x700/620*	Slider 'high clearance'	0150-1457

* With this slider, the motor specifications above change.

P01-37Sx120F/600x680-HP

Max. Stroke: 680 mm
Peak Force: 255 N

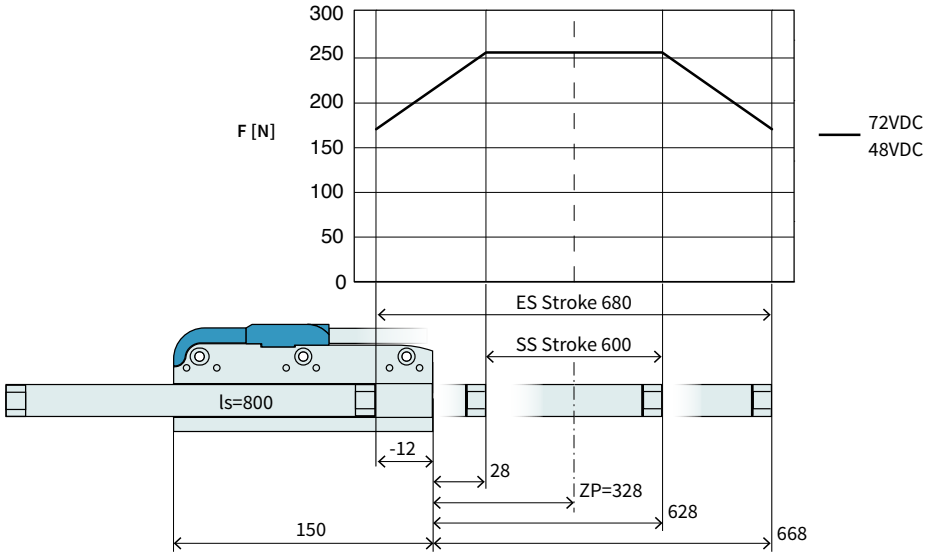

Dimensions in mm

Technical Data P01-37Sx120F/600x680-HP				
Stroke				
Standard Stroke (SS)	mm	(in)	600	(23.6)
Extended Stroke (ES)	mm	(in)	680	(26.8)
Force				
Max. Force @ 48VDC	N	(lbf)	255	(57.3)
Max. Force @ 72VDC	N	(lbf)	255	(57.3)
Max. Cont. Force [Passive cooling/ Fan / Fluid]	N	(lbf)	35 / 67 / -	(7.8 / 15 / -)
Max. Border Force relative	%		67	
Force Constant	N/A_{pk}	(lbf/A_{pk})	17	(3.82)
Velocity				
Max. Velocity @ 48VDC	m/s	(in/s)	2.5	(99.9)
Max. Velocity @ 72VDC	m/s	(in/s)	3.8	(149.9)
Position Detection				
Repeatability	mm	(in)	±0.05	(±0.002)
Linearity	%		± 0.15	
Electrical Data				
Max. Current @ 48VDC	A_{pk}		14.9	
Max. Current @ 72VDC	A_{pk}		14.9	
Max. Cont. Current [Passive cooling /Fan / Fluid]	A_{pk}		2.1 / 3.9 / -	
Thermal Data				
Max. Winding Temperature (Sensor)	°C		120	
Thermal Resistance [Passive cooling / Fan / Fluid]	°K/W		5.5 / 1.5 / -	
Thermal Time Constant [Passive cooling / Fan / Fluid]	s		2200 / 600 / -	
Mechanical Data				
Slider Length	mm	(in)	800	(31)
Slider Mass	g	(lb)	1790	(3.94)

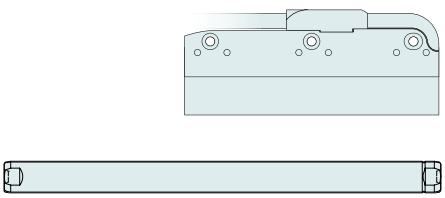

Item	Description	Item-No.
PS01-37Sx120F-HP-N	Stator HP, Cable -90°, 0°, +90°	0150-1296
PL01-20x800/740-HP	Slider 'High Performance'	0150-1512
PL02-20x800/740-HP	Slider 'heavy duty' 'High Performance	0150-2169
PL01-20x800/740-HP-L*	Slider 'High Performance L'	0150-3701

* With this slider, the motor specifications above change.

P01-37Sx120F/700x780-HP

Max. Stroke: 780 mm
Peak Force: 255 N

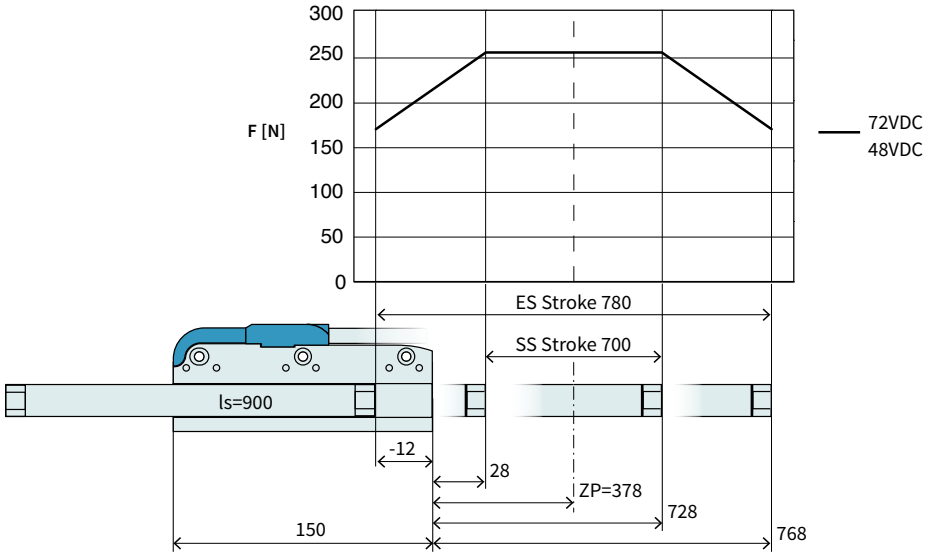

Dimensions in mm

Technical Data P01-37Sx120F/700x780-HP				
Stroke				
Standard Stroke (SS)	mm	(in)	700	(27.6)
Extended Stroke (ES)	mm	(in)	780	(30.69)
Force				
Max. Force @ 48VDC	N	(lbf)	255	(57.3)
Max. Force @ 72VDC	N	(lbf)	255	(57.3)
Max. Cont. Force [Passive cooling/ Fan / Fluid]	N	(lbf)	35 / 67 / -	(7.8 / 15 / -)
Max. Border Force relative	%		67	
Force Constant	N/A_{pk}	(lbf/A_{pk})	17	(3.82)
Velocity				
Max. Velocity @ 48VDC	m/s	(in/s)	2.5	(99.9)
Max. Velocity @ 72VDC	m/s	(in/s)	3.8	(149.9)
Position Detection				
Repeatability	mm	(in)	±0.05	(±0.002)
Linearity	%		± 0.15	
Electrical Data				
Max. Current @ 48VDC	A_{pk}		14.9	
Max. Current @ 72VDC	A_{pk}		14.9	
Max. Cont. Current [Passive cooling /Fan / Fluid]	A_{pk}		2.1 / 3.9 / -	
Thermal Data				
Max. Winding Temperature (Sensor)	°C		120	
Thermal Resistance [Passive cooling / Fan / Fluid]	°K/W		5.5 / 1.5 / -	
Thermal Time Constant [Passive cooling / Fan / Fluid]	s		2200 / 600 / -	
Mechanical Data				
Slider Length	mm	(in)	900	(35)
Slider Mass	g	(lb)	2020	(4.44)

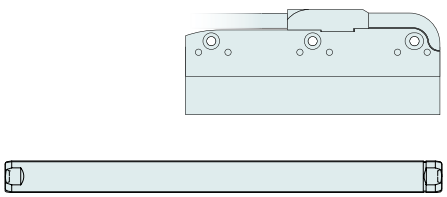

Item	Description	Item-No.
PS01-37Sx120F-HP-N	Stator HP, Cable -90°, 0°, +90°	0150-1296
PL01-20x900/840-HP	Slider 'High Performance'	0150-1513
PL02-20x900/840-HP	Slider 'heavy duty' 'High Performance	0150-2170
PL01-20x900/840-HP-L*	Slider 'High Performance L'	0150-3702

* With this slider, the motor specifications above change.

P01-37Sx120F/800x880-HP

Max. Stroke: 880 mm
Peak Force: 255 N

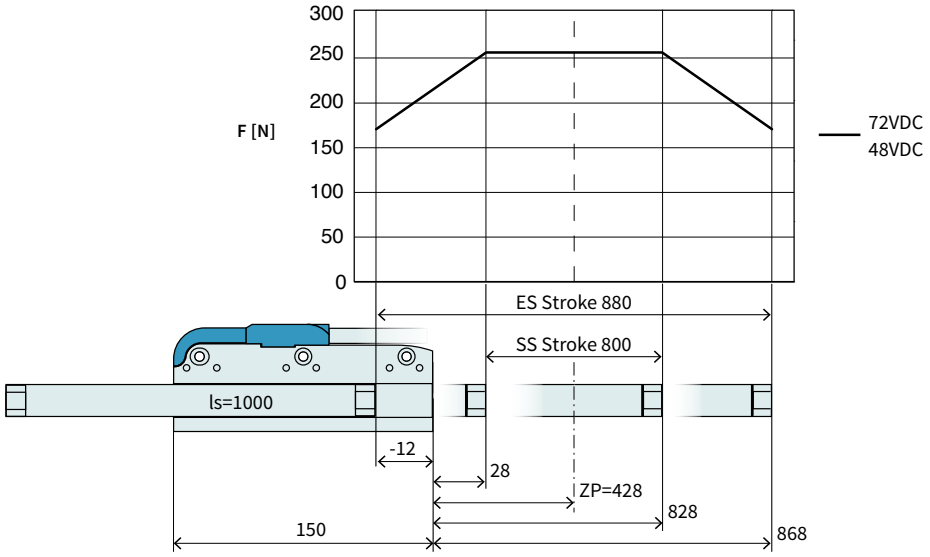

Dimensions in mm

Technical Data P01-37Sx120F/800x880-HP				
Stroke				
Standard Stroke (SS)	mm	(in)	800	(31.49)
Extended Stroke (ES)	mm	(in)	880	(34.6)
Force				
Max. Force @ 48VDC	N	(lbf)	255	(57.3)
Max. Force @ 72VDC	N	(lbf)	255	(57.3)
Max. Cont. Force [Passive cooling/ Fan / Fluid]	N	(lbf)	35 / 67 / -	(7.8 / 15 / -)
Max. Border Force relative	%		67	
Force Constant	N/A_{pk}	(lbf/A_{pk})	17	(3.82)
Velocity				
Max. Velocity @ 48VDC	m/s	(in/s)	2.5	(99.9)
Max. Velocity @ 72VDC	m/s	(in/s)	3.8	(149.9)
Position Detection				
Repeatability	mm	(in)	±0.05	(±0.002)
Linearity	%		± 0.15	
Electrical Data				
Max. Current @ 48VDC	A_{pk}		14.9	
Max. Current @ 72VDC	A_{pk}		14.9	
Max. Cont. Current [Passive cooling /Fan / Fluid]	A_{pk}		2.1 / 3.9 / -	
Thermal Data				
Max. Winding Temperature (Sensor)	°C		120	
Thermal Resistance [Passive cooling / Fan / Fluid]	°K/W		5.5 / 1.5 / -	
Thermal Time Constant [Passive cooling / Fan / Fluid]	s		2200 / 600 / -	
Mechanical Data				
Slider Length	mm	(in)	1000	(39)
Slider Mass	g	(lb)	2230	(4.91)

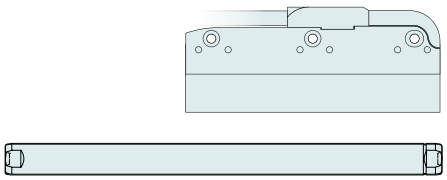

Item	Description	Item-No.
PS01-37Sx120F-HP-N	Stator HP, Cable -90°, 0°, +90°	0150-1296

PL01-20x1000/940-HP	Slider 'High Performance'	0150-1514
PL01-20x1000/940-HP-L*	Slider 'High Performance L'	0150-3703

* With this slider, the motor specifications above change.

P01-37Sx120F/1000x1080-HP

Max. Stroke: 1080 mm
Peak Force: 255 N

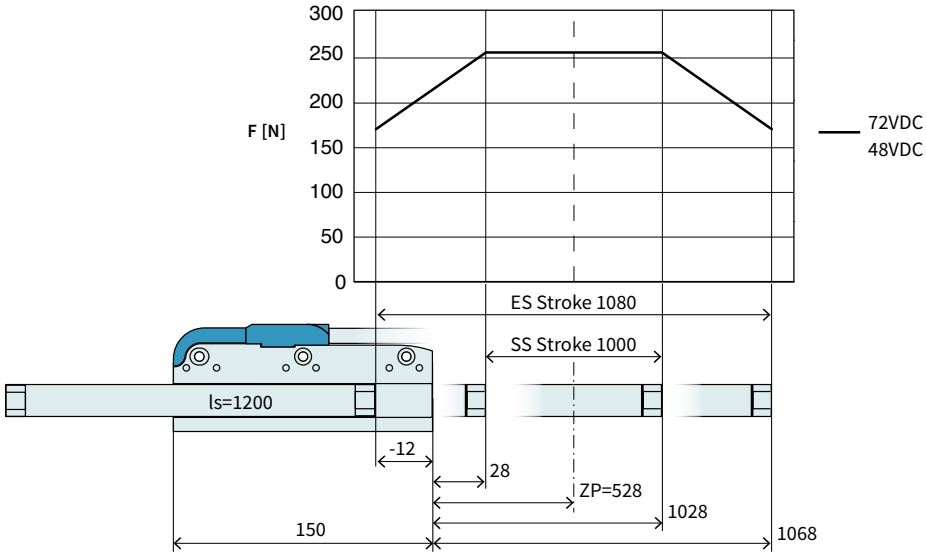

Dimensions in mm

Technical Data P01-37Sx120F/1000x1080-HP				
Stroke				
Standard Stroke (SS)	mm	(in)	1000	(39.39)
Extended Stroke (ES)	mm	(in)	1080	(42.49)
Force				
Max. Force @ 48VDC	N	(lbf)	255	(57.3)
Max. Force @ 72VDC	N	(lbf)	255	(57.3)
Max. Cont. Force [Passive cooling/ Fan / Fluid]	N	(lbf)	35 / 67 / -	(7.8 / 15 / -)
Max. Border Force relative	%		67	
Force Constant	N/A_{pk}	(lbf/A_{pk})	17	(3.82)
Velocity				
Max. Velocity @ 48VDC	m/s	(in/s)	2.5	(99.9)
Max. Velocity @ 72VDC	m/s	(in/s)	3.8	(149.9)
Position Detection				
Repeatability	mm	(in)	±0.05	(±0.002)
Linearity	%		± 0.15	
Electrical Data				
Max. Current @ 48VDC	A_{pk}		14.9	
Max. Current @ 72VDC	A_{pk}		14.9	
Max. Cont. Current [Passive cooling /Fan / Fluid]	A_{pk}		2.1 / 3.9 / -	
Thermal Data				
Max. Winding Temperature (Sensor)	°C		120	
Thermal Resistance [Passive cooling / Fan / Fluid]	°K/W		5.5 / 1.5 / -	
Thermal Time Constant [Passive cooling / Fan / Fluid]	s		2200 / 600 / -	
Mechanical Data				
Slider Length	mm	(in)	1200	(47)
Slider Mass	g	(lb)	2690	(5.92)

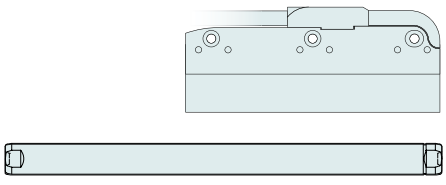

Item	Description	Item-No.
PS01-37Sx120F-HP-N	Stator HP, Cable -90°, 0°, +90°	0150-1296
PL01-20x1200/1140-HP	Slider 'High Performance'	0150-1515
PL01-20x1200/1140-HP-L*	Slider 'High Performance L'	0150-2510

* With this slider, the motor specifications above change.

P01-37Sx120F/1200x1280-HP

Max. Stroke: 1280 mm
Peak Force: 255 N

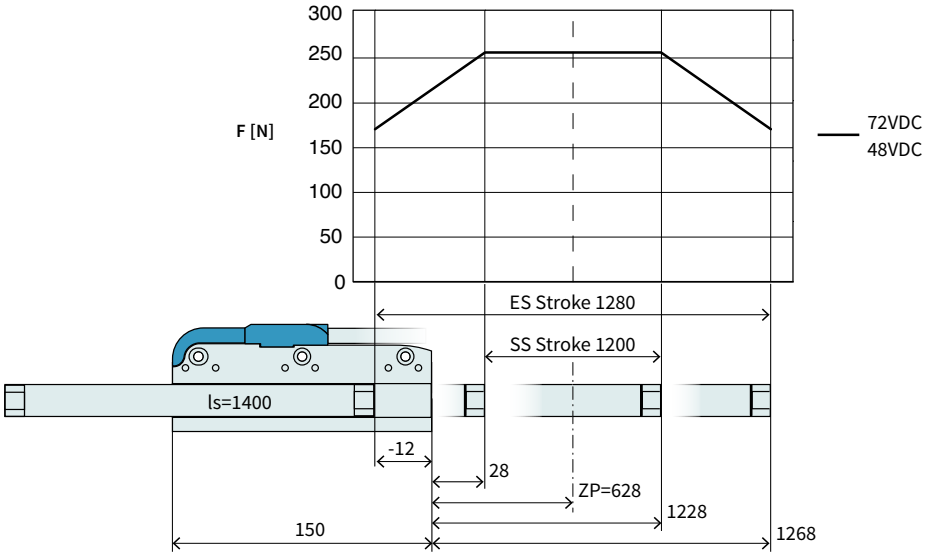

Dimensions in mm

Technical Data P01-37Sx120F/1200x1280-HP				
Stroke				
Standard Stroke (SS)	mm	(in)	1200	(47.2)
Extended Stroke (ES)	mm	(in)	1280	(50.39)
Force				
Max. Force @ 48VDC	N	(lbf)	255	(57.3)
Max. Force @ 72VDC	N	(lbf)	255	(57.3)
Max. Cont. Force [Passive cooling/ Fan / Fluid]	N	(lbf)	35 / 67 / -	(7.8 / 15 / -)
Max. Border Force relative	%		67	
Force Constant	N/A_{pk}	(lbf/A_{pk})	17	(3.82)
Velocity				
Max. Velocity @ 48VDC	m/s	(in/s)	2.5	(99.9)
Max. Velocity @ 72VDC	m/s	(in/s)	3.8	(149.9)
Position Detection				
Repeatability	mm	(in)	±0.05	(±0.002)
Linearity	%		± 0.15	
Electrical Data				
Max. Current @ 48VDC	A_{pk}		14.9	
Max. Current @ 72VDC	A_{pk}		14.9	
Max. Cont. Current [Passive cooling /Fan / Fluid]	A_{pk}		2.1 / 3.9 / -	
Thermal Data				
Max. Winding Temperature (Sensor)	°C		120	
Thermal Resistance [Passive cooling / Fan / Fluid]	°K/W		5.5 / 1.5 / -	
Thermal Time Constant [Passive cooling / Fan / Fluid]	s		2200 / 600 / -	
Mechanical Data				
Slider Length	mm	(in)	1400	(55)
Slider Mass	g	(lb)	3160	(6.95)

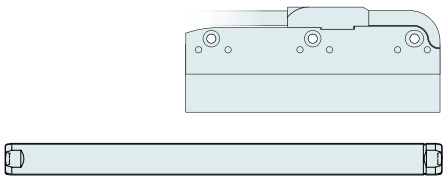

Item	Description	Item-No.
PS01-37Sx120F-HP-N	Stator HP, Cable -90°, 0°, +90°	0150-1296

PL01-20x1400/1340-HP	Slider 'High Performance'	0150-1516
PL01-20x1400/1340-HP-L*	Slider 'High Performance L'	on request

* With this slider, the motor specifications above change.

P01-37Sx120F/1400x1480-HP

Max. Stroke: 1480 mm
Peak Force: 255 N

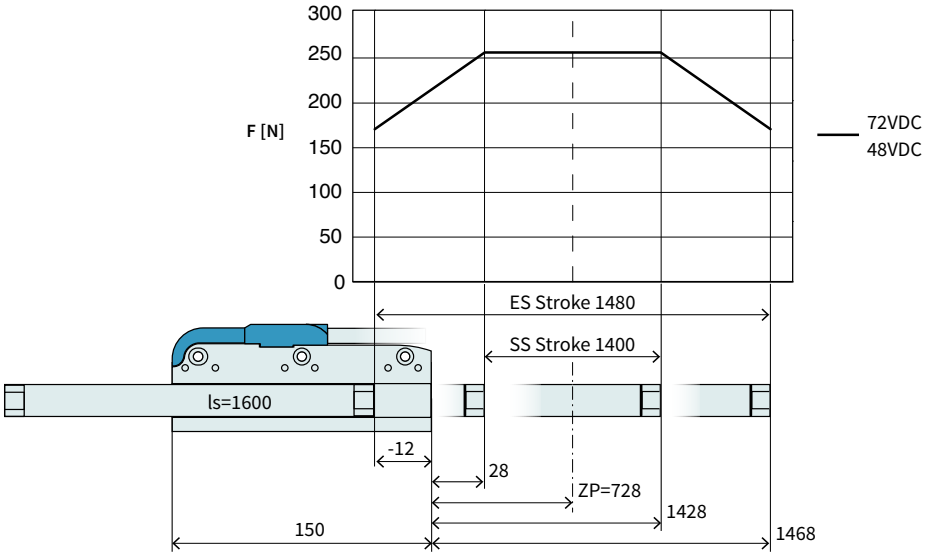

Dimensions in mm

Technical Data P01-37Sx120F/1400x1480-HP				
Stroke				
Standard Stroke (SS)	mm	(in)	1400	(55.1)
Extended Stroke (ES)	mm	(in)	1480	(58.29)
Force				
Max. Force @ 48VDC	N	(lbf)	255	(57.3)
Max. Force @ 72VDC	N	(lbf)	255	(57.3)
Max. Cont. Force [Passive cooling/ Fan / Fluid]	N	(lbf)	35 / 67 / -	(7.8 / 15 / -)
Max. Border Force relative	%		67	
Force Constant	N/A_{pk}	(lbf/A_{pk})	17	(3.82)
Velocity				
Max. Velocity @ 48VDC	m/s	(in/s)	2.5	(99.9)
Max. Velocity @ 72VDC	m/s	(in/s)	3.8	(149.9)
Position Detection				
Repeatability	mm	(in)	±0.05	(±0.002)
Linearity	%		± 0.15	
Electrical Data				
Max. Current @ 48VDC	A_{pk}		14.9	
Max. Current @ 72VDC	A_{pk}		14.9	
Max. Cont. Current [Passive cooling /Fan / Fluid]	A_{pk}		2.1 / 3.9 / -	
Thermal Data				
Max. Winding Temperature (Sensor)	°C		120	
Thermal Resistance [Passive cooling / Fan / Fluid]	°K/W		5.5 / 1.5 / -	
Thermal Time Constant [Passive cooling / Fan / Fluid]	s		2200 / 600 / -	
Mechanical Data				
Slider Length	mm	(in)	1600	(63)
Slider Mass	g	(lb)	3620	(7.96)

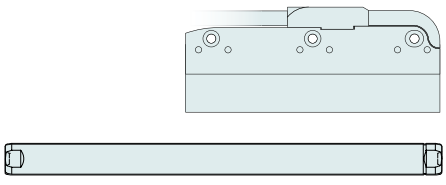

Item	Description	Item-No.
PS01-37Sx120F-HP-N	Stator HP, Cable -90°, 0°, +90°	0150-1296

PL01-20x1600/1540-HP	Slider 'High Performance'	0150-1517
PL01-20x1600/1540-HP-L*	Slider 'High Performance L'	on request

* With this slider, the motor specifications above change.

Motor Cable

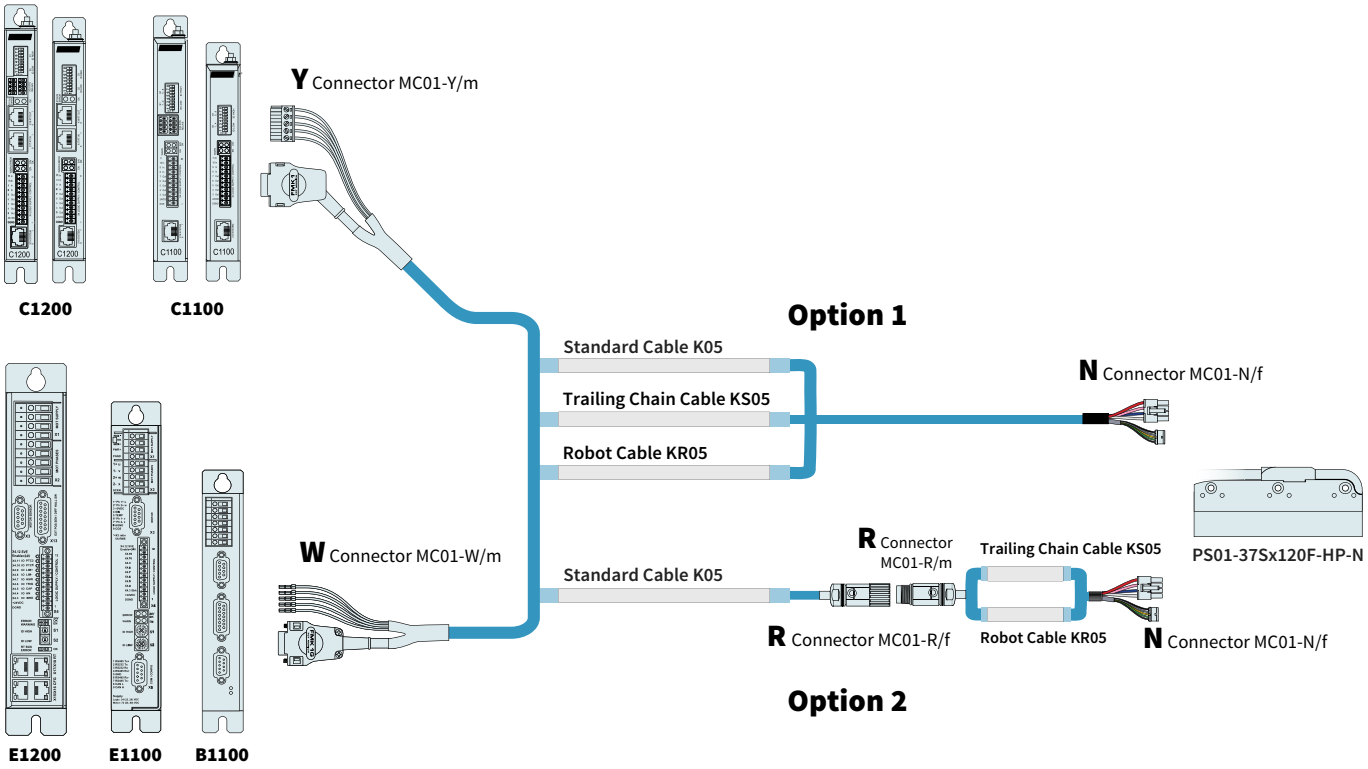

ORDERING INFORMATION

OPTION 1		
Item	**Description**	**Item-No.**
K05-W/N-	Motor Cable W/N, Custom length	0150-3756
K05-Y-Fe/N-	Motor Cable Y/N, Custom length	0150-3503
KS05-W/N-2	Trailing Chain Cable W/N, 2 m	0150-2296
KS05-W/N-4	Trailing Chain Cable W/N, 4 m	0150-2297
KS05-W/N-6	Trailing Chain Cable W/N, 6 m	0150-2298
KS05-W/N-8	Trailing Chain Cable W/N, 8 m	0150-2299
KS05-W/N-	Trailing Chain Cable W/N, Custom length	0150-3412
KS05-Y/N-2	Trailing Chain Cable Y/N, 2 m	0150-2442
KS05-Y/N-4	Trailing Chain Cable Y/N, 4 m	0150-2443
KS05-Y/N-6	Trailing Chain Cable Y/N, 6 m	0150-2444
KS05-Y/N-8	Trailing Chain Cable Y/N, 8 m	0150-2445
KS05-Y-Fe/N-	Trailing Chain Cable Y/N, Custom length	0150-3509
KR05-W/N-	Robot Cable W/N, Custom length	0150-3406
KR05-Y-Fe/N-	Robot Cable Y/N, Custom length	0150-3514

OPTION 2		
Item	**Description**	**Item-No.**
K05-W/R-2	Motor Cable W/R, 2 m	0150-2119
K05-W/R-4	Motor Cable W/R, 4 m	0150-2120
K05-W/R-6	Motor Cable W/R, 6 m	0150-2121
K05-W/R-8	Motor Cable W/R, 8 m	0150-2122
K05-W/R-	Motor Cable W/R, Custom length	0150-3262
K05-Y/R-2	Motor Cable Y/R, 2 m	0150-2421
K05-Y/R-4	Motor Cable Y/R, 4 m	0150-2422
K05-Y/R-6	Motor Cable Y/R, 6 m	0150-2423
K05-Y/R-8	Motor Cable Y/R, 8 m	0150-2424
K05-Y-Fe/R-	Motor Cable Y/R, Custom length	0150-3501
KS05-R/N-	Trailing Chain Cable R/N, Custom length	0150-3486
KR05-R/N-	Robot Cable R/N, Custom length	0150-3757

CONNECTOR & CABLE (INDIVIDUAL)		
Item	**Description**	**Item-No.**
MC01-W/m	Motor Connector W/m	0150-3140
MC01-Y-Fe/m	Motor Connector Y-Fe/m	0150-3289
MC01-R/f	Motor Connector R/f	0150-3129
MC01-N/f	Motor Connector N/f	0150-3407
K05-04/05	Motor Cable per m	0150-1920
KS05-04/05	Trailing Chain Cable per m	0150-1938
KR05-04/05	Robot Cable per m	0150-1846

SLIDER MOUNTING





Item	Description	Item-No.
PLF01-20	Fixed Bearing Set for 19/20 mm sliders	0150-3083
PLF01-20-SS	Fixed Bearing Set for 19/20 mm sliders, stainless steel	0150-3296
PLL01-19	Floating Bearing for 19 mm sliders	0150-3335
PLL01-20	Floating Bearing for 20 mm sliders	0150-3084
PLM01-20-MK	Mounting Kit for 20 mm sliders	0150-3079

FIND MORE PRODUCT DETAILS IN THE CHAPTER "ACCESSORIES".

EXTERNAL POSITION SENSORS

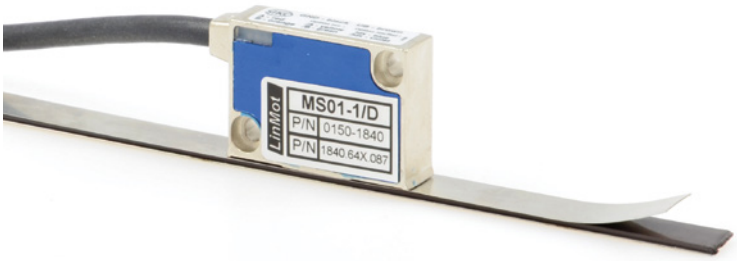

Item	Description	Item-No.
MS01-1/D	Linear Encoder 1µm, A/B (for inc. strip)	0150-1840
MB01-1000	Magnetic incremental strip for MS01-1/D, per cm	0150-1963
KS025-D/D-Encoder	Encoder Cable (Length in m)	0150-3166
KS025-D/D15-Encoder	Encoder Cable (Length in m)	0150-3168

FIND MORE PRODUCT DETAILS IN THE CHAPTER "ACCESSORIES".



Item	Description	Item-No.
MS01-1/D-SSI	Linear Encoder 1µm, A/B (for absolute strip)	0150-2095
MB01-1000-ABS	Magnetic absolute strip for MS01-1/D-SSI (per cm)	0150-2096
EC01-ABS/ENC-12-S	MS01-1/D-SSI Encoder connector straight	0150-3616
KSS01-12-D15/ABS-ENC	Special cable for MS01-1/D-SSI on C1100/C1200/C1400/E1200/E1400 Drives	0150-3652

FIND MORE PRODUCT DETAILS IN THE CHAPTER "ACCESSORIES".

LINEAR MOTORS P01-37x240



- Highly dynamic drives
- Wide stroke range
- Available with cable outlet or with rotatable connector
- Optional with air cooling
- Wide range of applications in handling modules as well as in plant and machine construction

LINEAR MOTORS P01-37x240

Technical Data ____ **271**

Motor Specifications

P01-37x240/80x120-LC **274**

P01-37x240/20x180-LC **275**

P01-37x240/80x280-LC **276**

P01-37x240/180x380-LC **277**

P01-37x240/280x480-LC **278**

P01-37x240/380x580-LC **279**

P01-37x240/480x680-LC **280**

P01-37x240/580x780-LC **281**

P01-37x240/680x880-LC **282**

P01-37x240/880x1080-LC **283**

P01-37x240/1080x1280-LC **284**

P01-37x240/1280x1480-LC **285**

Linear Guides ____ **286**

Accessories ____ **288**



MOTOR FAMILY P01-37x240

Technical Data				
Stroke				
Standard Stroke (SS)	mm	(in)	≤ 1280	(≤ 50.4)
Extended Stroke (ES)	mm	(in)	≤ 1480	(≤ 58.3)
Force				
Max. Force @ 48VDC	N	(lbf)	136	(30.5)
Max. Force @ 72VDC	N	(lbf)	203	(45.7)
Max. Cont. Force [Passive cooling/ Fan / Fluid]	N	(lbf)	52 / 96 / -	(12 / 22 / -)
Max. Border Force relative	%		≤ 88	
Force Constant	N/A_{pk}	(lbf/A_{pk})	40.8	(9.17)
Velocity				
Max. Velocity @ 48VDC	m/s	(in/s)	1.6	(63.9)
Max. Velocity @ 72VDC	m/s	(in/s)	2.3	(95.9)
Position Detection				
Position Resolution	mm	(in)	0.005	(0.0002)
Repeatability	mm	(in)	±0.05	(±0.002)
Position Resolution with ES	mm	(in)	0.001	(0.00004)
Repeatability with ES	mm	(in)	±0.01	(±0.0004)
Linearity with ES	mm	(in)	±0.01	(±0.0004)
Electrical Data				
Max. Current @ 48VDC	A_{pk}		3.3	
Max. Current @ 72VDC	A_{pk}		4.9	
Max. Cont. Current [Passive cooling /Fan / Fluid]	A_{pk}		1.3 / 2.3 / -	
Terminal Resistance 25 °C / 120 °C	Ohm		12 / 16	
Terminal Inductivity	mH		6	
Magnetic Period	mm	(in)	40	(1.57)
Thermal Data				
Max. Winding Temperature (Sensor)	°C		90	
Thermal Resistance [Passive cooling / Fan / Fluid]	°K/W		2.1 / 0.61 / -	
Thermal Time Constant [Passive cooling / Fan / Fluid]	s		1400 / 410 / -	
Mechanical Data				
Stator Diameter	mm	(in)	37	(1.5)
Stator Length [Connector type / Cable type]	mm	(in)	336 / 347	(13 / 14)
Stator Mass	g	(lb)	1385	(3.0)
Slider Diameter	mm	(in)	20	(0.79)
Slider Length	mm	(in)	240 - 1600	(9.4 - 63)
Slider Mass	g	(lb)	490 - 3620	(1.1 - 7.96)
IP Code			IP 65	

STATOR CONNECTOR TYPE

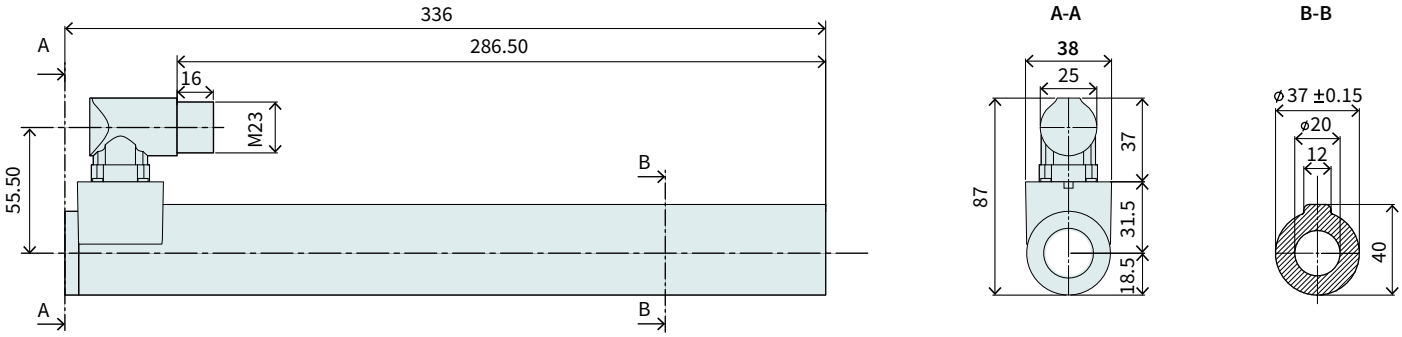

Item	Description	Item-No.
PS01-37x240-C	Stator with IP67 Connector M23/9(m)	0150-1224

STATOR CABLE TYPE

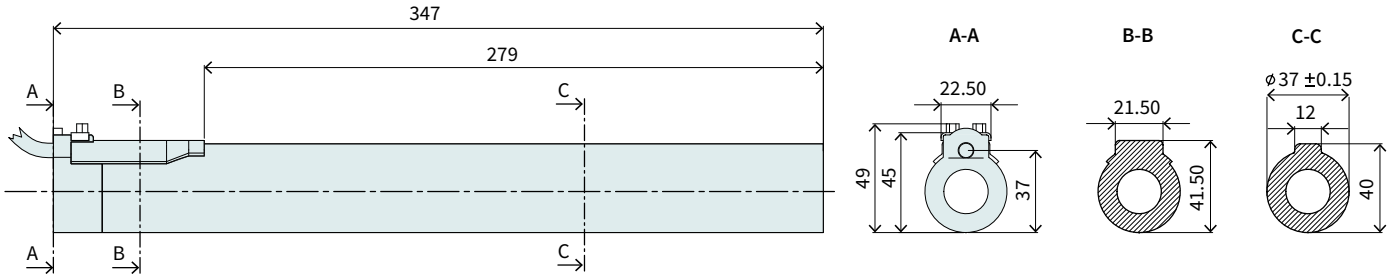

Item	Description	Item-No.
PS01-37x240	Stator, 1.5m Cable, Connector P/10(m)	0150-1203
PS01-37x240-C20	Stator, 0.2m Cable, IP67 St. M23/9(m)	0150-1238

CONNECTOR

Motor Connector Wiring	PS01-37x240-C PS01-37x240-C20	PS01-37x240	Wire color motor cable
	C-Connector	P-Connector	
Ph 1+	A	1	red
Ph 1-	B	2	pink
Ph 2+	C	3	blue
Ph 2-	D	4	grey
+5VDC	E	5	white
GND	F	6	inner shield
Sin	G	7	yellow
Cos	H	8	green
Temp.	L	9	black
Shield	Housing	10	outer Shield

C-Connector

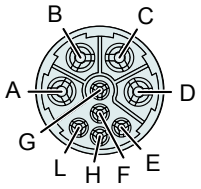

View: Motor Connector, plug side

P-Connector

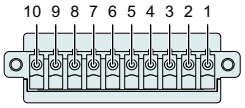

SLIDER

Slider Standard / Heavy Duty

Number of grooves determines the slider type
(see chapter 2 / slider) and marks the front end.

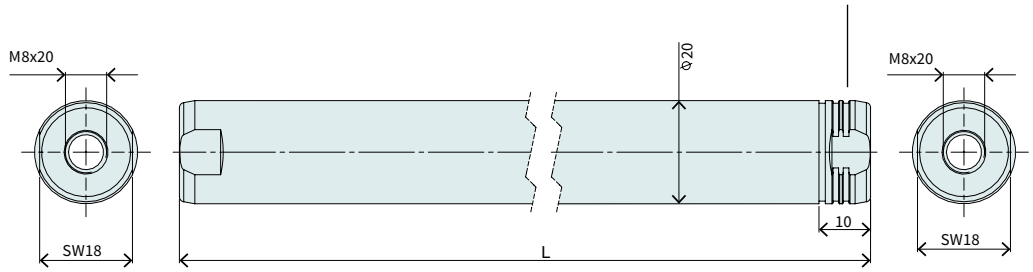

High-Clearance Slider

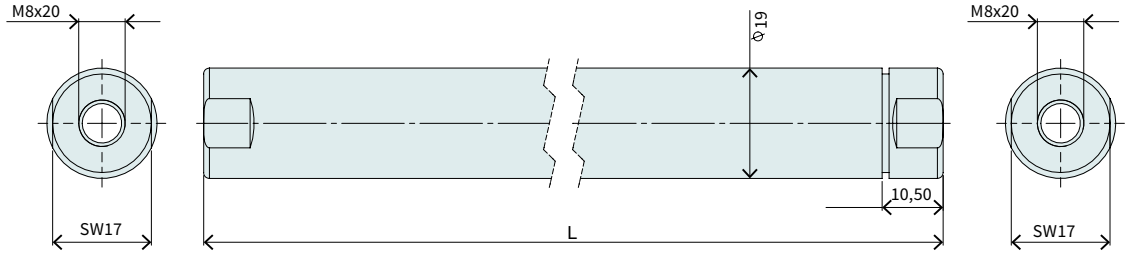

Slider Standard				
Item	Description	Max. Stroke [mm]	Standard Stroke [mm]	Item-No.
PL01-20x240/180-LC	Slider 'standard LC'	120	40	0150-2560
PL01-20x300/240-LC	Slider 'standard LC'	180	100	0150-2561
PL01-20x400/340-LC	Slider 'standard LC'	280	200	0150-2562
PL01-20x500/440-LC	Slider 'standard LC'	380	300	0150-2563
PL01-20x600/540-LC	Slider 'standard LC'	480	400	0150-2564
PL01-20x700/640-LC	Slider 'standard LC'	580	500	0150-2565
PL01-20x800/740-LC	Slider 'standard LC'	680	600	0150-2566
PL01-20x900/840-LC	Slider 'standard LC'	780	700	0150-2567
PL01-20x1000/940-LC	Slider 'standard LC'	880	800	0150-2568
PL01-20x1200/1140-LC	Slider 'standard LC'	1080	1000	0150-2569
PL01-20x1400/1340-LC	Slider 'standard LC'	1280	1200	0150-2570
PL01-20x1600/1540-LC	Slider 'standard LC'	1480	1400	0150-2571

Slider Heavy Duty				
Item	Description	Max. Stroke [mm]	Standard Stroke [mm]	Item-No.
PL02-20x240/180-LC	Slider 'heavy duty LC'	120	40	0150-2572
PL02-20x300/240-LC	Slider 'heavy duty LC'	180	100	0150-2573
PL02-20x400/340-LC	Slider 'heavy duty LC'	280	200	0150-2574
PL02-20x500/440-LC	Slider 'heavy duty LC'	380	300	0150-2575
PL02-20x600/540-LC	Slider 'heavy duty LC'	480	400	0150-2576
PL02-20x700/640-LC	Slider 'heavy duty LC'	580	500	0150-2577
PL02-20x800/740-LC	Slider 'heavy duty LC'	680	600	0150-2578
PL02-20x900/840-LC	Slider 'heavy duty LC'	780	700	0150-2579

High-Clearance Slider				
Item	Description	Max. Stroke [mm]	Standard Stroke [mm]	Item-No.
PL01-19x240/160	Slider 'high clearance'	100	80	0150-1448
PL01-19x300/220	Slider 'high clearance'	160	140	0150-1449
PL01-19x395/320	Slider 'high clearance'	260	240	0150-1452
PL01-19x500/420	Slider 'high clearance'	360	340	0150-1455
PL01-19x600/520	Slider 'high clearance'	460	440	0150-1456
PL01-19x700/620	Slider 'high clearance'	560	540	0150-1457

P01-37x240/80x120-LC

Max. Stroke: 120 mm
Peak Force: 136 N

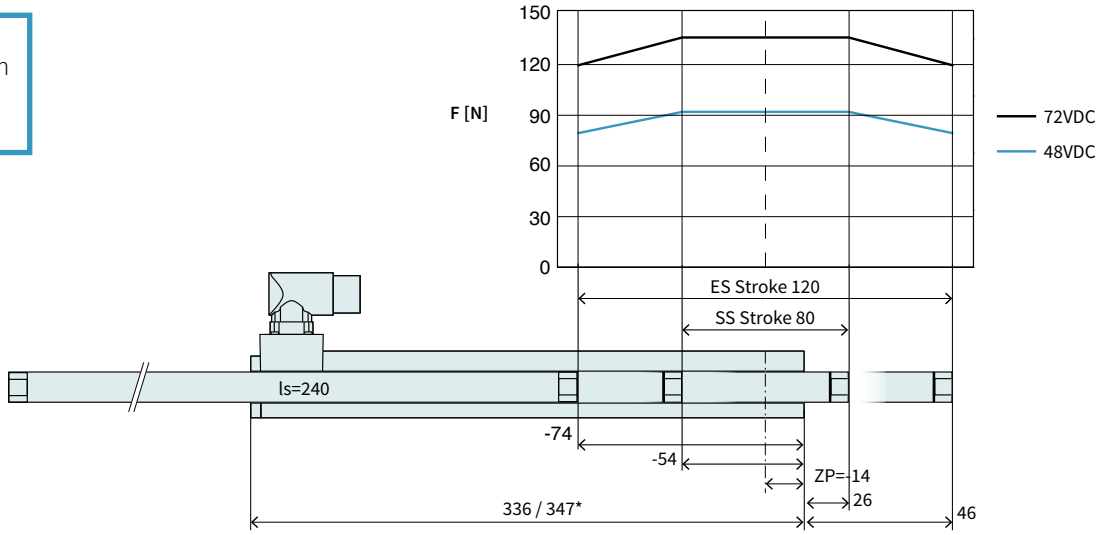

Dimensions in mm
*Cable Type

Technical Data P01-37x240/80x120-LC				
Stroke				
Standard Stroke (SS)	mm	(in)	80	(3.14)
Extended Stroke (ES)	mm	(in)	120	(4.71)
Force				
Max. Force @ 48VDC	N	(lbf)	90.4	(20.3)
Max. Force @ 72VDC	N	(lbf)	136	(30.5)
Max. Cont. Force [Passive cooling/ Fan / Fluid]	N	(lbf)	35 / 64 / -	(7.8 / 14 / -)
Max. Border Force relative	%		88	
Force Constant	N/A_{pk}	(lbf/A_{pk})	27.2	(6.11)
Velocity				
Max. Velocity @ 48VDC	m/s	(in/s)	1.6	(63.9)
Max. Velocity @ 72VDC	m/s	(in/s)	2.3	(95.9)
Position Detection				
Repeatability	mm	(in)	±0.05	(±0.002)
Linearity	%		± 0.5	
Electrical Data				
Max. Current @ 48VDC	A_{pk}		3.3	
Max. Current @ 72VDC	A_{pk}		4.9	
Max. Cont. Current [Passive cooling /Fan / Fluid]	A_{pk}		1.3 / 2.3 / -	
Thermal Data				
Max. Winding Temperature (Sensor)	°C		90	
Thermal Resistance [Passive cooling / Fan / Fluid]	°K/W		2.1 / 0.61 / -	
Thermal Time Constant [Passive cooling / Fan / Fluid]	s		1400 / 410 / -	
Mechanical Data				
Slider Length	mm	(in)	240	(9.4)
Slider Mass	g	(lb)	490	(1.08)







Item	Description	Item-No.
PS01-37x240-C	Stator with IP67 Connector M23/9(m)	0150-1224
PS01-37x240	Stator, 1.5m Cable, Connector P/10(m)	0150-1203
PS01-37x240-C20	Stator, 0.2m Cable, IP67 St. M23/9(m)	0150-1238
PL01-20x240/180-LC	Slider 'standard LC'	0150-2560
PL02-20x240/180-LC	Slider 'heavy duty LC'	0150-2572
PL01-19x240/160*	Slider 'high clearance'	0150-1448

* With this slider, the motor specifications above change.

P01-37x240/20x180-LC

Max. Stroke: 180 mm
Peak Force: 186 N

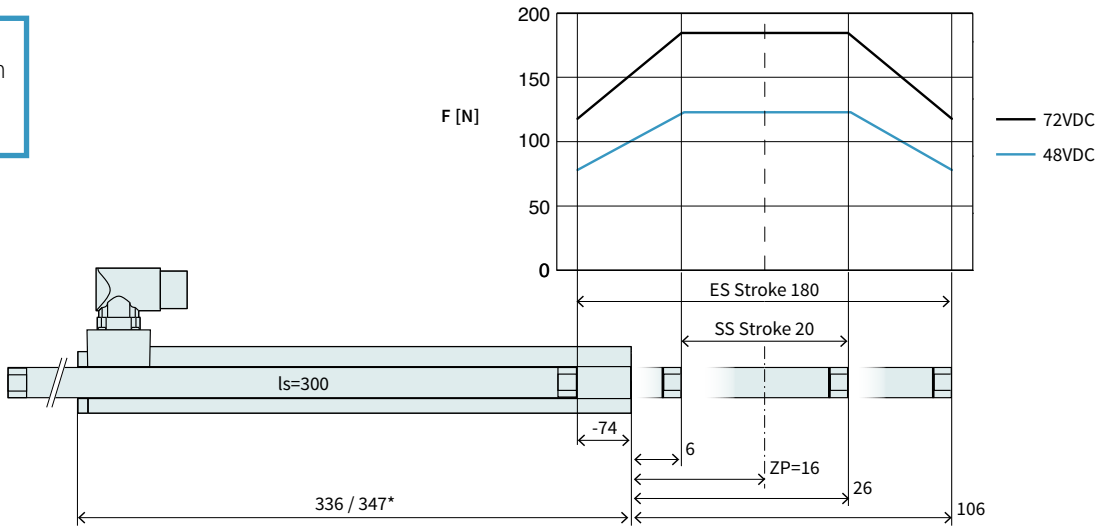

Dimensions in mm
*Cable Type

Technical Data P01-37x240/20x180-LC				
Stroke				
Standard Stroke (SS)	mm	(in)	20	(0.78)
Extended Stroke (ES)	mm	(in)	180	(7.08)
Force				
Max. Force @ 48VDC	N	(lbf)	124	(27.9)
Max. Force @ 72VDC	N	(lbf)	186	(41.9)
Max. Cont. Force [Passive cooling/ Fan / Fluid]	N	(lbf)	48 / 88 / -	(11 / 20 / -)
Max. Border Force relative	%		64	
Force Constant	N/A_{pk}	(lbf/A_{pk})	37.4	(8.41)
Velocity				
Max. Velocity @ 48VDC	m/s	(in/s)	1.1	(45.9)
Max. Velocity @ 72VDC	m/s	(in/s)	1.7	(69.9)
Position Detection				
Repeatability	mm	(in)	±0.05	(±0.002)
Linearity	%		± 0.4	
Electrical Data				
Max. Current @ 48VDC	A_{pk}		3.3	
Max. Current @ 72VDC	A_{pk}		4.9	
Max. Cont. Current [Passive cooling /Fan / Fluid]	A_{pk}		1.3 / 2.3 / -	
Thermal Data				
Max. Winding Temperature (Sensor)	°C		90	
Thermal Resistance [Passive cooling / Fan / Fluid]	°K/W		2.1 / 0.61 / -	
Thermal Time Constant [Passive cooling / Fan / Fluid]	s		1400 / 410 / -	
Mechanical Data				
Slider Length	mm	(in)	300	(12)
Slider Mass	g	(lb)	630	(1.39)

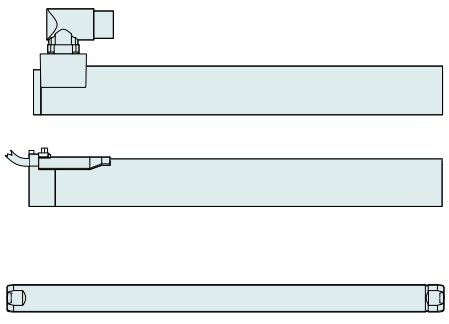

Item	Description	Item-No.
PS01-37x240-C	Stator with IP67 Connector M23/9(m)	0150-1224
PS01-37x240	Stator, 1.5m Cable, Connector P/10(m)	0150-1203
PS01-37x240-C20	Stator, 0.2m Cable, IP67 St. M23/9(m)	0150-1238
PL01-20x300/240-LC	Slider 'standard LC'	0150-2561
PL02-20x300/240-LC	Slider 'heavy duty LC'	0150-2573
PL01-19x300/220*	Slider 'high clearance'	0150-1449

* With this slider, the motor specifications above change.

P01-37x240/80x280-LC

Max. Stroke: 280 mm
Peak Force: 203 N

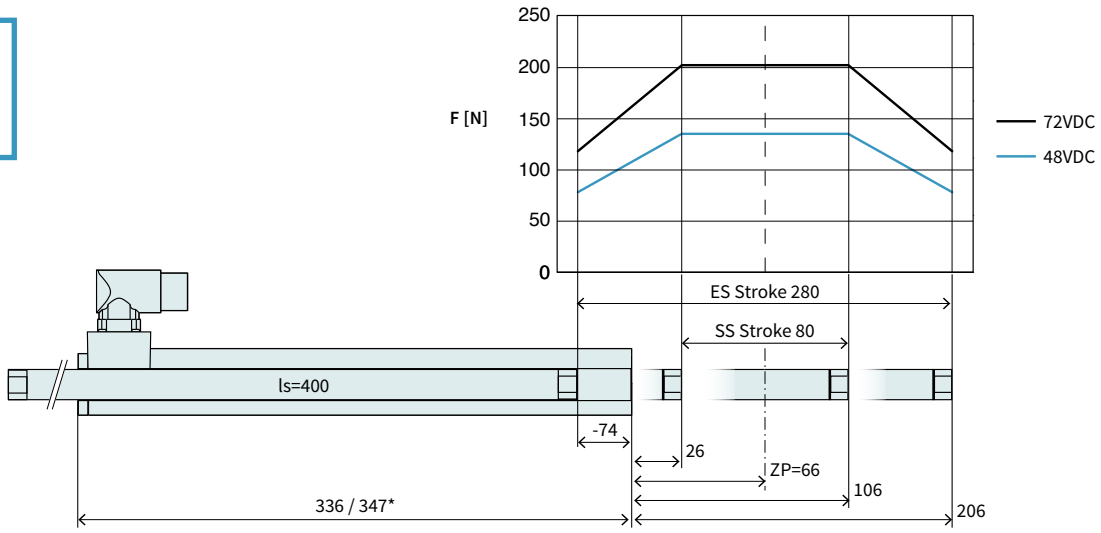

Dimensions in mm
*Cable Type

Technical Data P01-37x240/80x280-LC				
Stroke				
Standard Stroke (SS)	mm	(in)	80	(3.14)
Extended Stroke (ES)	mm	(in)	280	(10.99)
Force				
Max. Force @ 48VDC	N	(lbf)	136	(30.5)
Max. Force @ 72VDC	N	(lbf)	203	(45.7)
Max. Cont. Force [Passive cooling/ Fan / Fluid]	N	(lbf)	52 / 96 / -	(12 / 22 / -)
Max. Border Force relative	%		58	
Force Constant	N/A_{pk}	(lbf/A_{pk})	40.8	(9.17)
Velocity				
Max. Velocity @ 48VDC	m/s	(in/s)	1.1	(42.9)
Max. Velocity @ 72VDC	m/s	(in/s)	1.6	(63.9)
Position Detection				
Repeatability	mm	(in)	±0.05	(±0.002)
Linearity	%		± 0.3	
Electrical Data				
Max. Current @ 48VDC	A_{pk}		3.3	
Max. Current @ 72VDC	A_{pk}		4.9	
Max. Cont. Current [Passive cooling /Fan / Fluid]	A_{pk}		1.3 / 2.3 / -	
Thermal Data				
Max. Winding Temperature (Sensor)	°C		90	
Thermal Resistance [Passive cooling / Fan / Fluid]	°K/W		2.1 / 0.61 / -	
Thermal Time Constant [Passive cooling / Fan / Fluid]	s		1400 / 410 / -	
Mechanical Data				
Slider Length	mm	(in)	400	(16)
Slider Mass	g	(lb)	860	(1.9)







Item	Description	Item-No.
PS01-37x240-C	Stator with IP67 Connector M23/9(m)	0150-1224
PS01-37x240	Stator, 1.5m Cable, Connector P/10(m)	0150-1203
PS01-37x240-C20	Stator, 0.2m Cable, IP67 St. M23/9(m)	0150-1238
PL01-20x400/340-LC	Slider 'standard LC'	0150-2562
PL02-20x400/340-LC	Slider 'heavy duty LC'	0150-2574
PL01-19x395/320*	Slider 'high clearance'	0150-1452

* With this slider, the motor specifications above change.

P01-37x240/180x380-LC

Max. Stroke: 380 mm
Peak Force: 203 N

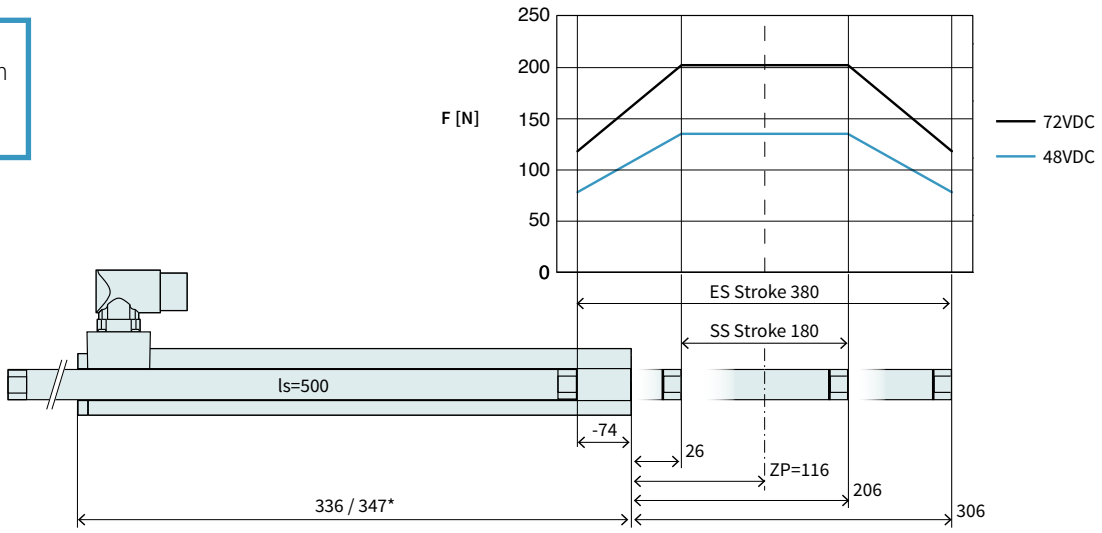

Dimensions in mm
*Cable Type

Technical Data P01-37x240/180x380-LC				
Stroke				
Standard Stroke (SS)	mm	(in)	180	(7.08)
Extended Stroke (ES)	mm	(in)	380	(14.99)
Force				
Max. Force @ 48VDC	N	(lbf)	136	(30.5)
Max. Force @ 72VDC	N	(lbf)	203	(45.7)
Max. Cont. Force [Passive cooling/ Fan / Fluid]	N	(lbf)	52 / 96 / -	(12 / 22 / -)
Max. Border Force relative	%		58	
Force Constant	N/A_{pk}	(lbf/A_{pk})	40.8	(9.17)
Velocity				
Max. Velocity @ 48VDC	m/s	(in/s)	1.1	(42.9)
Max. Velocity @ 72VDC	m/s	(in/s)	1.6	(63.9)
Position Detection				
Repeatability	mm	(in)	±0.05	(±0.002)
Linearity	%		± 0.25	
Electrical Data				
Max. Current @ 48VDC	A_{pk}		3.3	
Max. Current @ 72VDC	A_{pk}		4.9	
Max. Cont. Current [Passive cooling /Fan / Fluid]	A_{pk}		1.3 / 2.3 / -	
Thermal Data				
Max. Winding Temperature (Sensor)	°C		90	
Thermal Resistance [Passive cooling / Fan / Fluid]	°K/W		2.1 / 0.61 / -	
Thermal Time Constant [Passive cooling / Fan / Fluid]	s		1400 / 410 / -	
Mechanical Data				
Slider Length	mm	(in)	500	(20)
Slider Mass	g	(lb)	1090	(2.4)

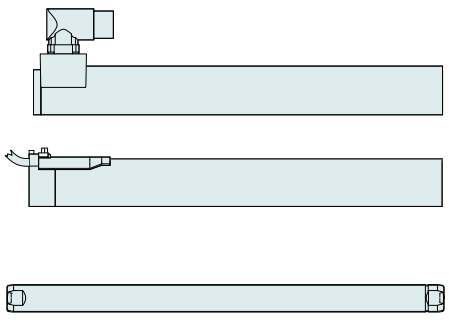

Item	Description	Item-No.
PS01-37x240-C	Stator with IP67 Connector M23/9(m)	0150-1224
PS01-37x240	Stator, 1.5m Cable, Connector P/10(m)	0150-1203
PS01-37x240-C20	Stator, 0.2m Cable, IP67 St. M23/9(m)	0150-1238
PL01-20x500/440-LC	Slider 'standard LC'	0150-2563
PL02-20x500/440-LC	Slider 'heavy duty LC'	0150-2575
PL01-19x500/420*	Slider 'high clearance'	0150-1455

* With this slider, the motor specifications above change.

P01-37x240/280x480-LC

Max. Stroke: 480 mm
Peak Force: 203 N

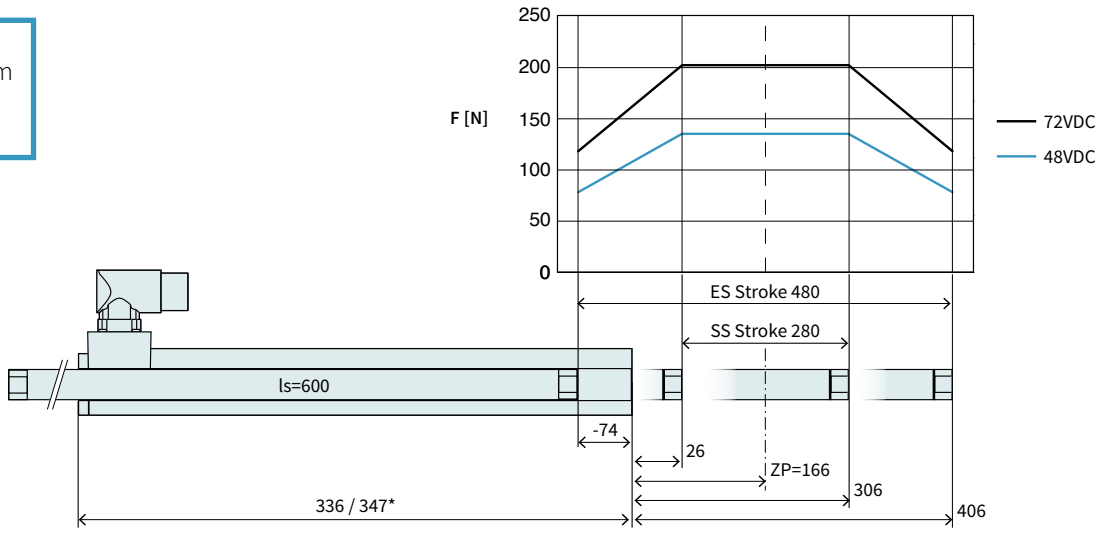

Dimensions in mm
*Cable Type

Technical Data P01-37x240/280x480-LC				
Stroke				
Standard Stroke (SS)	mm	(in)	280	(10.99)
Extended Stroke (ES)	mm	(in)	480	(18.89)
Force				
Max. Force @ 48VDC	N	(lbf)	136	(30.5)
Max. Force @ 72VDC	N	(lbf)	203	(45.7)
Max. Cont. Force [Passive cooling/ Fan / Fluid]	N	(lbf)	52 / 96 / -	(12 / 22 / -)
Max. Border Force relative	%		58	
Force Constant	N/A_{pk}	(lbf/A_{pk})	40.8	(9.17)
Velocity				
Max. Velocity @ 48VDC	m/s	(in/s)	1.1	(42.9)
Max. Velocity @ 72VDC	m/s	(in/s)	1.6	(63.9)
Position Detection				
Repeatability	mm	(in)	±0.05	(±0.002)
Linearity	%		± 0.2	
Electrical Data				
Max. Current @ 48VDC	A_{pk}		3.3	
Max. Current @ 72VDC	A_{pk}		4.9	
Max. Cont. Current [Passive cooling /Fan / Fluid]	A_{pk}		1.3 / 2.3 / -	
Thermal Data				
Max. Winding Temperature (Sensor)	°C		90	
Thermal Resistance [Passive cooling / Fan / Fluid]	°K/W		2.1 / 0.61 / -	
Thermal Time Constant [Passive cooling / Fan / Fluid]	s		1400 / 410 / -	
Mechanical Data				
Slider Length	mm	(in)	600	(24)
Slider Mass	g	(lb)	1330	(2.93)

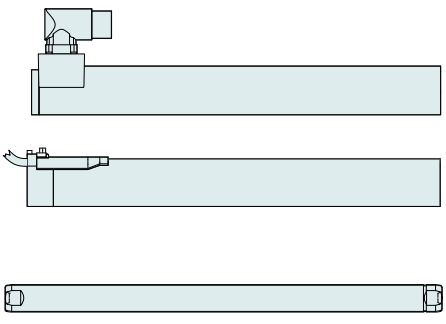

Item	Description	Item-No.
PS01-37x240-C	Stator with IP67 Connector M23/9(m)	0150-1224
PS01-37x240	Stator, 1.5m Cable, Connector P/10(m)	0150-1203
PS01-37x240-C20	Stator, 0.2m Cable, IP67 St. M23/9(m)	0150-1238
PL01-20x600/540-LC	Slider 'standard LC'	0150-2564
PL02-20x600/540-LC	Slider 'heavy duty LC'	0150-2576
PL01-19x600/520*	Slider 'high clearance'	0150-1456

* With this slider, the motor specifications above change.

P01-37x240/380x580-LC

Max. Stroke: 580 mm
Peak Force: 203 N

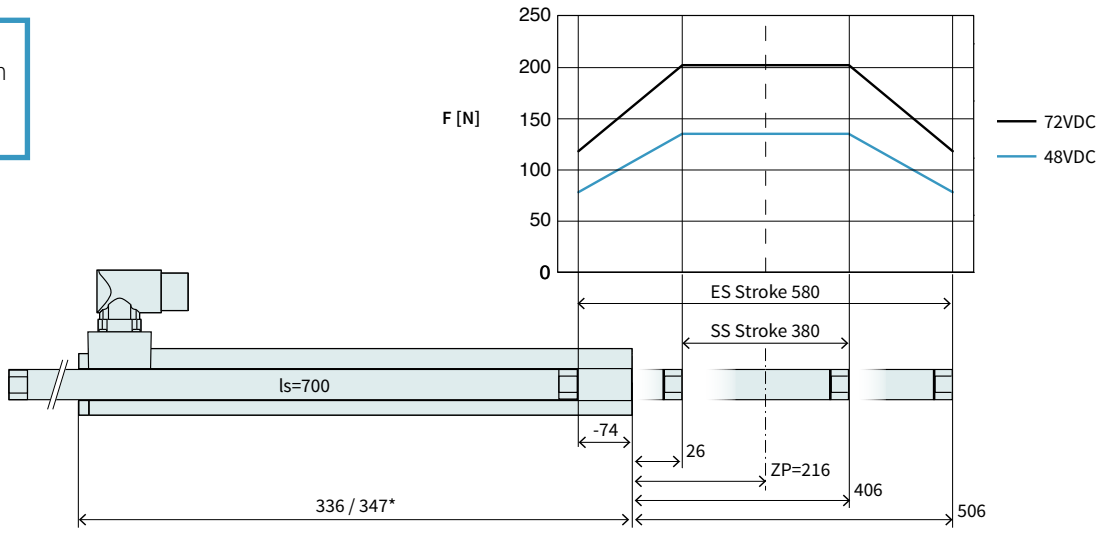

Dimensions in mm
*Cable Type

Technical Data P01-37x240/380x580-LC				
Stroke				
Standard Stroke (SS)	mm	(in)	380	(14.99)
Extended Stroke (ES)	mm	(in)	580	(22.8)
Force				
Max. Force @ 48VDC	N	(lbf)	136	(30.5)
Max. Force @ 72VDC	N	(lbf)	203	(45.7)
Max. Cont. Force [Passive cooling/ Fan / Fluid]	N	(lbf)	52 / 96 / -	(12 / 22 / -)
Max. Border Force relative	%		58	
Force Constant	N/A_{pk}	(lbf/A_{pk})	40.8	(9.17)
Velocity				
Max. Velocity @ 48VDC	m/s	(in/s)	1.1	(42.9)
Max. Velocity @ 72VDC	m/s	(in/s)	1.6	(63.9)
Position Detection				
Repeatability	mm	(in)	±0.05	(±0.002)
Linearity	%		± 0.2	
Electrical Data				
Max. Current @ 48VDC	A_{pk}		3.3	
Max. Current @ 72VDC	A_{pk}		4.9	
Max. Cont. Current [Passive cooling /Fan / Fluid]	A_{pk}		1.3 / 2.3 / -	
Thermal Data				
Max. Winding Temperature (Sensor)	°C		90	
Thermal Resistance [Passive cooling / Fan / Fluid]	°K/W		2.1 / 0.61 / -	
Thermal Time Constant [Passive cooling / Fan / Fluid]	s		1400 / 410 / -	
Mechanical Data				
Slider Length	mm	(in)	700	(28)
Slider Mass	g	(lb)	1560	(3.4)







Item	Description	Item-No.
PS01-37x240-C	Stator with IP67 Connector M23/9(m)	0150-1224
PS01-37x240	Stator, 1.5m Cable, Connector P/10(m)	0150-1203
PS01-37x240-C20	Stator, 0.2m Cable, IP67 St. M23/9(m)	0150-1238
PL01-20x700/640-LC	Slider 'standard LC'	0150-2565
PL02-20x700/640-LC	Slider 'heavy duty LC'	0150-2577
PL01-19x700/620*	Slider 'high clearance'	0150-1457

* With this slider, the motor specifications above change.

P01-37x240/480x680-LC

Max. Stroke: 680 mm
Peak Force: 203 N

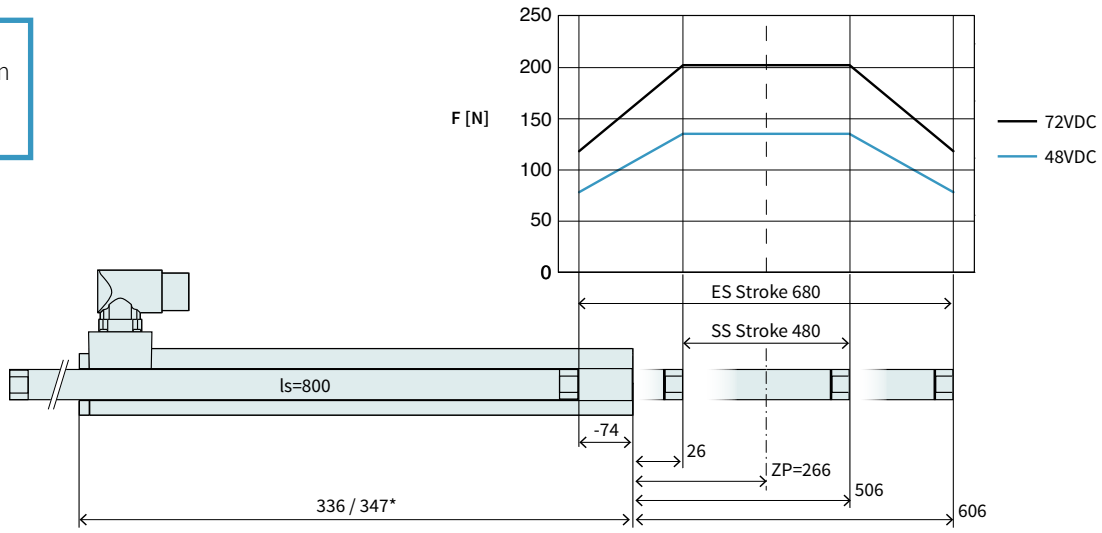

Dimensions in mm
*Cable Type

Technical Data P01-37x240/480x680-LC				
Stroke				
Standard Stroke (SS)	mm	(in)	480	(18.89)
Extended Stroke (ES)	mm	(in)	680	(26.8)
Force				
Max. Force @ 48VDC	N	(lbf)	136	(30.5)
Max. Force @ 72VDC	N	(lbf)	203	(45.7)
Max. Cont. Force [Passive cooling/ Fan / Fluid]	N	(lbf)	52 / 96 / -	(12 / 22 / -)
Max. Border Force relative	%		58	
Force Constant	N/A_{pk}	(lbf/A_{pk})	40.8	(9.17)
Velocity				
Max. Velocity @ 48VDC	m/s	(in/s)	1.1	(42.9)
Max. Velocity @ 72VDC	m/s	(in/s)	1.6	(63.9)
Position Detection				
Repeatability	mm	(in)	±0.05	(±0.002)
Linearity	%		± 0.15	
Electrical Data				
Max. Current @ 48VDC	A_{pk}		3.3	
Max. Current @ 72VDC	A_{pk}		4.9	
Max. Cont. Current [Passive cooling /Fan / Fluid]	A_{pk}		1.3 / 2.3 / -	
Thermal Data				
Max. Winding Temperature (Sensor)	°C		90	
Thermal Resistance [Passive cooling / Fan / Fluid]	°K/W		2.1 / 0.61 / -	
Thermal Time Constant [Passive cooling / Fan / Fluid]	s		1400 / 410 / -	
Mechanical Data				
Slider Length	mm	(in)	800	(31)
Slider Mass	g	(lb)	1790	(3.94)



Item	Description	Item-No.
PS01-37x240-C	Stator with IP67 Connector M23/9(m)	0150-1224



PS01-37x240	Stator, 1.5m Cable, Connector P/10(m)	0150-1203
PS01-37x240-C20	Stator, 0.2m Cable, IP67 St. M23/9(m)	0150-1238



PL01-20x800/740-LC	Slider 'standard LC'	0150-2566
PL02-20x800/740-LC	Slider 'heavy duty LC'	0150-2578

P01-37x240/580x780-LC

Max. Stroke: 780 mm
Peak Force: 203 N

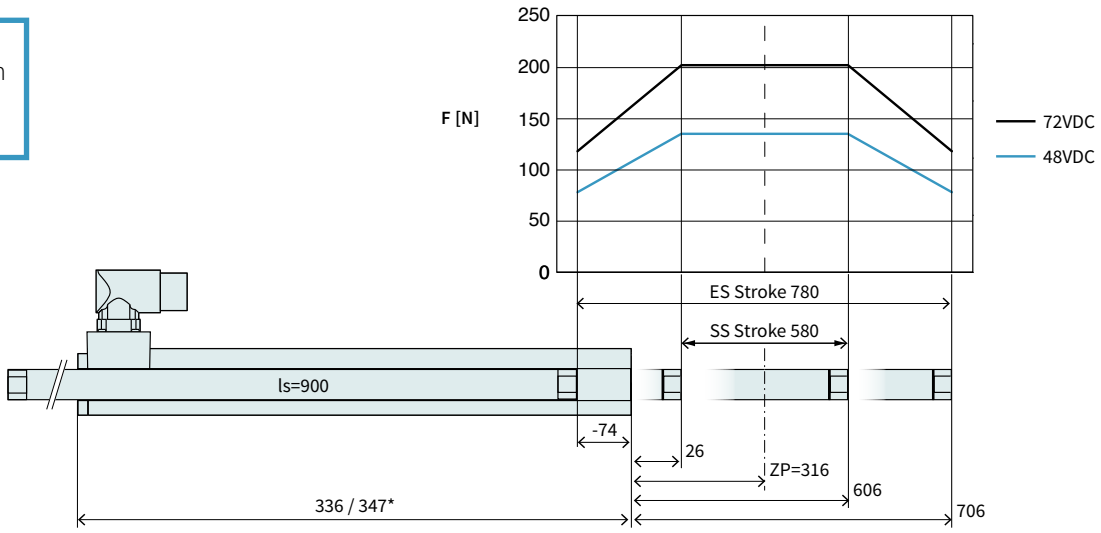

Dimensions in mm
*Cable Type

Technical Data P01-37x240/580x780-LC				
Stroke				
Standard Stroke (SS)	mm	(in)	580	(22.8)
Extended Stroke (ES)	mm	(in)	780	(30.69)
Force				
Max. Force @ 48VDC	N	(lbf)	136	(30.5)
Max. Force @ 72VDC	N	(lbf)	203	(45.7)
Max. Cont. Force [Passive cooling/ Fan / Fluid]	N	(lbf)	52 / 96 / -	(12 / 22 / -)
Max. Border Force relative	%		58	
Force Constant	N/A_{pk}	(lbf/A_{pk})	40.8	(9.17)
Velocity				
Max. Velocity @ 48VDC	m/s	(in/s)	1.1	(42.9)
Max. Velocity @ 72VDC	m/s	(in/s)	1.6	(63.9)
Position Detection				
Repeatability	mm	(in)	±0.05	(±0.002)
Linearity	%		± 0.15	
Electrical Data				
Max. Current @ 48VDC	A_{pk}		3.3	
Max. Current @ 72VDC	A_{pk}		4.9	
Max. Cont. Current [Passive cooling /Fan / Fluid]	A_{pk}		1.3 / 2.3 / -	
Thermal Data				
Max. Winding Temperature (Sensor)	°C		90	
Thermal Resistance [Passive cooling / Fan / Fluid]	°K/W		2.1 / 0.61 / -	
Thermal Time Constant [Passive cooling / Fan / Fluid]	s		1400 / 410 / -	
Mechanical Data				
Slider Length	mm	(in)	900	(35)
Slider Mass	g	(lb)	2020	(4.44)







Item	Description	Item-No.
PS01-37x240-C	Stator with IP67 Connector M23/9(m)	0150-1224
PS01-37x240	Stator, 1.5m Cable, Connector P/10(m)	0150-1203
PS01-37x240-C20	Stator, 0.2m Cable, IP67 St. M23/9(m)	0150-1238
PL01-20x900/840-LC	Slider 'standard LC'	0150-2567
PL02-20x900/840-LC	Slider 'heavy duty LC'	0150-2579

P01-37x240/680x880-LC

Max. Stroke: 880 mm
Peak Force: 203 N

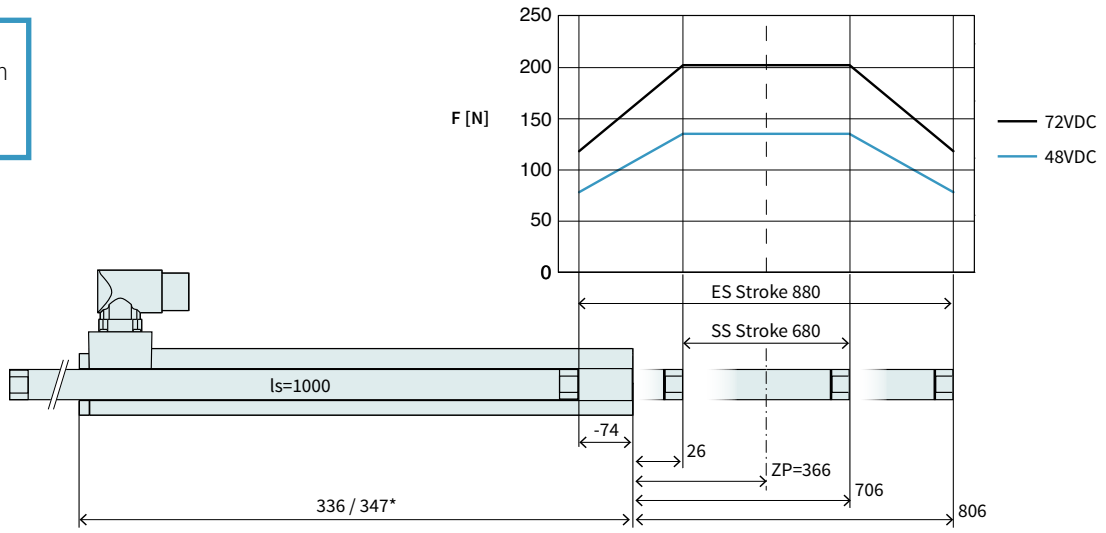

Dimensions in mm
*Cable Type

Technical Data P01-37x240/680x880-LC				
Stroke				
Standard Stroke (SS)	mm	(in)	680	(26.8)
Extended Stroke (ES)	mm	(in)	880	(34.6)
Force				
Max. Force @ 48VDC	N	(lbf)	136	(30.5)
Max. Force @ 72VDC	N	(lbf)	203	(45.7)
Max. Cont. Force [Passive cooling/ Fan / Fluid]	N	(lbf)	52 / 96 / -	(12 / 22 / -)
Max. Border Force relative	%		58	
Force Constant	N/A_{pk}	(lbf/A_{pk})	40.8	(9.17)
Velocity				
Max. Velocity @ 48VDC	m/s	(in/s)	1.1	(42.9)
Max. Velocity @ 72VDC	m/s	(in/s)	1.6	(63.9)
Position Detection				
Repeatability	mm	(in)	±0.05	(±0.002)
Linearity	%		± 0.15	
Electrical Data				
Max. Current @ 48VDC	A_{pk}		3.3	
Max. Current @ 72VDC	A_{pk}		4.9	
Max. Cont. Current [Passive cooling /Fan / Fluid]	A_{pk}		1.3 / 2.3 / -	
Thermal Data				
Max. Winding Temperature (Sensor)	°C		90	
Thermal Resistance [Passive cooling / Fan / Fluid]	°K/W		2.1 / 0.61 / -	
Thermal Time Constant [Passive cooling / Fan / Fluid]	s		1400 / 410 / -	
Mechanical Data				
Slider Length	mm	(in)	1000	(39)
Slider Mass	g	(lb)	2230	(4.91)

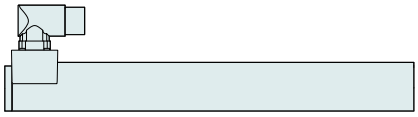





Item	Description	Item-No.
PS01-37x240-C	Stator with IP67 Connector M23/9(m)	0150-1224
PS01-37x240	Stator, 1.5m Cable, Connector P/10(m)	0150-1203
PS01-37x240-C20	Stator, 0.2m Cable, IP67 St. M23/9(m)	0150-1238
PL01-20x1000/940-LC	Slider 'standard LC'	0150-2568

P01-37x240/880x1080-LC

Max. Stroke: 1080 mm
Peak Force: 203 N

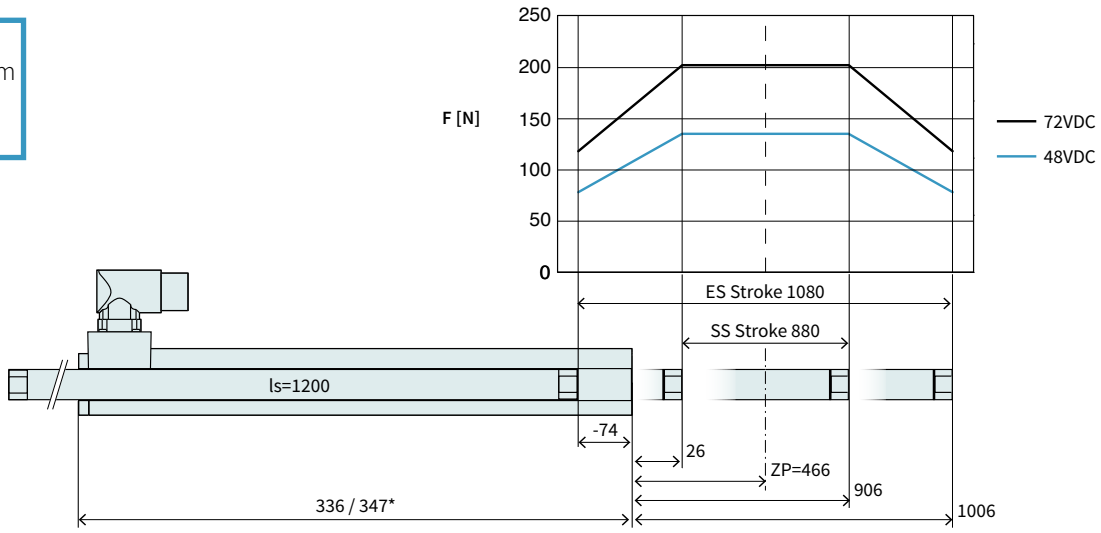

Dimensions in mm
*Cable Type

Technical Data P01-37x240/880x1080-LC				
Stroke				
Standard Stroke (SS)	mm	(in)	880	(34.6)
Extended Stroke (ES)	mm	(in)	1080	(42.49)
Force				
Max. Force @ 48VDC	N	(lbf)	136	(30.5)
Max. Force @ 72VDC	N	(lbf)	203	(45.7)
Max. Cont. Force [Passive cooling/ Fan / Fluid]	N	(lbf)	52 / 96 / -	(12 / 22 / -)
Max. Border Force relative	%		58	
Force Constant	N/A_{pk}	(lbf/A_{pk})	40.8	(9.17)
Velocity				
Max. Velocity @ 48VDC	m/s	(in/s)	1.1	(42.9)
Max. Velocity @ 72VDC	m/s	(in/s)	1.6	(63.9)
Position Detection				
Repeatability	mm	(in)	±0.05	(±0.002)
Linearity	%		± 0.15	
Electrical Data				
Max. Current @ 48VDC	A_{pk}		3.3	
Max. Current @ 72VDC	A_{pk}		4.9	
Max. Cont. Current [Passive cooling /Fan / Fluid]	A_{pk}		1.3 / 2.3 / -	
Thermal Data				
Max. Winding Temperature (Sensor)	°C		90	
Thermal Resistance [Passive cooling / Fan / Fluid]	°K/W		2.1 / 0.61 / -	
Thermal Time Constant [Passive cooling / Fan / Fluid]	s		1400 / 410 / -	
Mechanical Data				
Slider Length	mm	(in)	1200	(47)
Slider Mass	g	(lb)	2690	(5.92)

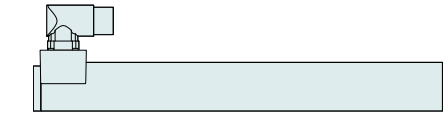





Item	Description	Item-No.
PS01-37x240-C	Stator with IP67 Connector M23/9(m)	0150-1224
PS01-37x240	Stator, 1.5m Cable, Connector P/10(m)	0150-1203
PS01-37x240-C20	Stator, 0.2m Cable, IP67 St. M23/9(m)	0150-1238
PL01-20x1200/1140-LC	Slider 'standard LC'	0150-2569

P01-37x240/1080x1280-LC

Max. Stroke: 1280 mm
Peak Force: 203 N

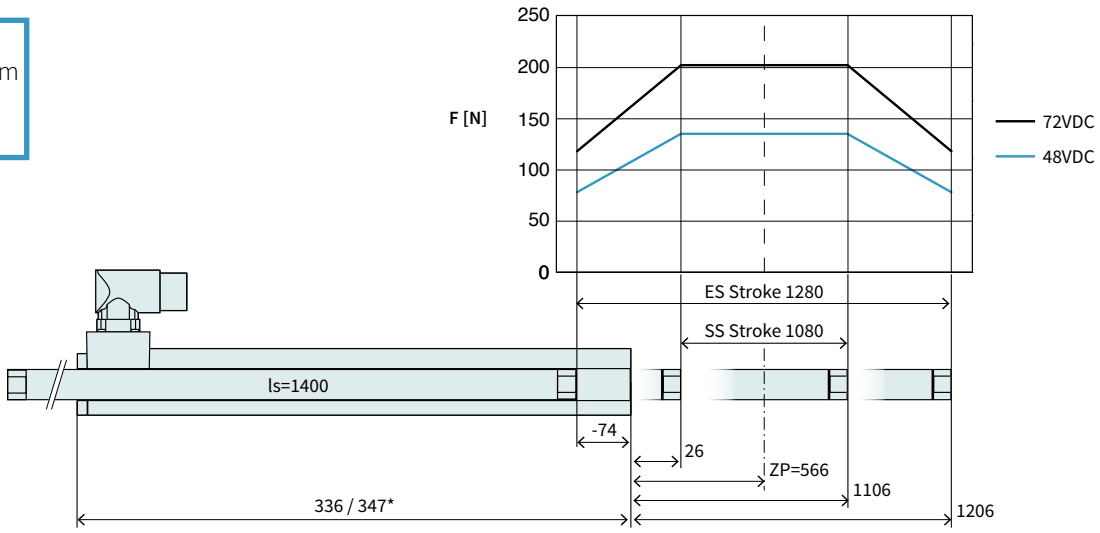

Dimensions in mm
*Cable Type

Technical Data P01-37x240/1080x1280-LC				
Stroke				
Standard Stroke (SS)	mm	(in)	1080	(42.49)
Extended Stroke (ES)	mm	(in)	1280	(50.39)
Force				
Max. Force @ 48VDC	N	(lbf)	136	(30.5)
Max. Force @ 72VDC	N	(lbf)	203	(45.7)
Max. Cont. Force [Passive cooling/ Fan / Fluid]	N	(lbf)	52 / 96 / -	(12 / 22 / -)
Max. Border Force relative	%		58	
Force Constant	N/A_{pk}	(lbf/A_{pk})	40.8	(9.17)
Velocity				
Max. Velocity @ 48VDC	m/s	(in/s)	1.1	(42.9)
Max. Velocity @ 72VDC	m/s	(in/s)	1.6	(63.9)
Position Detection				
Repeatability	mm	(in)	±0.05	(±0.002)
Linearity	%		± 0.15	
Electrical Data				
Max. Current @ 48VDC	A_{pk}		3.3	
Max. Current @ 72VDC	A_{pk}		4.9	
Max. Cont. Current [Passive cooling /Fan / Fluid]	A_{pk}		1.3 / 2.3 / -	
Thermal Data				
Max. Winding Temperature (Sensor)	°C		90	
Thermal Resistance [Passive cooling / Fan / Fluid]	°K/W		2.1 / 0.61 / -	
Thermal Time Constant [Passive cooling / Fan / Fluid]	s		1400 / 410 / -	
Mechanical Data				
Slider Length	mm	(in)	1400	(55)
Slider Mass	g	(lb)	3160	(6.95)







Item	Description	Item-No.
PS01-37x240-C	Stator with IP67 Connector M23/9(m)	0150-1224
PS01-37x240	Stator, 1.5m Cable, Connector P/10(m)	0150-1203
PS01-37x240-C20	Stator, 0.2m Cable, IP67 St. M23/9(m)	0150-1238
PL01-20x1400/1340-LC	Slider 'standard LC'	0150-2570

P01-37x240/1280x1480-LC

Max. Stroke: 1480 mm
Peak Force: 203 N

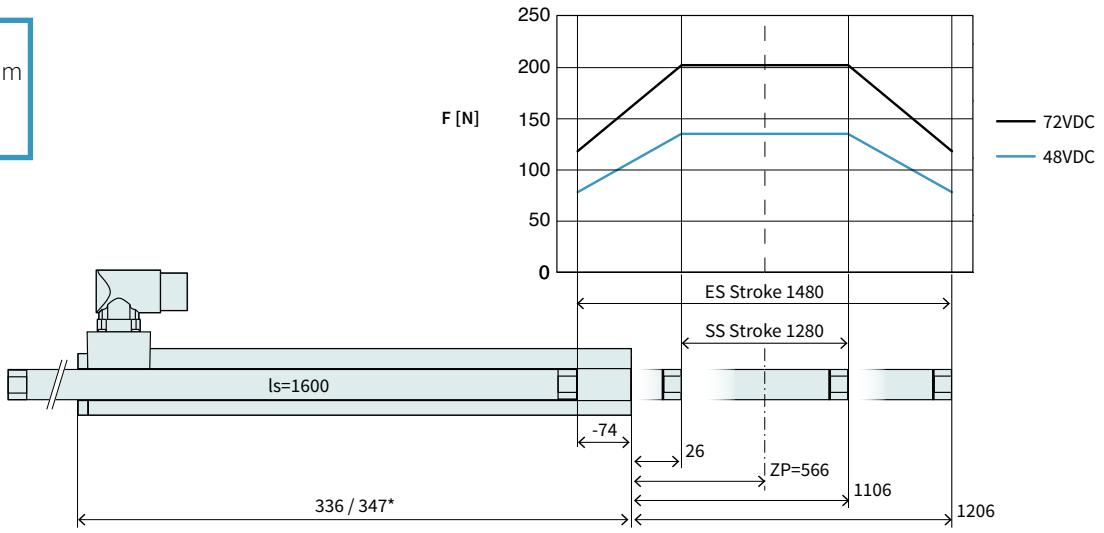

Dimensions in mm
*Cable Type

Technical Data P01-37x240/1280x1480-LC				
Stroke				
Standard Stroke (SS)	mm	(in)	1280	(50.39)
Extended Stroke (ES)	mm	(in)	1480	(58.29)
Force				
Max. Force @ 48VDC	N	(lbf)	136	(30.5)
Max. Force @ 72VDC	N	(lbf)	203	(45.7)
Max. Cont. Force [Passive cooling/ Fan / Fluid]	N	(lbf)	52 / 96 / -	(12 / 22 / -)
Max. Border Force relative	%		58	
Force Constant	N/A_{pk}	(lbf/A_{pk})	40.8	(9.17)
Velocity				
Max. Velocity @ 48VDC	m/s	(in/s)	1.1	(42.9)
Max. Velocity @ 72VDC	m/s	(in/s)	1.6	(63.9)
Position Detection				
Repeatability	mm	(in)	±0.05	(±0.002)
Linearity	%		± 0.15	
Electrical Data				
Max. Current @ 48VDC	A_{pk}		3.3	
Max. Current @ 72VDC	A_{pk}		4.9	
Max. Cont. Current [Passive cooling /Fan / Fluid]	A_{pk}		1.3 / 2.3 / -	
Thermal Data				
Max. Winding Temperature (Sensor)	°C		90	
Thermal Resistance [Passive cooling / Fan / Fluid]	°K/W		2.1 / 0.61 / -	
Thermal Time Constant [Passive cooling / Fan / Fluid]	s		1400 / 410 / -	
Mechanical Data				
Slider Length	mm	(in)	1600	(63)
Slider Mass	g	(lb)	3620	(7.9)

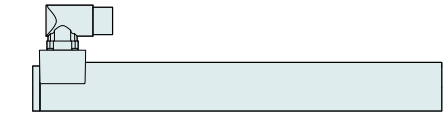





Item	Description	Item-No.
PS01-37x240-C	Stator with IP67 Connector M23/9(m)	0150-1224
PS01-37x240	Stator, 1.5m Cable, Connector P/10(m)	0150-1203
PS01-37x240-C20	Stator, 0.2m Cable, IP67 St. M23/9(m)	0150-1238
PL01-20x1600/1540-LC	Slider 'standard LC'	0150-2571

Linear Guides H01



HM01-37x240/60	Linear Module 37x240 with 60 mm Stroke		
H-Guide	H01-37x286/60	H-Guide for P01-37x240, Stroke max 60mm	0150-5023
	H01-37x286/60-GF	H-Guide for P01-37x240, Stroke max 60mm	0150-5083
Stator	PS01-37x240-C	Stator with IP67 Connector M23/9(m)	0150-1224
	PS01-37x240	Stator, 1.5m Cable, Connector P/10(m)	0150-1203
	PS01-37x240-C20	Stator, 0.2m Cable, IP67 St. M23/9(m)	0150-1238
Slider	PL01-20x400/340-LC	Slider 'standard LC'	0150-2562

HM01-37x240/160	Linear Module 37x240 with 160 mm Stroke		
H-Guide	H01-37x286/160	H-Guide for P01-37x240, Stroke max 160mm	0150-5024
	H01-37x286/160-GF	H-Guide for P01-37x240, Stroke max 160mm	0150-5084
Stator	PS01-37x240-C	Stator with IP67 Connector M23/9(m)	0150-1224
	PS01-37x240	Stator, 1.5m Cable, Connector P/10(m)	0150-1203
	PS01-37x240-C20	Stator, 0.2m Cable, IP67 St. M23/9(m)	0150-1238
Slider	PL01-20x500/440-LC	Slider 'standard LC'	0150-2563

HM01-37x240/260	Linear Module 37x240 with 260 mm Stroke		
H-Guide	H01-37x286/260	H-Guide for P01-37x240, Stroke max 260mm	0150-5025
	H01-37x286/260-GF	H-Guide for P01-37x240, Stroke max 260mm	0150-5085
Stator	PS01-37x240-C	Stator with IP67 Connector M23/9(m)	0150-1224
	PS01-37x240	Stator, 1.5m Cable, Connector P/10(m)	0150-1203
	PS01-37x240-C20	Stator, 0.2m Cable, IP67 St. M23/9(m)	0150-1238
Slider	PL01-20x600/540-LC	Slider 'standard LC'	0150-2564

Accessories			
Brake	HB01-37	Pneumatic brake for H01-37 guides	0150-5052
Fan	HV01-37/48	Fan cooling for H01-37/48 &PF02-37/48	0150-5051
MagSpring	MF01-37/H37	Flange MagSpring 37 / H-Guide 23/37/48	0250-2307
	MA01-37/H37	Adapter MagSpring 37&20 / H-Guide 37	0250-0117
Centering sleeve	HC01-09/04	Centering sleeve D9x4 mm	0150-3251
Wipers	HA01-27/20-F	Wiper for H01-37 guides, front side	0150-5108

FIND MORE PRODUCT DETAILS IN THE CHAPTER "LINEAR GUIDES".

Bridge Guide B01



BM01-37x240/140	**Bridge Module 37x240 with 140 mm Stroke [1)]**			
	B-Guide	B01-37x286/140	B-Guide for P01-37x240, Stroke max 140mm	0150-5144
		B01-37x286/140-GF	B-Guide for P01-37x240, Stroke max 140mm	0150-5147
	Stator	PS01-37x240-C	Stator with IP67 Connector M23/9(m)	0150-1224
		PS01-37x240	Stator, 1.5m Cable, Connector P/10(m)	0150-1203
		PS01-37x240-C20	Stator, 0.2m Cable, IP67 St. M23/9(m)	0150-1238
	Slider	PL01-19x500/420	Slider 'high clearance' B01-37x286/140	0150-1455
BM01-37x240/240	**Bridge Module 37x240 with 240 mm Stroke [1)]**			
	B-Guide	B01-37x286/240	B-Guide for P01-37x240, Stroke max 240mm	0150-5145
		B01-37x286/240-GF	B-Guide for P01-37x240, Stroke max 240mm	0150-5148
	Stator	PS01-37x240-C	Stator with IP67 Connector M23/9(m)	0150-1224
		PS01-37x240	Stator, 1.5m Cable, Connector P/10(m)	0150-1203
		PS01-37x240-C20	Stator, 0.2m Cable, IP67 St. M23/9(m)	0150-1238
	Slider	PL01-19x600/520	Slider 'high clearance'	0150-1456
BM01-37x240/340	**Bridge Module 37x240 with 340 mm Stroke [1)]**			
	B-Guide	B01-37x286/340	B-Guide for P01-37x240, Stroke max 340mm	0150-5146
		B01-37x286/340-GF	B-Guide for P01-37x240, Stroke max 340mm	0150-5149
	Stator	PS01-37x240-C	Stator with IP67 Connector M23/9(m)	0150-1224
		PS01-37x240	Stator, 1.5m Cable, Connector P/10(m)	0150-1203
		PS01-37x240-C20	Stator, 0.2m Cable, IP67 St. M23/9(m)	0150-1238
	Slider	PL01-19x700/620	Slider 'high clearance'	0150-1457

Accessories				
	Brake	HB01-37	Pneumatic Brake for H01-37/600N (4-6Bar)	0150-5052
	Fan	HV01-37/48	Fan cooling for H01-37/48 &PF02-37/48	0150-5051
	MagSpring	MF01-37/H37	Flange MagSpring 37 / H-Guide 23/37/48	0250-2307
		MA01-37/H37	Adapter MagSpring 37&20 / H-Guide 37	0250-0117
	Centering sleeve	HC01-09/04	Centering sleeve D9x4 mm	0150-3251
	Wipers	HA01-27/20-F	Wiper for H01-37 guides, front side	0150-5108

[1)] The stroke is reduced by 18mm when using cable models.

FIND MORE PRODUCT DETAILS IN THE CHAPTER "LINEAR GUIDES".

Motor Cable

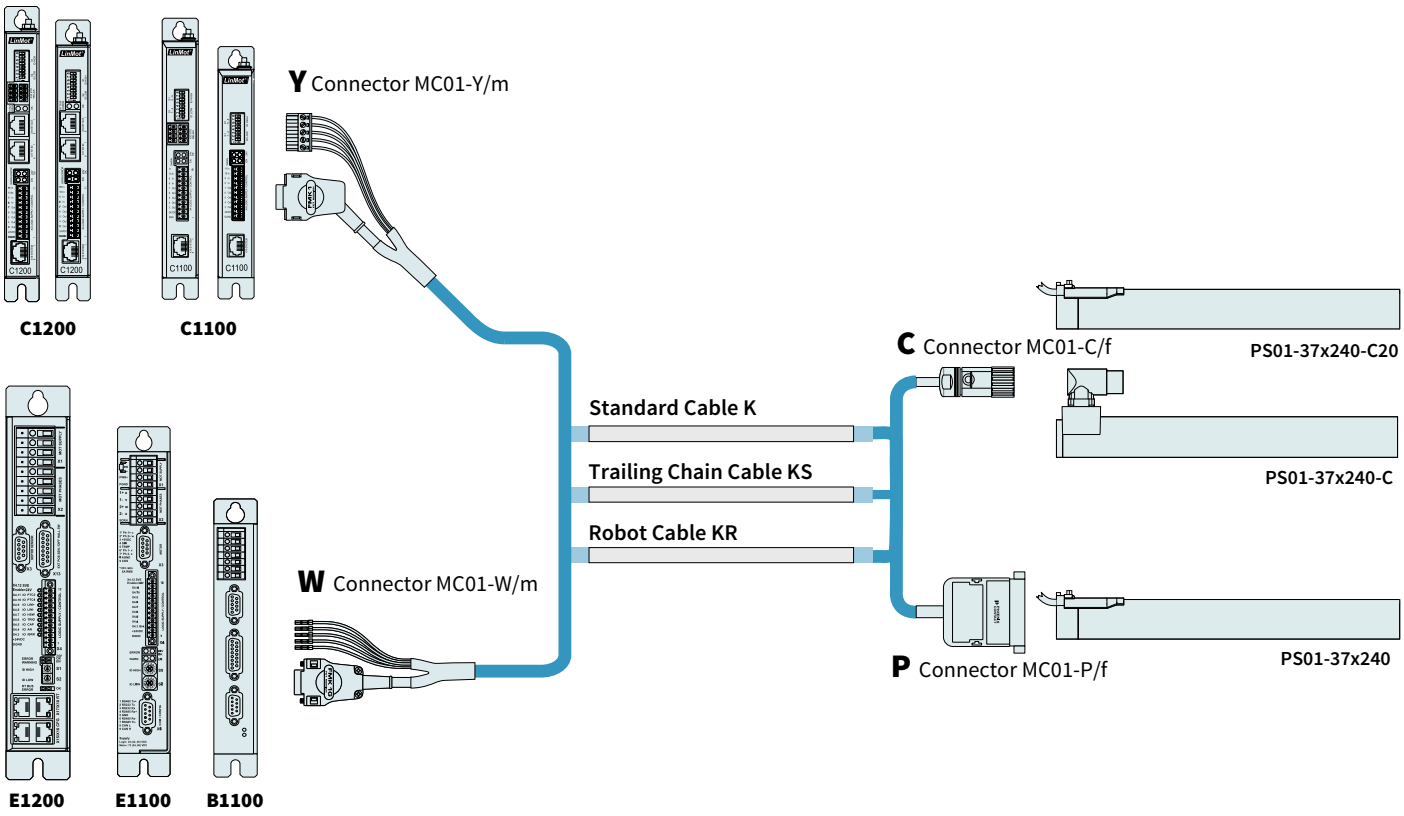

ORDERING INFORMATION

STANDARD CABLE		
Item	**Description**	**Item-No.**
K05-W/C-2	Motor Cable W/C, 2 m	0150-2123
K05-W/C-4	Motor Cable W/C, 4 m	0150-2124
K05-W/C-6	Motor Cable W/C, 6 m	0150-2125
K05-W/C-8	Motor Cable W/C, 8 m	0150-2126
K05-W/C-	Motor Cable W/C, Custom length	0150-3263
K05-W/P	Motor Cable W/P, Custom length	0150-3113
K05-Y/C-2	Motor Cable Y/R, 2 m	0150-2425
K05-Y/C-4	Motor Cable Y/R, 4 m	0150-2426
K05-Y/C-6	Motor Cable Y/R, 6 m	0150-2427
K05-Y/C-8	Motor Cable Y/R, 8 m	0150-2428
K05-Y-Fe/C-	Motor Cable Y-Fe/R, Custom length	0150-3502

TRAILING CHAIN CABLE		
Item	**Description**	**Item-No.**
KS05-W/C-4	Trailing Chain Cable W/C, 4 m	0150-2127
KS05-W/C-6	Trailing Chain Cable W/C, 6 m	0150-2128
KS05-W/C-8	Trailing Chain Cable W/C, 8 m	0150-2129
KS05-W/C-	Trailing Chain Cable W/C, Custom length	0150-3204
KS05-W/P-	Trailing Chain Cable W/P, Custom length	0150-3114
KS05-Y/C-4	Trailing Chain Cable Y/C, 4 m	0150-2436
KS05-Y/C-6	Trailing Chain Cable Y/C, 6 m	0150-2437
KS05-Y/C-8	Trailing Chain Cable Y/C, 8 m	0150-2438
KS05-Y-Fe/C-	Trailing Chain Cable Y-Fe/C, Custom length	0150-3508

ROBOT CABLE		
Item	**Description**	**Item-No.**
KR05-W/C-	Robot Cable KR05-W/C, Custom length	0150-3644
KR05-Y-Fe/C-	Robot Cable KR05-Y-Fe/C, Custom length	0150-3513

CONNECTOR & CABLE (INDIVIDUAL)		
Item	**Description**	**Item-No.**
MC01-W/m	Motor Connector W/m	0150-3140
MC01-Y-Fe/m	Motor Connector Y-Fe/m	0150-3289
MC01-C/f	Motor Connector C/f	0150-3080
MC01-P/f	Motor Connector P/f	0150-3021
K05-04/05	Motor Cable per m	0150-1920
KS05-04/05	Trailing Chain Cable per m	0150-1938
KR05-04/05	Robot Cable per m	0150-1846

MOTOR FLANGES



Item	Description	Item-No.
PF02-37x200	Flange 37x200 mm	0150-1999

FIND MORE PRODUCT DETAILS IN THE CHAPTER "ACCESSORIES".

FANS



Item	Description	Item-No.
HV01-37/48	Fan cooling for H01-37/48 &PF02-37/48	0150-5051

FIND MORE PRODUCT DETAILS IN THE CHAPTER "ACCESSORIES".

SLIDER MOUNTING





Item	Description	Item-No.
PLF01-20	Fixed Bearing Set for 19mm and 20mm Slider	0150-3083
PLF01-20-SS	Fixed Bearing Set for 19mm and 20mm Slider, Stainless steel	0150-3296
PLL01-19	Floating Bearing for PL01-19 Slider	0150-3335
PLL01-20	Floating Bearing for PL01-20 Slider	0150-3084
PLM01-20-MK	Mounting Kit for PL01-20 Slider	0150-3079

FIND MORE PRODUCT DETAILS IN THE CHAPTER "ACCESSORIES".

WIPERS



Item	Description	Item-No.
PA01-37/19-F	Wipers for PS01-37x...	0150-3225
PA01-37/19-R	Wipers for PS01-37x...-C	0150-3226
PA01-37/19-R cable	Wipers for PS01-37x... Cable Type	0150-3227
PA01-37/20-F	Wipers for PS01-37x...	0150-3126
PA01-37/20-R	Wipers for PS01-37x...-C Typ	0150-3201
PA01-37/20-R cable	Wipers for PS01-37x...-Cable Type	0150-3221

FIND MORE PRODUCT DETAILS IN THE CHAPTER "ACCESSORIES".

EXTERNAL POSITION SENSORS



Item	Description	Item-No.
MS01-1/D	Linear Encoder 1µm, A/B (for inc. strip)	0150-1840
MB01-1000	Magnetic incremental strip for MS01-1/D, per cm	0150-1963
KS025-D/D-Encoder	Encoder Cable (Length in m)	0150-3166
KS025-D/D15-Encoder	Encoder Cable (Length in m)	0150-3168

FIND MORE PRODUCT DETAILS IN THE CHAPTER "ACCESSORIES".



Item	Description	Item-No.
MS01-1/D-SSI	Linear Encoder 1µm, A/B (for absolute strip)	0150-2095
MB01-1000-ABS	Magnetic absolute strip for MS01-1/D-SSI (per cm)	0150-2096
EC01-ABS/ENC-12-S	MS01-1/D-SSI Encoder connector straight	0150-3616
KSS01-12-D15/ABS-ENC	Special cable for MS01-1/D-SSI on C1100/C1200/C1400/E1200/E1400 Drives	0150-3652

FIND MORE PRODUCT DETAILS IN THE CHAPTER "ACCESSORIES".

LINEAR MOTORS P01-37x240F



- Highly dynamic drives
- With a special F-winding for a higher maximum speed
- Wide stroke range
- Available with cable outlet or with rotatable connector
- Optional with air cooling
- Wide range of applications in handling modules as well as in plant and machine construction

3

LINEAR MOTORS P01-37x240F

Technical Data ____ **295**

Motor Specifications

P01-37x240F/80x120-LC ____ **298**

P01-37x240F/20x180-LC ____ **299**

P01-37x240F/80x280-LC ____ **300**

P01-37x240F/180x380-LC ____ **301**

P01-37x240F/280x480-LC ____ **302**

P01-37x240F/380x580-LC ____ **303**

P01-37x240F/480x680-LC ____ **304**

P01-37x240F/580x780-LC ____ **305**

P01-37x240F/680x880-LC ____ **306**

P01-37x240F/880x1080-LC ____ **307**

P01-37x240F/1080x1280-LC ____ **308**

P01-37x240F/1280x1480-LC ____ **309**

Linear Guides ____ **310**

Accessories ____ **312**



MOTOR FAMILY P01-37x240F

Technical Data				
Stroke				
Standard Stroke (SS)	mm	(in)	≤ 1280	(≤ 50.4)
Extended Stroke (ES)	mm	(in)	≤ 1480	(≤ 58.3)
Force				
Max. Force @ 48VDC	N	(lbf)	205	(46.2)
Max. Force @ 72VDC	N	(lbf)	308	(69.2)
Max. Cont. Force [Passive cooling/ Fan / Fluid]	N	(lbf)	52 / 96 / -	(12 / 22 / -)
Max. Border Force relative	%		≤ 88	
Force Constant	N/A_{pk}	(lbf/A_{pk})	25.8	(5.8)
Velocity				
Max. Velocity @ 48VDC	m/s	(in/s)	2.5	(99.9)
Max. Velocity @ 72VDC	m/s	(in/s)	3.8	(149.9)
Position Detection				
Position Resolution	mm	(in)	0.005	(0.0002)
Repeatability	mm	(in)	±0.05	(±0.002)
Position Resolution with ES	mm	(in)	0.001	(0.00004)
Repeatability with ES	mm	(in)	±0.01	(±0.0004)
Linearity with ES	mm	(in)	±0.01	(±0.0004)
Electrical Data				
Max. Current @ 48VDC	A_{pk}		7.9	
Max. Current @ 72VDC	A_{pk}		11.8	
Max. Cont. Current [Passive cooling /Fan / Fluid]	A_{pk}		2 / 3.7 / -	
Terminal Resistance 25 °C / 120 °C	Ohm		4.9 / 6.7	
Terminal Inductivity	mH		2.4	
Magnetic Period	mm	(in)	40	(1.57)
Thermal Data				
Max. Winding Temperature (Sensor)	°C		90	
Thermal Resistance [Passive cooling / Fan / Fluid]	°K/W		2 / 0.58 / -	
Thermal Time Constant [Passive cooling / Fan / Fluid]	s		1300 / 390 / -	
Mechanical Data				
Stator Diameter	mm	(in)	37	(1.5)
Stator Length [Connector type / Cable type]	mm	(in)	336 / 347	(13 / 14)
Stator Mass	g	(lb)	1385	(3.05)
Slider Diameter	mm	(in)	20	(0.79)
Slider Length	mm	(in)	240 - 1600	(9.4 - 63)
Slider Mass	g	(lb)	490 - 3620	(1.08 - 7.96)
IP Code			IP 65	

STATOR CONNECTOR TYPE

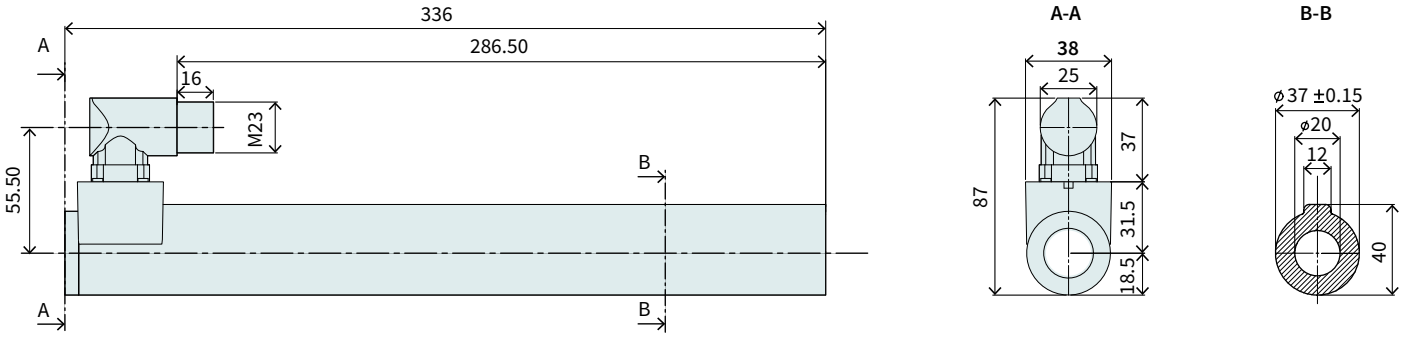

Item	Description	Item-No.
PS01-37x240F-C	Stator with IP67 Connector M23/9(m)	0150-1225

STATOR CABLE TYPE

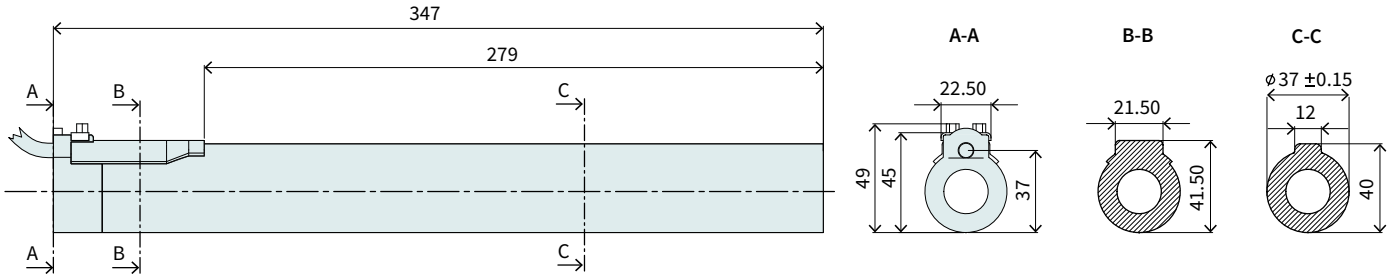

Item	Description	Item-No.
PS01-37x240F	Stator, 1.5m Cable, Connector P/10(m)	0150-1256
PS01-37x240F-C20	Stator, 0.2m Cable, IP67 St. M23/9(m)	0150-1239

CONNECTOR

Motor Connector Wiring	PS01-37x240F-C PS01-37x240F-C20	PS01-37x240F	Wire color motor cable
	C-Connector	P-Connector	
Ph 1+	A	1	red
Ph 1-	B	2	pink
Ph 2+	C	3	blue
Ph 2-	D	4	grey
+5VDC	E	5	white
GND	F	6	inner shield
Sin	G	7	yellow
Cos	H	8	green
Temp.	L	9	black
Shield	Housing	10	outer Shield

C-Connector

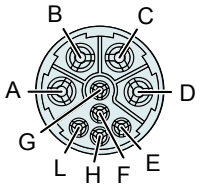

View: Motor Connector, plug side

P-Connector

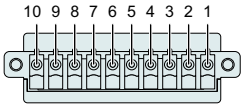

SLIDER

Slider Standard / Heavy Duty

Number of grooves determines the slider type (see chapter 2 / slider) and marks the front end.

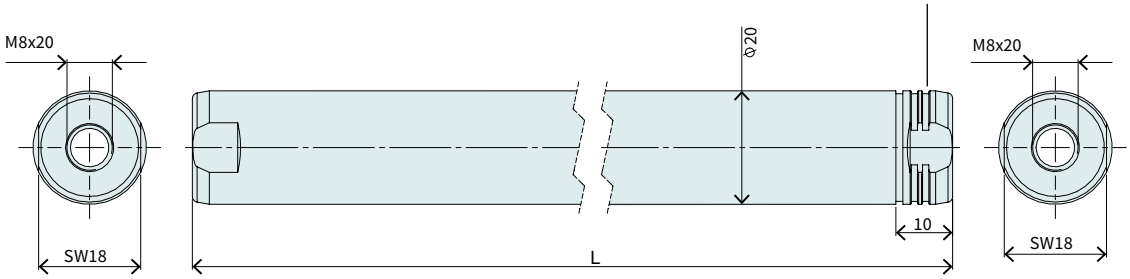

High-Clearance Slider

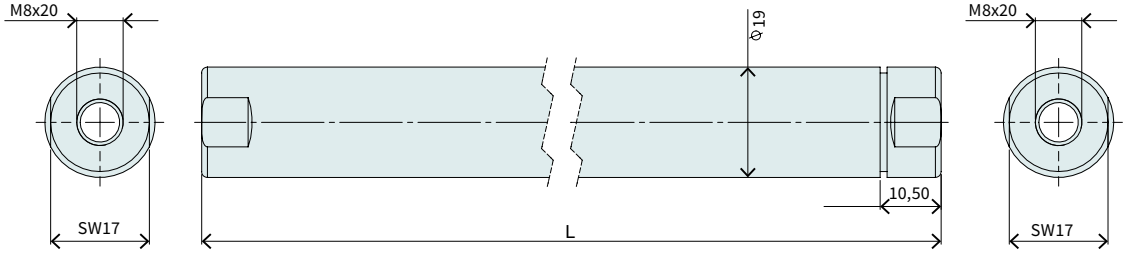

Slider Standard				
Item	Description	Max. Stroke [mm]	Standard Stroke [mm]	Item-No.
PL01-20x240/180-LC	Slider 'standard LC'	120	40	0150-2560
PL01-20x300/240-LC	Slider 'standard LC'	180	100	0150-2561
PL01-20x400/340-LC	Slider 'standard LC'	280	200	0150-2562
PL01-20x500/440-LC	Slider 'standard LC'	380	300	0150-2563
PL01-20x600/540-LC	Slider 'standard LC'	480	400	0150-2564
PL01-20x700/640-LC	Slider 'standard LC'	580	500	0150-2565
PL01-20x800/740-LC	Slider 'standard LC'	680	600	0150-2566
PL01-20x900/840-LC	Slider 'standard LC'	780	700	0150-2567
PL01-20x1000/940-LC	Slider 'standard LC'	880	800	0150-2568
PL01-20x1200/1140-LC	Slider 'standard LC'	1080	1000	0150-2569
PL01-20x1400/1340-LC	Slider 'standard LC'	1280	1200	0150-2570
PL01-20x1600/1540-LC	Slider 'standard LC'	1480	1400	0150-2571

Slider Heavy Duty				
Item	Description	Max. Stroke [mm]	Standard Stroke [mm]	Item-No.
PL02-20x240/180-LC	Slider 'heavy duty LC'	120	40	0150-2572
PL02-20x300/240-LC	Slider 'heavy duty LC'	180	100	0150-2573
PL02-20x400/340-LC	Slider 'heavy duty LC'	280	200	0150-2574
PL02-20x500/440-LC	Slider 'heavy duty LC'	380	300	0150-2575
PL02-20x600/540-LC	Slider 'heavy duty LC'	480	400	0150-2576
PL02-20x700/640-LC	Slider 'heavy duty LC'	580	500	0150-2577
PL02-20x800/740-LC	Slider 'heavy duty LC'	680	600	0150-2578
PL02-20x900/840-LC	Slider 'heavy duty LC'	780	700	0150-2579

High-Clearance Slider				
Item	Description	Max. Stroke [mm]	Standard Stroke [mm]	Item-No.
PL01-19x240/160	Slider 'high clearance'	100	80	0150-1448
PL01-19x300/220	Slider 'high clearance'	160	140	0150-1449
PL01-19x395/320	Slider 'high clearance'	260	240	0150-1452
PL01-19x500/420	Slider 'high clearance'	360	340	0150-1455
PL01-19x600/520	Slider 'high clearance'	460	440	0150-1456
PL01-19x700/620	Slider 'high clearance'	560	540	0150-1457

P01-37x240F/80x120-LC

Max. Stroke: 120 mm
Peak Force: 205 N

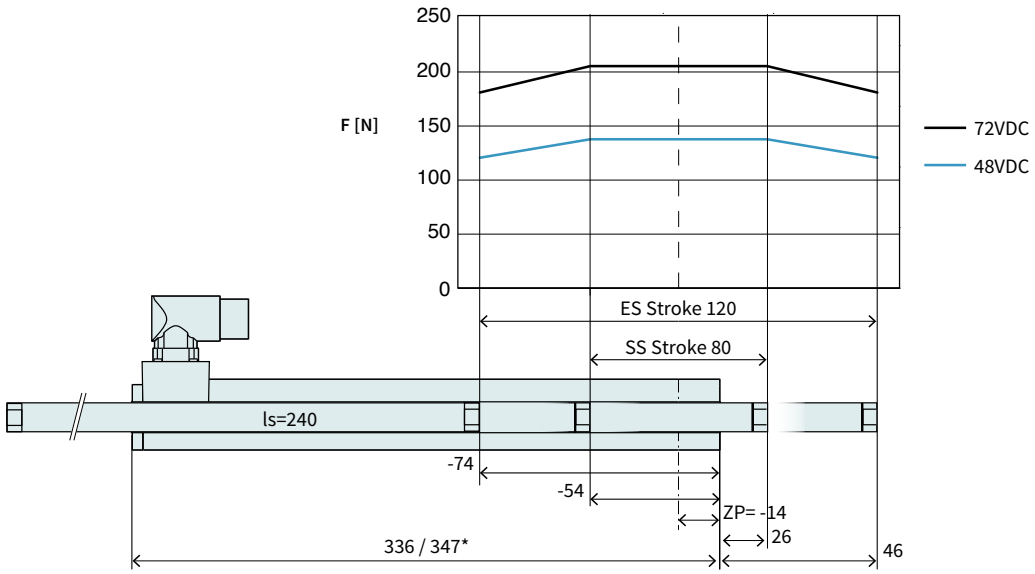

Dimensions in mm
*Cable Type

Technical Data P01-37x240F/80x120-LC				
Stroke				
Standard Stroke (SS)	mm	(in)	80	(3.14)
Extended Stroke (ES)	mm	(in)	120	(4.71)
Force				
Max. Force @ 48VDC	N	(lbf)	137	(30.8)
Max. Force @ 72VDC	N	(lbf)	205	(46.2)
Max. Cont. Force [Passive cooling/ Fan / Fluid]	N	(lbf)	35 / 64 / -	(7.8 / 14 / -)
Max. Border Force relative	%		88	
Force Constant	N/A_{pk}	(lbf/A_{pk})	17.2	(3.87)
Velocity				
Max. Velocity @ 48VDC	m/s	(in/s)	2.5	(99.9)
Max. Velocity @ 72VDC	m/s	(in/s)	3.8	(149.9)
Position Detection				
Repeatability	mm	(in)	±0.05	(±0.002)
Linearity	%		± 0.5	
Electrical Data				
Max. Current @ 48VDC	A_{pk}		7.9	
Max. Current @ 72VDC	A_{pk}		11.8	
Max. Cont. Current [Passive cooling /Fan / Fluid]	A_{pk}		2 / 3.7 / -	
Thermal Data				
Max. Winding Temperature (Sensor)	°C		90	
Thermal Resistance [Passive cooling / Fan / Fluid]	°K/W		2 / 0.58 / -	
Thermal Time Constant [Passive cooling / Fan / Fluid]	s		1300 / 390 / -	
Mechanical Data				
Slider Length	mm	(in)	240	(9.4)
Slider Mass	g	(lb)	490	(1.08)

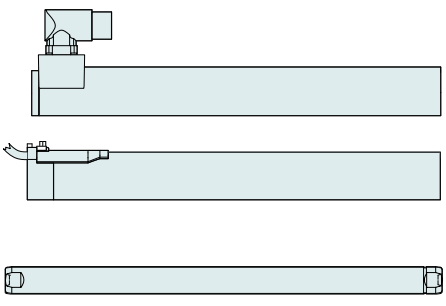

Item	Description	Item-No.
PS01-37x240F-C	Stator with IP67 Connector M23/9(m)	0150-1225
PS01-37x240F-C20	Stator, 0.2m Cable, IP67 St. M23/9(m)	0150-1239
PL01-20x240/180-LC	Slider 'standard LC'	0150-2560
PL02-20x240/180-LC	Slider 'heavy duty LC'	0150-2572
PL01-19x240/160*	Slider 'high clearance'	0150-1448

* With this slider, the motor specifications above change.

P01-37x240F/20x180-LC

Max. Stroke: 180 mm
Peak Force: 282 N

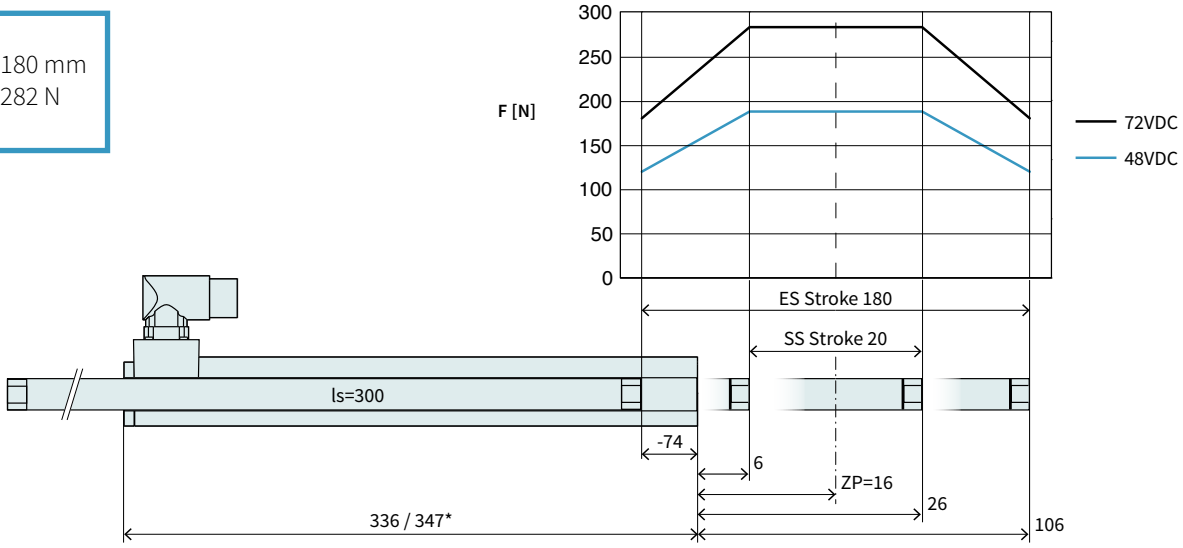

Dimensions in mm
*Cable Type

Technical Data P01-37x240F/20x180-LC				
Stroke				
Standard Stroke (SS)	mm	(in)	20	(0.78)
Extended Stroke (ES)	mm	(in)	180	(7.08)
Force				
Max. Force @ 48VDC	N	(lbf)	188	(42.3)
Max. Force @ 72VDC	N	(lbf)	282	(63.5)
Max. Cont. Force [Passive cooling/ Fan / Fluid]	N	(lbf)	48 / 88 / -	(11 / 20 / -)
Max. Border Force relative	%		64	
Force Constant	N/A_{pk}	(lbf/A_{pk})	23.6	(5.32)
Velocity				
Max. Velocity @ 48VDC	m/s	(in/s)	1.8	(73.9)
Max. Velocity @ 72VDC	m/s	(in/s)	2.7	(109.9)
Position Detection				
Repeatability	mm	(in)	±0.05	(±0.002)
Linearity	%		± 0.4	
Electrical Data				
Max. Current @ 48VDC	A_{pk}		7.9	
Max. Current @ 72VDC	A_{pk}		11.8	
Max. Cont. Current [Passive cooling /Fan / Fluid]	A_{pk}		2 / 3.7 / -	
Thermal Data				
Max. Winding Temperature (Sensor)	°C		90	
Thermal Resistance [Passive cooling / Fan / Fluid]	°K/W		2 / 0.58 / -	
Thermal Time Constant [Passive cooling / Fan / Fluid]	s		1300 / 390 / -	
Mechanical Data				
Slider Length	mm	(in)	300	(12)
Slider Mass	g	(lb)	630	(1.39)

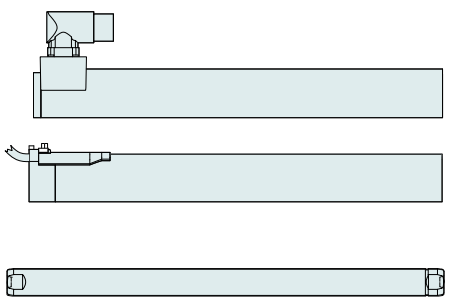

Item	Description	Item-No.
PS01-37x240F-C	Stator with IP67 Connector M23/9(m)	0150-1225
PS01-37x240F-C20	Stator, 0.2m Cable, IP67 St. M23/9(m)	0150-1239
PL01-20x300/240-LC	Slider 'standard LC'	0150-2561
PL02-20x300/240-LC	Slider 'heavy duty LC'	0150-2573
PL01-19x300/220*	Slider 'high clearance'	0150-1449

* With this slider, the motor specifications above change.

P01-37x240F/80x280-LC

Max. Stroke: 280 mm
Peak Force: 308 N

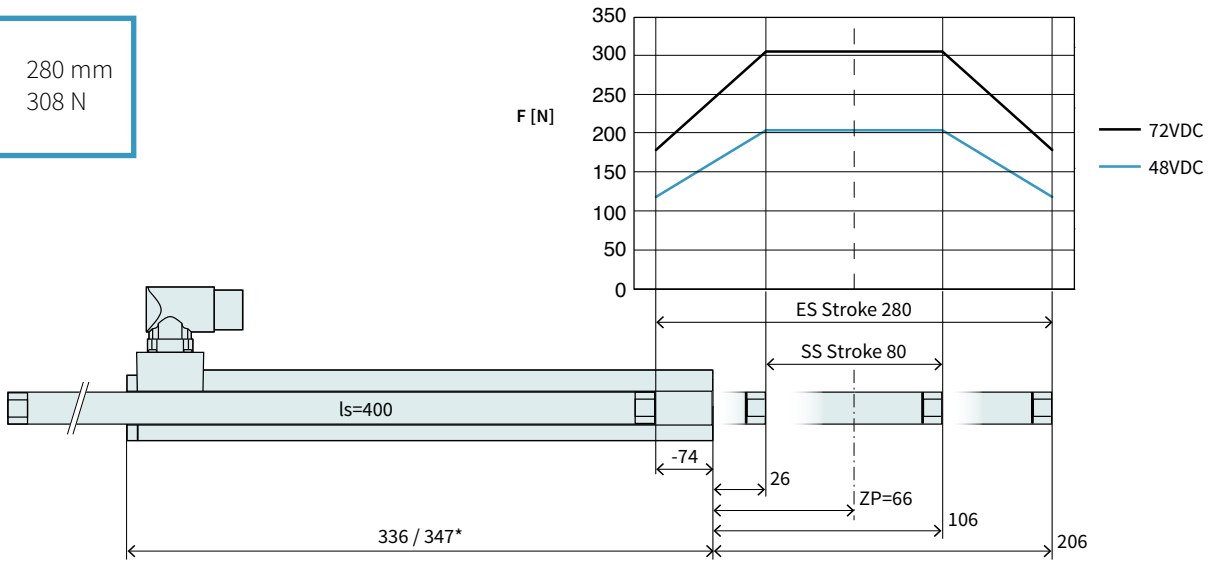

Dimensions in mm
*Cable Type

Technical Data P01-37x240F/80x280-LC				
Stroke				
Standard Stroke (SS)	mm	(in)	80	(3.14)
Extended Stroke (ES)	mm	(in)	280	(10.99)
Force				
Max. Force @ 48VDC	N	(lbf)	205	(46.2)
Max. Force @ 72VDC	N	(lbf)	308	(69.2)
Max. Cont. Force [Passive cooling/ Fan / Fluid]	N	(lbf)	52 / 96 / -	(12 / 22 / -)
Max. Border Force relative	%		58	
Force Constant	N/A_{pk}	(lbf/A_{pk})	25.8	(5.8)
Velocity				
Max. Velocity @ 48VDC	m/s	(in/s)	1.6	(66.9)
Max. Velocity @ 72VDC	m/s	(in/s)	2.5	(99.9)
Position Detection				
Repeatability	mm	(in)	±0.05	(±0.002)
Linearity	%		± 0.3	
Electrical Data				
Max. Current @ 48VDC	A_{pk}		7.9	
Max. Current @ 72VDC	A_{pk}		11.8	
Max. Cont. Current [Passive cooling /Fan / Fluid]	A_{pk}		2 / 3.7 / -	
Thermal Data				
Max. Winding Temperature (Sensor)	°C		90	
Thermal Resistance [Passive cooling / Fan / Fluid]	°K/W		2 / 0.58 / -	
Thermal Time Constant [Passive cooling / Fan / Fluid]	s		1300 / 390 / -	
Mechanical Data				
Slider Length	mm	(in)	400	(16)
Slider Mass	g	(lb)	860	(1.9)

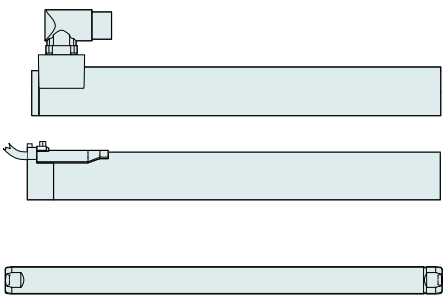

Item	Description	Item-No.
PS01-37x240F-C	Stator with IP67 Connector M23/9(m)	0150-1225
PS01-37x240F-C20	Stator, 0.2m Cable, IP67 St. M23/9(m)	0150-1239
PL01-20x400/340-LC	Slider 'standard LC'	0150-2562
PL02-20x400/340-LC	Slider 'heavy duty LC'	0150-2574
PL01-19x395/320*	Slider 'high clearance'	0150-1452

* With this slider, the motor specifications above change.

P01-37x240F/180x380-LC

Max. Stroke: 380 mm
Peak Force: 308 N

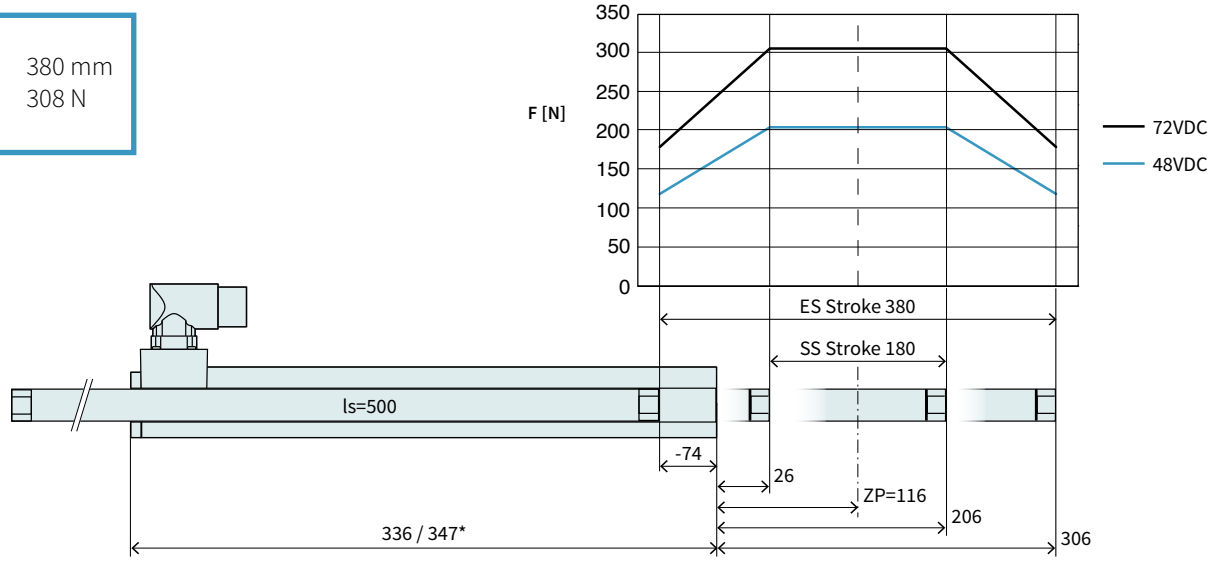

Dimensions in mm
*Cable Type

Technical Data P01-37x240F/180x380-LC				
Stroke				
Standard Stroke (SS)	mm	(in)	180	(7.08)
Extended Stroke (ES)	mm	(in)	380	(14.99)
Force				
Max. Force @ 48VDC	N	(lbf)	205	(46.2)
Max. Force @ 72VDC	N	(lbf)	308	(69.2)
Max. Cont. Force [Passive cooling/ Fan / Fluid]	N	(lbf)	52 / 96 / -	(12 / 22 / -)
Max. Border Force relative	%		58	
Force Constant	N/A_{pk}	(lbf/A_{pk})	25.8	(5.8)
Velocity				
Max. Velocity @ 48VDC	m/s	(in/s)	1.6	(66.9)
Max. Velocity @ 72VDC	m/s	(in/s)	2.5	(99.9)
Position Detection				
Repeatability	mm	(in)	±0.05	(±0.002)
Linearity	%		± 0.25	
Electrical Data				
Max. Current @ 48VDC	A_{pk}		7.9	
Max. Current @ 72VDC	A_{pk}		11.8	
Max. Cont. Current [Passive cooling /Fan / Fluid]	A_{pk}		2 / 3.7 / -	
Thermal Data				
Max. Winding Temperature (Sensor)	°C		90	
Thermal Resistance [Passive cooling / Fan / Fluid]	°K/W		2 / 0.58 / -	
Thermal Time Constant [Passive cooling / Fan / Fluid]	s		1300 / 390 / -	
Mechanical Data				
Slider Length	mm	(in)	500	(20)
Slider Mass	g	(lb)	1090	(2.4)

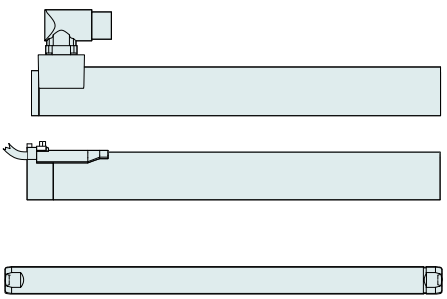

Item	Description	Item-No.
PS01-37x240F-C	Stator with IP67 Connector M23/9(m)	0150-1225
PS01-37x240F-C20	Stator, 0.2m Cable, IP67 St. M23/9(m)	0150-1239
PL01-20x500/440-LC	Slider 'standard LC'	0150-2563
PL02-20x500/440-LC	Slider 'heavy duty LC'	0150-2575
PL01-19x500/420*	Slider 'high clearance'	0150-1455

* With this slider, the motor specifications above change.

P01-37x240F/280x480-LC

Max. Stroke: 480 mm
Peak Force: 308 N

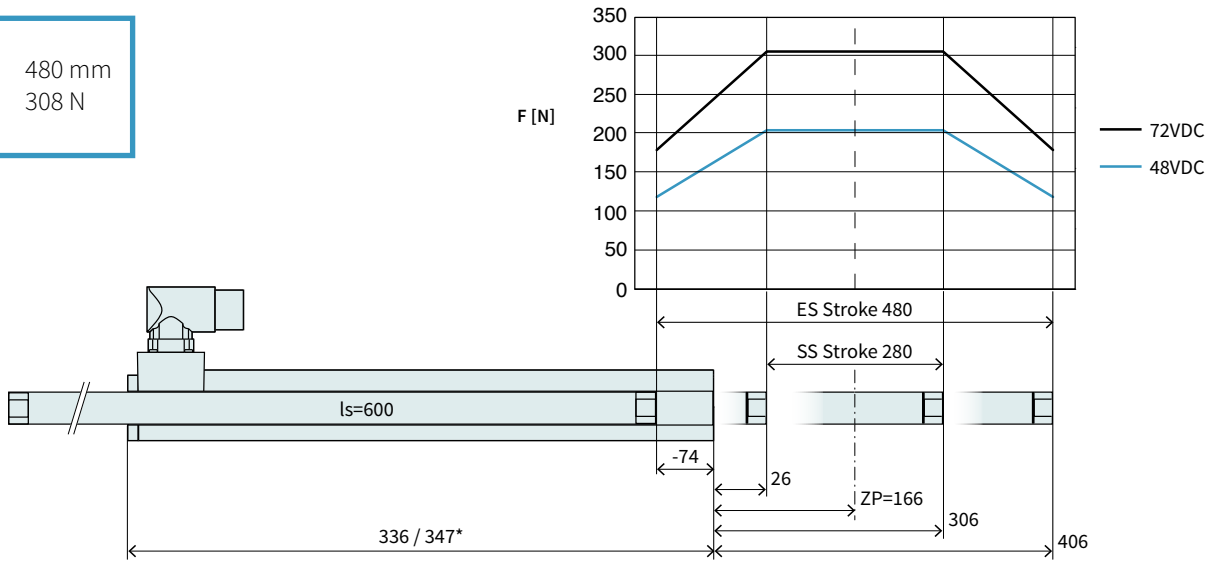

Dimensions in mm
*Cable Type

Technical Data P01-37x240F/280x480-LC				
Stroke				
Standard Stroke (SS)	mm	(in)	280	(10.99)
Extended Stroke (ES)	mm	(in)	480	(18.89)
Force				
Max. Force @ 48VDC	N	(lbf)	205	(46.2)
Max. Force @ 72VDC	N	(lbf)	308	(69.2)
Max. Cont. Force [Passive cooling/ Fan / Fluid]	N	(lbf)	52 / 96 / -	(12 / 22 / -)
Max. Border Force relative	%		58	
Force Constant	N/A_{pk}	(lbf/A_{pk})	25.8	(5.8)
Velocity				
Max. Velocity @ 48VDC	m/s	(in/s)	1.6	(66.9)
Max. Velocity @ 72VDC	m/s	(in/s)	2.5	(99.9)
Position Detection				
Repeatability	mm	(in)	±0.05	(±0.002)
Linearity	%		± 0.2	
Electrical Data				
Max. Current @ 48VDC	A_{pk}		7.9	
Max. Current @ 72VDC	A_{pk}		11.8	
Max. Cont. Current [Passive cooling /Fan / Fluid]	A_{pk}		2 / 3.7 / -	
Thermal Data				
Max. Winding Temperature (Sensor)	°C		90	
Thermal Resistance [Passive cooling / Fan / Fluid]	°K/W		2 / 0.58 / -	
Thermal Time Constant [Passive cooling / Fan / Fluid]	s		1300 / 390 / -	
Mechanical Data				
Slider Length	mm	(in)	600	(24)
Slider Mass	g	(lb)	1330	(2.93)

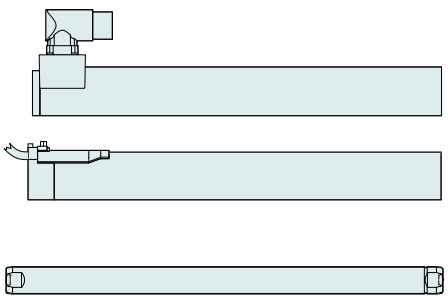

Item	Description	Item-No.
PS01-37x240F-C	Stator with IP67 Connector M23/9(m)	0150-1225
PS01-37x240F-C20	Stator, 0.2m Cable, IP67 St. M23/9(m)	0150-1239
PL01-20x600/540-LC	Slider 'standard LC'	0150-2564
PL02-20x600/540-LC	Slider 'heavy duty LC'	0150-2576
PL01-19x600/520*	Slider 'high clearance'	0150-1456

* With this slider, the motor specifications above change.

P01-37x240F/380x580-LC

Max. Stroke: 580 mm
Peak Force: 308 N

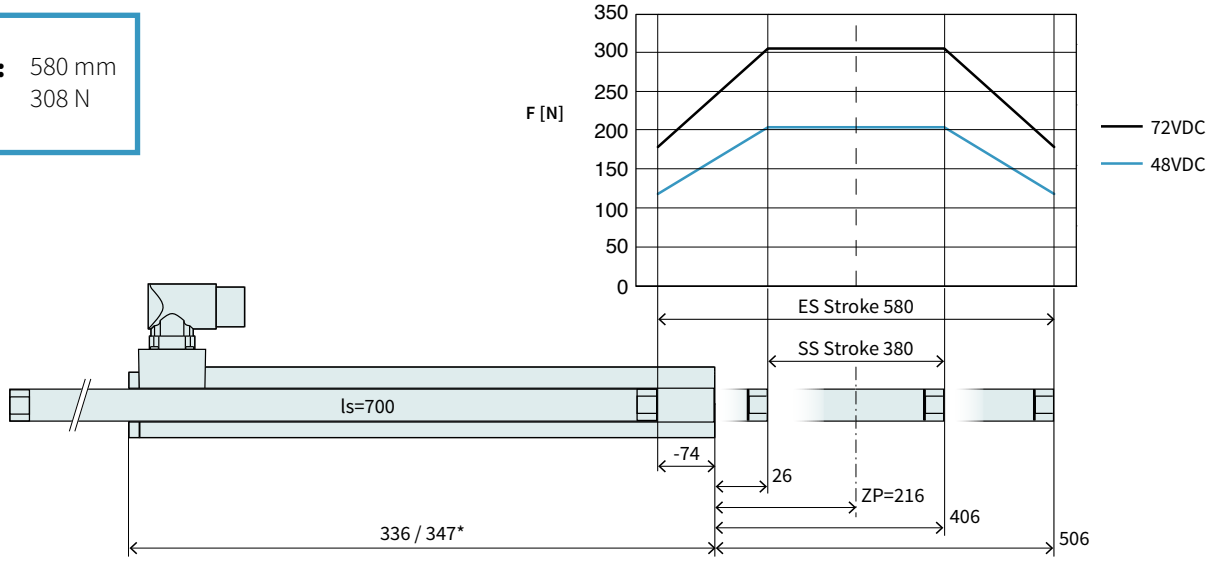

Dimensions in mm
*Cable Type

Technical Data P01-37x240F/380x580-LC				
Stroke				
Standard Stroke (SS)	mm	(in)	380	(14.99)
Extended Stroke (ES)	mm	(in)	580	(22.8)
Force				
Max. Force @ 48VDC	N	(lbf)	205	(46.2)
Max. Force @ 72VDC	N	(lbf)	308	(69.2)
Max. Cont. Force [Passive cooling/ Fan / Fluid]	N	(lbf)	52 / 96 / -	(12 / 22 / -)
Max. Border Force relative	%		58	
Force Constant	N/A_{pk}	(lbf/A_{pk})	25.8	(5.8)
Velocity				
Max. Velocity @ 48VDC	m/s	(in/s)	1.6	(66.9)
Max. Velocity @ 72VDC	m/s	(in/s)	2.5	(99.9)
Position Detection				
Repeatability	mm	(in)	±0.05	(±0.002)
Linearity	%		± 0.2	
Electrical Data				
Max. Current @ 48VDC	A_{pk}		7.9	
Max. Current @ 72VDC	A_{pk}		11.8	
Max. Cont. Current [Passive cooling /Fan / Fluid]	A_{pk}		2 / 3.7 / -	
Thermal Data				
Max. Winding Temperature (Sensor)	°C		90	
Thermal Resistance [Passive cooling / Fan / Fluid]	°K/W		2 / 0.58 / -	
Thermal Time Constant [Passive cooling / Fan / Fluid]	s		1300 / 390 / -	
Mechanical Data				
Slider Length	mm	(in)	700	(28)
Slider Mass	g	(lb)	1560	(3.43)

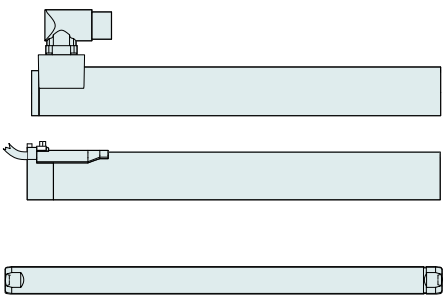

Item	Description	Item-No.
PS01-37x240F-C	Stator with IP67 Connector M23/9(m)	0150-1225
PS01-37x240F-C20	Stator, 0.2m Cable, IP67 St. M23/9(m)	0150-1239
PL01-20x700/640-LC	Slider 'standard LC'	0150-2565
PL02-20x700/640-LC	Slider 'heavy duty LC'	0150-2577
PL01-19x700/620*	Slider 'high clearance'	0150-1457

* With this slider, the motor specifications above change.

P01-37x240F/480x680-LC

Max. Stroke: 680 mm
Peak Force: 308 N

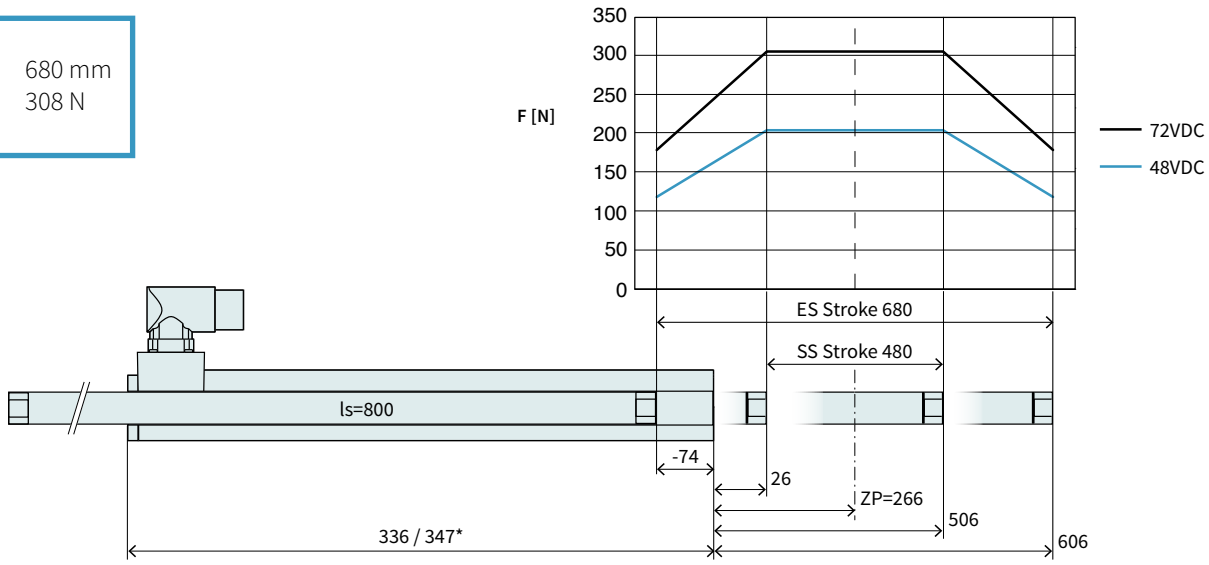

Dimensions in mm
*Cable Type

Technical Data P01-37x240F/480x680-LC				
Stroke				
Standard Stroke (SS)	mm	(in)	480	(18.89)
Extended Stroke (ES)	mm	(in)	680	(26.8)
Force				
Max. Force @ 48VDC	N	(lbf)	205	(46.2)
Max. Force @ 72VDC	N	(lbf)	308	(69.2)
Max. Cont. Force [Passive cooling/ Fan / Fluid]	N	(lbf)	52 / 96 / -	(12 / 22 / -)
Max. Border Force relative	%		58	
Force Constant	N/A_{pk}	(lbf/A_{pk})	25.8	(5.8)
Velocity				
Max. Velocity @ 48VDC	m/s	(in/s)	1.6	(66.9)
Max. Velocity @ 72VDC	m/s	(in/s)	2.5	(99.9)
Position Detection				
Repeatability	mm	(in)	±0.05	(±0.002)
Linearity	%		± 0.15	
Electrical Data				
Max. Current @ 48VDC	A_{pk}		7.9	
Max. Current @ 72VDC	A_{pk}		11.8	
Max. Cont. Current [Passive cooling /Fan / Fluid]	A_{pk}		2 / 3.7 / -	
Thermal Data				
Max. Winding Temperature (Sensor)	°C		90	
Thermal Resistance [Passive cooling / Fan / Fluid]	°K/W		2 / 0.58 / -	
Thermal Time Constant [Passive cooling / Fan / Fluid]	s		1300 / 390 / -	
Mechanical Data				
Slider Length	mm	(in)	800	(31)
Slider Mass	g	(lb)	1790	(3.94)

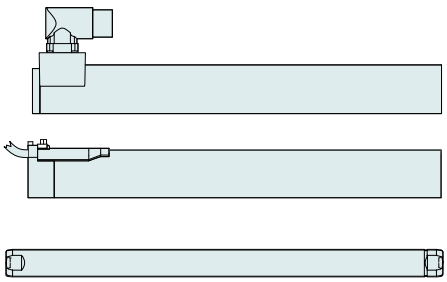

Item	Description	Item-No.
PS01-37x240F-C	Stator with IP67 Connector M23/9(m)	0150-1225
PS01-37x240F-C20	Stator, 0.2m Cable, IP67 St. M23/9(m)	0150-1239
PL01-20x800/740-LC	Slider 'standard LC'	0150-2566
PL02-20x800/740-LC	Slider 'heavy duty LC'	0150-2578

P01-37x240F/580x780-LC

Max. Stroke: 780 mm
Peak Force: 308 N

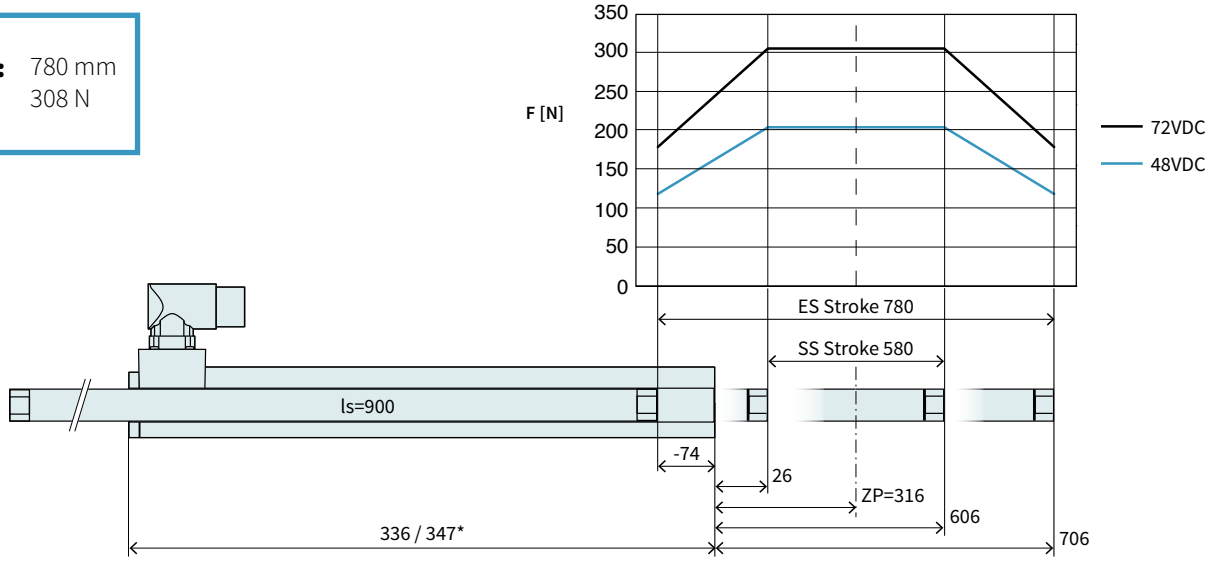

Dimensions in mm
*Cable Type

Technical Data P01-37x240F/580x780-LC				
Stroke				
Standard Stroke (SS)	mm	(in)	580	(22.8)
Extended Stroke (ES)	mm	(in)	780	(30.69)
Force				
Max. Force @ 48VDC	N	(lbf)	205	(46.2)
Max. Force @ 72VDC	N	(lbf)	308	(69.2)
Max. Cont. Force [Passive cooling/ Fan / Fluid]	N	(lbf)	52 / 96 / -	(12 / 22 / -)
Max. Border Force relative	%		58	
Force Constant	N/A_{pk}	(lbf/A_{pk})	25.8	(5.8)
Velocity				
Max. Velocity @ 48VDC	m/s	(in/s)	1.6	(66.9)
Max. Velocity @ 72VDC	m/s	(in/s)	2.5	(99.9)
Position Detection				
Repeatability	mm	(in)	±0.05	(±0.002)
Linearity	%		± 0.15	
Electrical Data				
Max. Current @ 48VDC	A_{pk}		7.9	
Max. Current @ 72VDC	A_{pk}		11.8	
Max. Cont. Current [Passive cooling /Fan / Fluid]	A_{pk}		2 / 3.7 / -	
Thermal Data				
Max. Winding Temperature (Sensor)	°C		90	
Thermal Resistance [Passive cooling / Fan / Fluid]	°K/W		2 / 0.58 / -	
Thermal Time Constant [Passive cooling / Fan / Fluid]	s		1300 / 390 / -	
Mechanical Data				
Slider Length	mm	(in)	900	(35)
Slider Mass	g	(lb)	2020	(4.44)

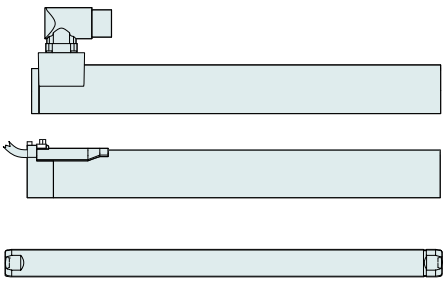

Item	Description	Item-No.
PS01-37x240F-C	Stator with IP67 Connector M23/9(m)	0150-1225
PS01-37x240F-C20	Stator, 0.2m Cable, IP67 St. M23/9(m)	0150-1239
PL01-20x900/840-LC	Slider 'standard LC'	0150-2567
PL02-20x900/840-LC	Slider 'heavy duty LC'	0150-2579

P01-37x240F/680x880-LC

Max. Stroke: 880 mm
Peak Force: 308 N

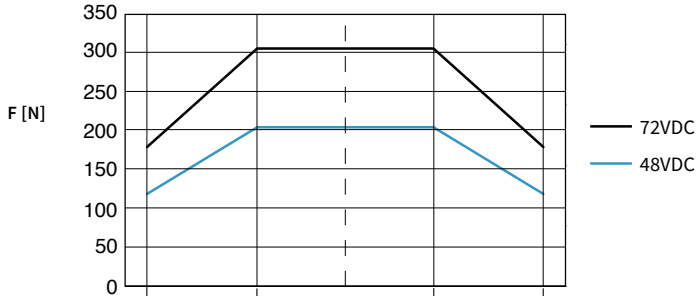

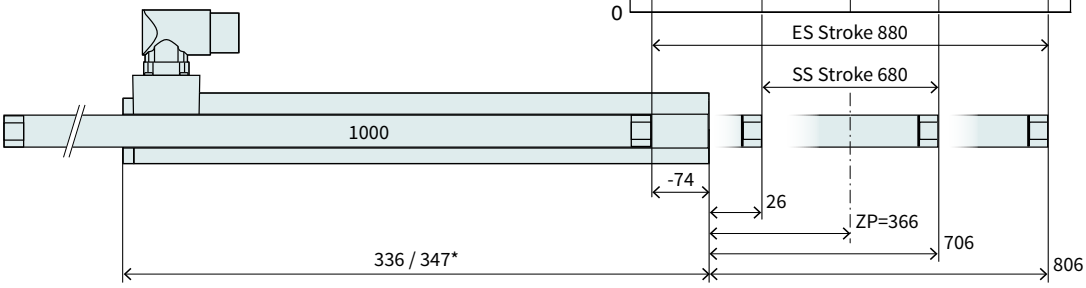

Dimensions in mm
*Cable Type

Technical Data P01-37x240F/680x880-LC				
Stroke				
Standard Stroke (SS)	mm	(in)	680	(26.8)
Extended Stroke (ES)	mm	(in)	880	(34.6)
Force				
Max. Force @ 48VDC	N	(lbf)	205	(46.2)
Max. Force @ 72VDC	N	(lbf)	308	(69.2)
Max. Cont. Force [Passive cooling/ Fan / Fluid]	N	(lbf)	52 / 96 / -	(12 / 22 / -)
Max. Border Force relative	%		58	
Force Constant	N/A_{pk}	(lbf/A_{pk})	25.8	(5.8)
Velocity				
Max. Velocity @ 48VDC	m/s	(in/s)	1.6	(66.9)
Max. Velocity @ 72VDC	m/s	(in/s)	2.5	(99.9)
Position Detection				
Repeatability	mm	(in)	±0.05	(±0.002)
Linearity	%		± 0.15	
Electrical Data				
Max. Current @ 48VDC	A_{pk}		7.9	
Max. Current @ 72VDC	A_{pk}		11.8	
Max. Cont. Current [Passive cooling /Fan / Fluid]	A_{pk}		2 / 3.7 / -	
Thermal Data				
Max. Winding Temperature (Sensor)	°C		90	
Thermal Resistance [Passive cooling / Fan / Fluid]	°K/W		2 / 0.58 / -	
Thermal Time Constant [Passive cooling / Fan / Fluid]	s		1300 / 390 / -	
Mechanical Data				
Slider Length	mm	(in)	1000	(39)
Slider Mass	g	(lb)	2230	(4.91)

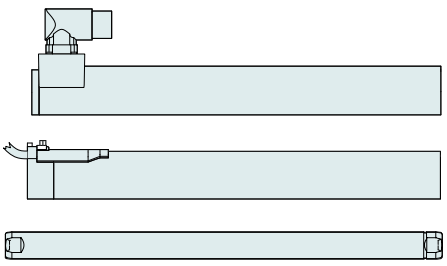

Item	Description	Item-No.
PS01-37x240F-C	Stator with IP67 Connector M23/9(m)	0150-1225
PS01-37x240F-C20	Stator, 0.2m Cable, IP67 St. M23/9(m)	0150-1239
PL01-20x1000/940-LC	Slider 'standard LC'	0150-2568

P01-37x240F/880x1080-LC

Max. Stroke: 1080 mm
Peak Force: 308 N

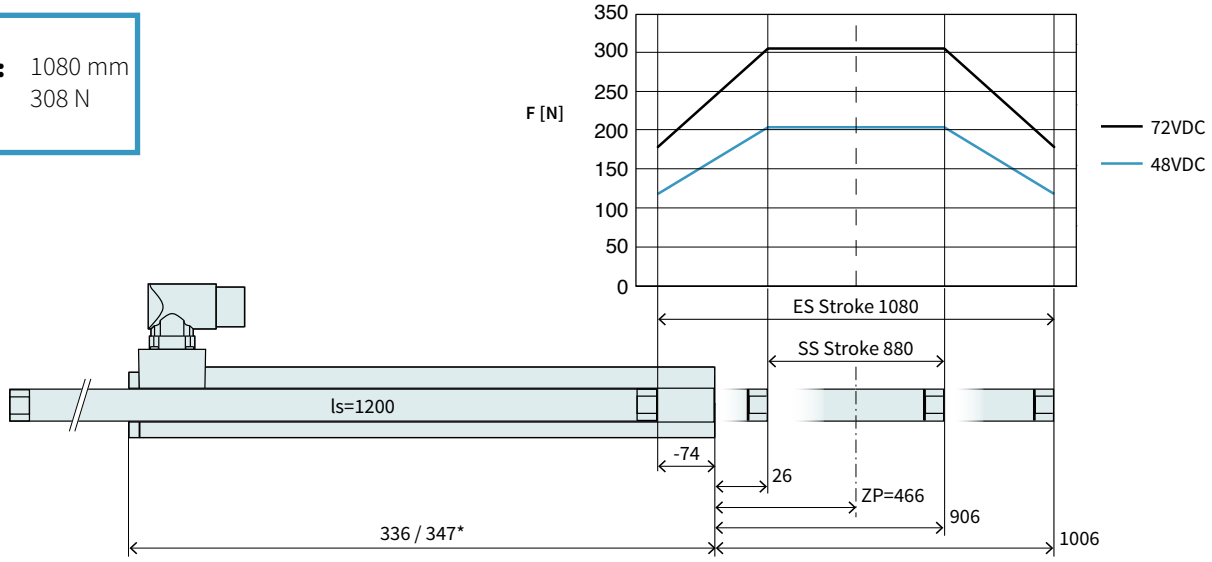

Dimensions in mm
*Cable Type

Technical Data P01-37x240F/880x1080-LC				
Stroke				
Standard Stroke (SS)	mm	(in)	880	(34.6)
Extended Stroke (ES)	mm	(in)	1080	(42.49)
Force				
Max. Force @ 48VDC	N	(lbf)	205	(46.2)
Max. Force @ 72VDC	N	(lbf)	308	(69.2)
Max. Cont. Force [Passive cooling/ Fan / Fluid]	N	(lbf)	52 / 96 / -	(12 / 22 / -)
Max. Border Force relative	%		58	
Force Constant	N/A_{pk}	(lbf/A_{pk})	25.8	(5.8)
Velocity				
Max. Velocity @ 48VDC	m/s	(in/s)	1.6	(66.9)
Max. Velocity @ 72VDC	m/s	(in/s)	2.5	(99.9)
Position Detection				
Repeatability	mm	(in)	±0.05	(±0.002)
Linearity	%		± 0.15	
Electrical Data				
Max. Current @ 48VDC	A_{pk}		7.9	
Max. Current @ 72VDC	A_{pk}		11.8	
Max. Cont. Current [Passive cooling /Fan / Fluid]	A_{pk}		2 / 3.7 / -	
Thermal Data				
Max. Winding Temperature (Sensor)	°C		90	
Thermal Resistance [Passive cooling / Fan / Fluid]	°K/W		2 / 0.58 / -	
Thermal Time Constant [Passive cooling / Fan / Fluid]	s		1300 / 390 / -	
Mechanical Data				
Slider Length	mm	(in)	1200	(47)
Slider Mass	g	(lb)	2690	(5.92)

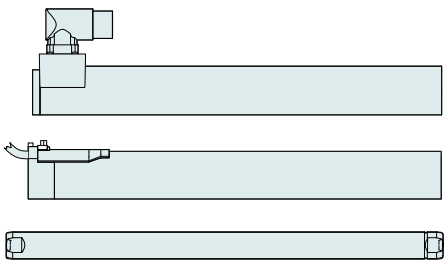

Item	Description	Item-No.
PS01-37x240F-C	Stator with IP67 Connector M23/9(m)	0150-1225
PS01-37x240F-C20	Stator, 0.2m Cable, IP67 St. M23/9(m)	0150-1239
PL01-20x1200/1140-LC	Slider 'standard LC'	0150-2569

P01-37x240F/1080x1280-LC

Max. Stroke: 1280 mm
Peak Force: 308 N

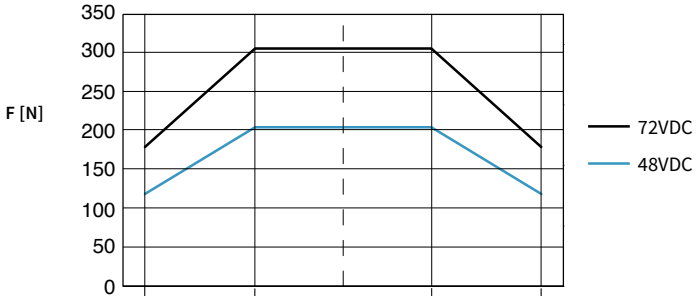

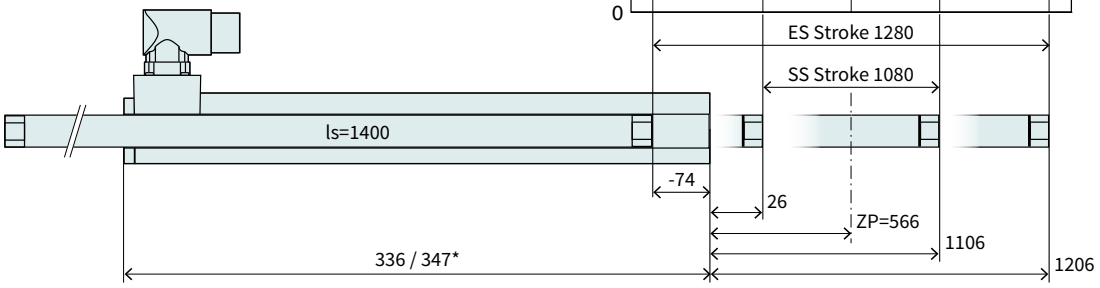

Dimensions in mm
*Cable Type

Technical Data P01-37x240F/1080x1280-LC				
Stroke				
Standard Stroke (SS)	mm	(in)	1080	(42.49)
Extended Stroke (ES)	mm	(in)	1280	(50.39)
Force				
Max. Force @ 48VDC	N	(lbf)	205	(46.2)
Max. Force @ 72VDC	N	(lbf)	308	(69.2)
Max. Cont. Force [Passive cooling/ Fan / Fluid]	N	(lbf)	52 / 96 / -	(12 / 22 / -)
Max. Border Force relative	%		58	
Force Constant	N/A_{pk}	(lbf/A_{pk})	25.8	(5.8)
Velocity				
Max. Velocity @ 48VDC	m/s	(in/s)	1.6	(66.9)
Max. Velocity @ 72VDC	m/s	(in/s)	2.5	(99.9)
Position Detection				
Repeatability	mm	(in)	±0.05	(±0.002)
Linearity	%		± 0.15	
Electrical Data				
Max. Current @ 48VDC	A_{pk}		7.9	
Max. Current @ 72VDC	A_{pk}		11.8	
Max. Cont. Current [Passive cooling /Fan / Fluid]	A_{pk}		2 / 3.7 / -	
Thermal Data				
Max. Winding Temperature (Sensor)	°C		90	
Thermal Resistance [Passive cooling / Fan / Fluid]	°K/W		2 / 0.58 / -	
Thermal Time Constant [Passive cooling / Fan / Fluid]	s		1300 / 390 / -	
Mechanical Data				
Slider Length	mm	(in)	1400	(55)
Slider Mass	g	(lb)	3160	(6.95)

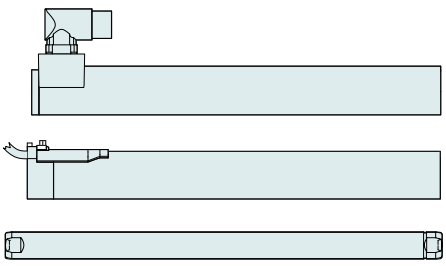

Item	Description	Item-No.
PS01-37x240F-C	Stator with IP67 Connector M23/9(m)	0150-1225
PS01-37x240F-C20	Stator, 0.2m Cable, IP67 St. M23/9(m)	0150-1239
PL01-20x1400/1340-LC	Slider 'standard LC'	0150-2570

P01-37x240F/1280x1480-LC

Max. Stroke: 1480 mm
Peak Force: 308 N

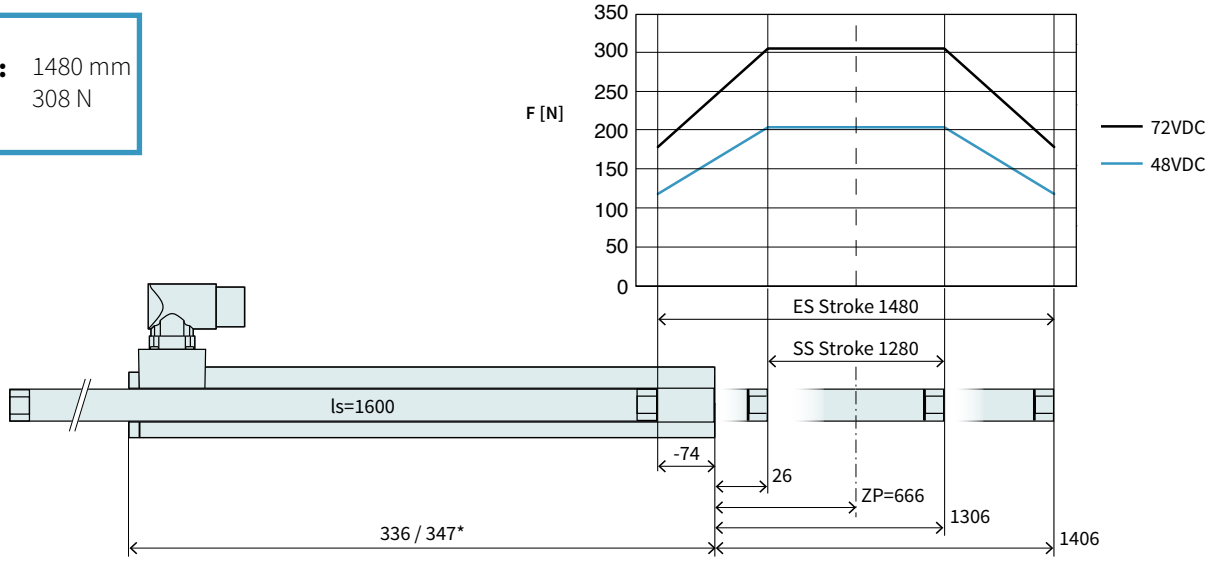

Dimensions in mm
*Cable Type

Technical Data P01-37x240F/1280x1480-LC				
Stroke				
Standard Stroke (SS)	mm	(in)	1280	(50.39)
Extended Stroke (ES)	mm	(in)	1480	(58.29)
Force				
Max. Force @ 48VDC	N	(lbf)	205	(46.2)
Max. Force @ 72VDC	N	(lbf)	308	(69.2)
Max. Cont. Force [Passive cooling/ Fan / Fluid]	N	(lbf)	52 / 96 / -	(12 / 22 / -)
Max. Border Force relative	%		58	
Force Constant	N/A_{pk}	(lbf/A_{pk})	25.8	(5.8)
Velocity				
Max. Velocity @ 48VDC	m/s	(in/s)	1.6	(66.9)
Max. Velocity @ 72VDC	m/s	(in/s)	2.5	(99.9)
Position Detection				
Repeatability	mm	(in)	±0.05	(±0.002)
Linearity	%		± 0.15	
Electrical Data				
Max. Current @ 48VDC	A_{pk}		7.9	
Max. Current @ 72VDC	A_{pk}		11.8	
Max. Cont. Current [Passive cooling /Fan / Fluid]	A_{pk}		2 / 3.7 / -	
Thermal Data				
Max. Winding Temperature (Sensor)	°C		90	
Thermal Resistance [Passive cooling / Fan / Fluid]	°K/W		2 / 0.58 / -	
Thermal Time Constant [Passive cooling / Fan / Fluid]	s		1300 / 390 / -	
Mechanical Data				
Slider Length	mm	(in)	1600	(63)
Slider Mass	g	(lb)	3620	(7.9)

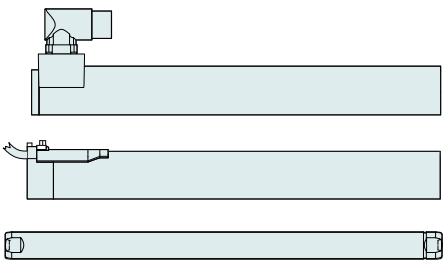

Item	Description	Item-No.
PS01-37x240F-C	Stator with IP67 Connector M23/9(m)	0150-1225
PS01-37x240F-C20	Stator, 0.2m Cable, IP67 St. M23/9(m)	0150-1239
PL01-20x1600/1540-LC	Slider 'standard LC'	0150-2571

Linear Guides H01



HM01-37x240/60	Linear Module 37x240 with 60 mm Stroke		
H-Guide	H01-37x286/60	H-Guide for P01-37x240, Stroke max 60mm	0150-5023
	H01-37x286/60-GF	H-Guide for P01-37x240, Stroke max 60mm	0150-5083
Stator	PS01-37x240F-C	Stator with IP67 Connector M23/9(m)	0150-1225
	PS01-37x240F-C20	Stator, 0.2m Cable, IP67 St. M23/9(m)	0150-1239
Slider	PL01-20x400/340-LC	Slider 'standard LC'	0150-2562

HM01-37x240/160	Linear Module 37x240 with 160 mm Stroke		
H-Guide	H01-37x286/160	H-Guide for P01-37x240, Stroke max 160mm	0150-5024
	H01-37x286/160-GF	H-Guide for P01-37x240, Stroke max 160mm	0150-5084
Stator	PS01-37x240F-C	Stator with IP67 Connector M23/9(m)	0150-1225
	PS01-37x240F-C20	Stator, 0.2m Cable, IP67 St. M23/9(m)	0150-1239
Slider	PL01-20x500/440-LC	Slider 'standard LC'	0150-2563

HM01-37x240/260	Linear Module 37x240 with 260 mm Stroke		
H-Guide	H01-37x286/260	H-Guide for P01-37x240, Stroke max 260mm	0150-5025
	H01-37x286/260-GF	H-Guide for P01-37x240, Stroke max 260mm	0150-5085
Stator	PS01-37x240F-C	Stator with IP67 Connector M23/9(m)	0150-1225
	PS01-37x240F-C20	Stator, 0.2m Cable, IP67 St. M23/9(m)	0150-1239
Slider	PL01-20x600/540-LC	Slider 'standard LC'	0150-2564

Accessories			
Brake	HB01-37	Pneumatic Brake for H01-37/600N (4-6Bar)	0150-5052
Fan	HV01-37/48	Fan cooling for H01-37/48 &PF02-37/48	0150-5051
MagSpring	MF01-37/H37	Flange MagSpring 37 / H-Guide 23/37/48	0250-2307
	MA01-37/H37	Adapter MagSpring 37&20 / H-Guide 37	0250-0117
Centering sleeve	HC01-09/04	Centering sleeve D9x4 mm	0150-3251
Wipers	HA01-27/20-F	Wiper for H01-37 guides, front side	0150-5108

FIND MORE PRODUCT DETAILS IN THE CHAPTER "LINEAR GUIDES".

Bridge Guide B01



BM01-37x240/140	**Bridge Module 37x240 with 140 mm Stroke [1]**			
→	B-Guide	B01-37x286/140	B-Guide for P01-37x240, Stroke max 140mm	0150-5144
		B01-37x286/140-GF	B-Guide for P01-37x240, Stroke max 140mm	0150-5147
→	Stator	PS01-37x240F-C	Stator with IP67 Connector M23/9(m)	0150-1225
		PS01-37x240F-C20	Stator, 0.2m Cable, IP67 St. M23/9(m)	0150-1239
→	Slider	PL01-19x500/420	Slider 'high clearance'	0150-1455
BM01-37x240/240	**Bridge Module 37x240 with 240 mm Stroke [1]**			
→	B-Guide	B01-37x286/240	B-Guide for P01-37x240, Stroke max 240mm	0150-5145
		B01-37x286/240-GF	B-Guide for P01-37x240, Stroke max 240mm	0150-5148
→	Stator	PS01-37x240F-C	Stator with IP67 Connector M23/9(m)	0150-1225
		PS01-37x240F-C20	Stator, 0.2m Cable, IP67 St. M23/9(m)	0150-1239
→	Slider	PL01-19x600/520	Slider 'high clearance'	0150-1456
BM01-37x240/340	**Bridge Module 37x240 with 340 mm Stroke [1]**			
→	B-Guide	B01-37x286/340	B-Guide for P01-37x240, Stroke max 340mm	0150-5146
		B01-37x286/340-GF	B-Guide for P01-37x240, Stroke max 340mm	0150-5149
→	Stator	PS01-37x240F-C	Stator with IP67 Connector M23/9(m)	0150-1225
		PS01-37x240F-C20	Stator, 0.2m Cable, IP67 St. M23/9(m)	0150-1239
→	Slider	PL01-19x700/620	Slider 'high clearance'	0150-1457

Accessories				
→	Brake	HB01-37	Pneumatic Brake for H01-37/600N (4-6 Bar)	0150-5052
→	Fan	HV01-37/48	Fan cooling for H01-37/48 &PF02-37/48	0150-5051
→	MagSpring	MF01-37/H37	Flange MagSpring 37 / H-Guide 23/37/48	0250-2307
		MA01-37/H37	Adapter MagSpring 37&20 / H-Guide 37	0250-0117
→	Centering sleeve	HC01-09/04	Centering sleeve D9x4 mm	0150-3251
→	Wipers	HA01-27/20-F	Wiper for H01-37 guides, front side	0150-5108

[1] The stroke is reduced by 18mm when using cable models.

FIND MORE PRODUCT DETAILS IN THE CHAPTER "LINEAR GUIDES".

Motor Cable

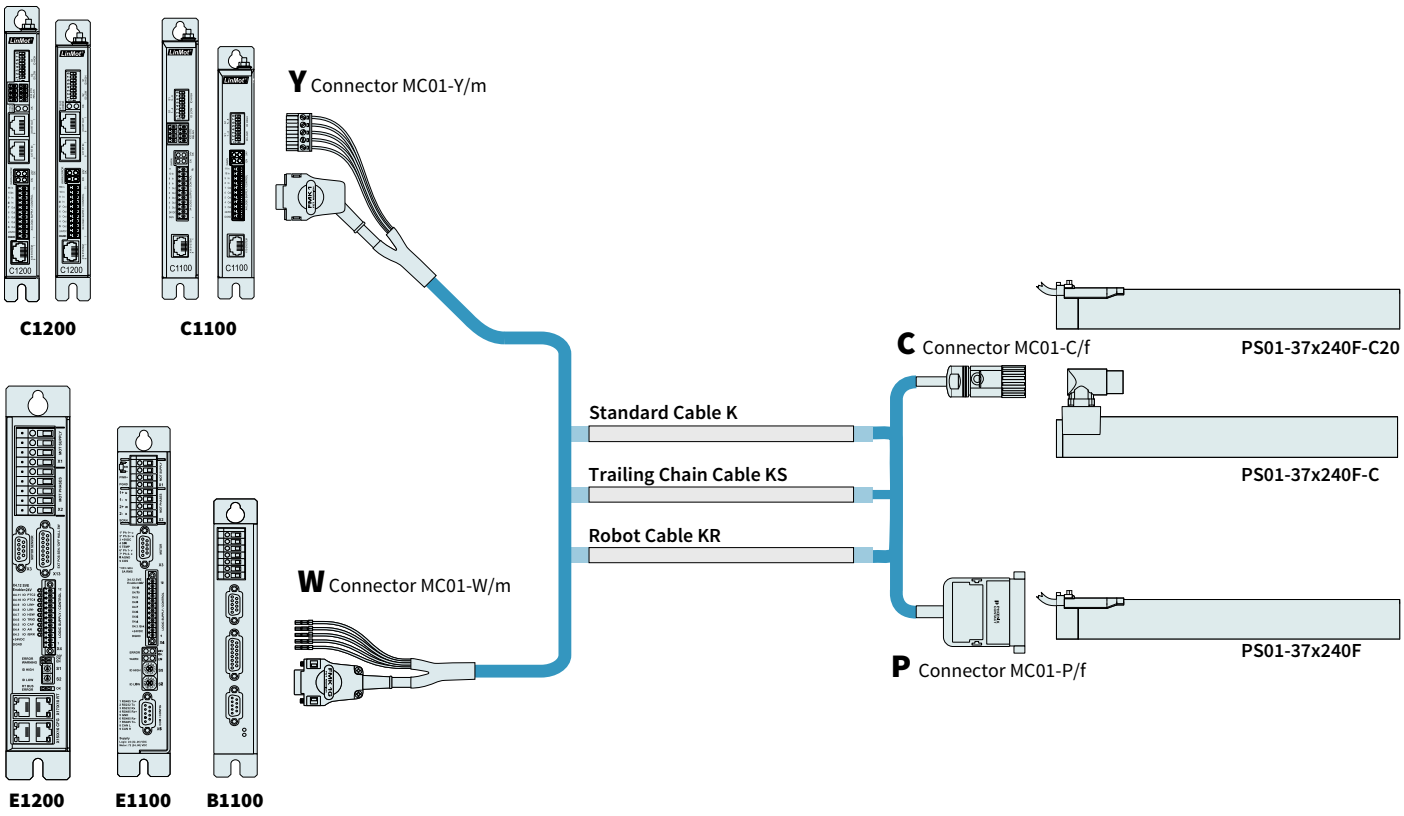

ORDERING INFORMATION

STANDARD CABLE		
Item	**Description**	**Item-No.**
K05-W/C-2	Motor Cable W/C, 2 m	0150-2123
K05-W/C-4	Motor Cable W/C, 4 m	0150-2124
K05-W/C-6	Motor Cable W/C, 6 m	0150-2125
K05-W/C-8	Motor Cable W/C, 8 m	0150-2126
K05-W/C-	Motor Cable W/C, Custom length	0150-3263
K05-Y/C-2	Motor Cable Y/R, 2 m	0150-2425
K05-Y/C-4	Motor Cable Y/R, 4 m	0150-2426
K05-Y/C-6	Motor Cable Y/R, 6 m	0150-2427
K05-Y/C-8	Motor Cable Y/R, 8 m	0150-2428
K05-Y-Fe/C-	Motor Cable Y-Fe/R, Custom length	0150-3502

TRAILING CHAIN CABLE		
Item	**Description**	**Item-No.**
KS05-W/C-4	Trailing Chain Cable W/C, 4 m	0150-2127
KS05-W/C-6	Trailing Chain Cable W/C, 6 m	0150-2128
KS05-W/C-8	Trailing Chain Cable W/C, 8 m	0150-2129
KS05-W/C-	Trailing Chain Cable W/C, Custom length	0150-3204
KS05-Y/C-4	Trailing Chain Cable Y/C, 4 m	0150-2436
KS05-Y/C-6	Trailing Chain Cable Y/C, 6 m	0150-2437
KS05-Y/C-8	Trailing Chain Cable Y/C, 8 m	0150-2438
KS05-Y/C-	Trailing Chain Cable Y-Fe/C, Custom length	0150-3508

ROBOT CABLE		
Item	**Description**	**Item-No.**
KR05-W/C-	Robot Cable KR05-W/C, Custom length	0150-3644
KR05-Y-Fe/C-	Robot Cable KR05-Y-Fe/C, Custom length	0150-3513

CONNECTOR & CABLE (INDIVIDUAL)		
Item	**Description**	**Item-No.**
MC01-W/m	Motor Connector W/m	0150-3140
MC01-Y-Fe/m	Motor Connector Y-Fe/m	0150-3289
MC01-C/f	Motor Connector C/f	0150-3080
K05-04/05	Motor Cable per m	0150-1920
KS05-04/05	Trailing Chain Cable per m	0150-1938
KR05-04/05	Robot Cable per m	0150-1846

MOTOR FLANGES



Item	Description	Item-No.
PF02-37x200	Flange 37x200 mm	0150-1999

FIND MORE PRODUCT DETAILS IN THE CHAPTER "ACCESSORIES".

FANS



Item	Description	Item-No.
HV01-37/48	Fan cooling for H01-37, B01-37 and PF02-37	0150-5051

FIND MORE PRODUCT DETAILS IN THE CHAPTER "ACCESSORIES".

SLIDER MOUNTING



Item	Description	Item-No.
PLF01-20	Fixed Bearing Set for 19mm and 20mm Slider	0150-3083
PLF01-20-SS	Fixed Bearing Set for 19mm and 20mm Slider, Stainless steel	0150-3296
PLL01-19	Floating Bearing for PL01-19 Slider	0150-3335
PLL01-20	Floating Bearing for PL01-20 Slider	0150-3084
PLM01-20-MK	Mounting Kit for PL01-20 Slider	0150-3079

FIND MORE PRODUCT DETAILS IN THE CHAPTER "ACCESSORIES".

WIPERS



Item	Description	Item-No.
PA01-37/19-F	Wipers for PS01-37x...	0150-3225
PA01-37/19-R	Wipers for PS01-37x...-C	0150-3226
PA01-37/19-R cable	Wipers for PS01-37x... Cable Type	0150-3227
PA01-37/20-F	Wipers for PS01-37x...	0150-3126
PA01-37/20-R	Wipers for PS01-37x...-C	0150-3201
PA01-37/20-R cable	Wipers for PS01-37x...-Cable Type	0150-3221

FIND MORE PRODUCT DETAILS IN THE CHAPTER "ACCESSORIES".

EXTERNAL POSITION SENSORS



Item	Description	Item-No.
MS01-1/D	Linear Encoder 1µm, A/B (for inc. strip)	0150-1840
MB01-1000	Magnetic incremental strip for MS01-1/D, per cm	0150-1963
KS025-D/D-Encoder	Encoder Cable (Length in m)	0150-3166
KS025-D/D15-Encoder	Encoder Cable (Length in m)	0150-3168

FIND MORE PRODUCT DETAILS IN THE CHAPTER "ACCESSORIES".



Item	Description	Item-No.
MS01-1/D-SSI	Linear Encoder 1µm, A/B (for absolute strip)	0150-2095
MB01-1000-ABS	Magnetic absolute strip for MS01-1/D-SSI (per cm)	0150-2096
EC01-ABS/ENC-12-S	MS01-1/D-SSI Encoder connector straight	0150-3616
KSS01-12-D15/ABS-ENC	Special cable for MS01-1/D-SSI on C1100/C1200/C1400/E1200/E1400 Drives	0150-3652

FIND MORE PRODUCT DETAILS IN THE CHAPTER "ACCESSORIES".

LINEAR MOTORS P01-48x240



- Highly dynamic drives
- Wide stroke range
- Available with rotatable connector
- Optional with air cooling
- Wide range of applications in handling modules as well as in plant and machine construction

LINEAR MOTORS P01-48x240

Technical Data ____ **319**

Motor Specifications

P01-48x240/30x180 ..... **323**

P01-48x240/90x240 ..... **324**

P01-48x240/180x330 ..... **325**

P01-48x240/300x450 ..... **326**

P01-48x240/390x540 ..... **327**

P01-48x240/480x630 ..... **328**

P01-48x240/600x750 ..... **329**

P01-48x240/690x840 ..... **330**

P01-48x240/900x1050 ..... **331**

P01-48x240/1080x1230 ..... **332**

P01-48x240/1290x1440 ..... **333**

P01-48x240/1500x1650 ..... **334**

P01-48x240/1680x1830 ..... **335**

Linear Guides ____ **336**

Accessories ____ **338**



MOTOR FAMILY P01-48x240

Technical Data				
Stroke				
Standard Stroke (SS)	mm	(in)	≤ 1680	(≤ 66.1)
Extended Stroke (ES)	mm	(in)	≤ 1830	(≤ 72)
Force				
Max. Force @ 48VDC	N	(lbf)	497	(112)
Max. Force @ 72VDC	N	(lbf)	585	(132)
Max. Cont. Force [Passive cooling/ Fan / Fluid]	N	(lbf)	140 / 250 / -	(32 / 56 / -)
Max. Border Force relative	%		≤ 69	
Force Constant	N/A_{pk}	(lbf/A_{pk})	39	(8.77)
Velocity				
Max. Velocity @ 48VDC	m/s	(in/s)	1.1	(44.9)
Max. Velocity @ 72VDC	m/s	(in/s)	1.6	(66.9)
Position Detection				
Position Resolution	mm	(in)	0.007	(0.0003)
Repeatability	mm	(in)	±0.05	(±0.002)
Position Resolution with ES	mm	(in)	0.001	(0.00004)
Repeatability with ES	mm	(in)	±0.01	(±0.0004)
Linearity with ES	mm	(in)	±0.01	(±0.0004)
Electrical Data				
Max. Current @ 48VDC	A_{pk}		12.6	
Max. Current @ 72VDC	A_{pk}		14.9	
Max. Cont. Current [Passive cooling /Fan / Fluid]	A_{pk}		3.6 / 6.4 / -	
Terminal Resistance 25 °C / 120 °C	Ohm		3.1 / 4.2	
Terminal Inductivity	mH		3	
Magnetic Period	mm	(in)	60	(2.35)
Thermal Data				
Max. Winding Temperature (Sensor)	°C		90	
Thermal Resistance [Passive cooling / Fan / Fluid]	°K/W		0.95 / 0.31 / -	
Thermal Time Constant [Passive cooling / Fan / Fluid]	s		970 / 320 / -	
Mechanical Data				
Stator Diameter	mm	(in)	48	(1.9)
Stator Length [Connector type / Cable type]	mm	(in)	289.5	(11)
Stator Mass	g	(lb)	1930	(4.25)
Slider Diameter	mm	(in)	28	(1.1)
Slider Length	mm	(in)	350 - 2000	(14 - 79)
Slider Mass	g	(lb)	1460 - 9140	(3.21 - 20.1)
IP Code			IP 65	

STATOR

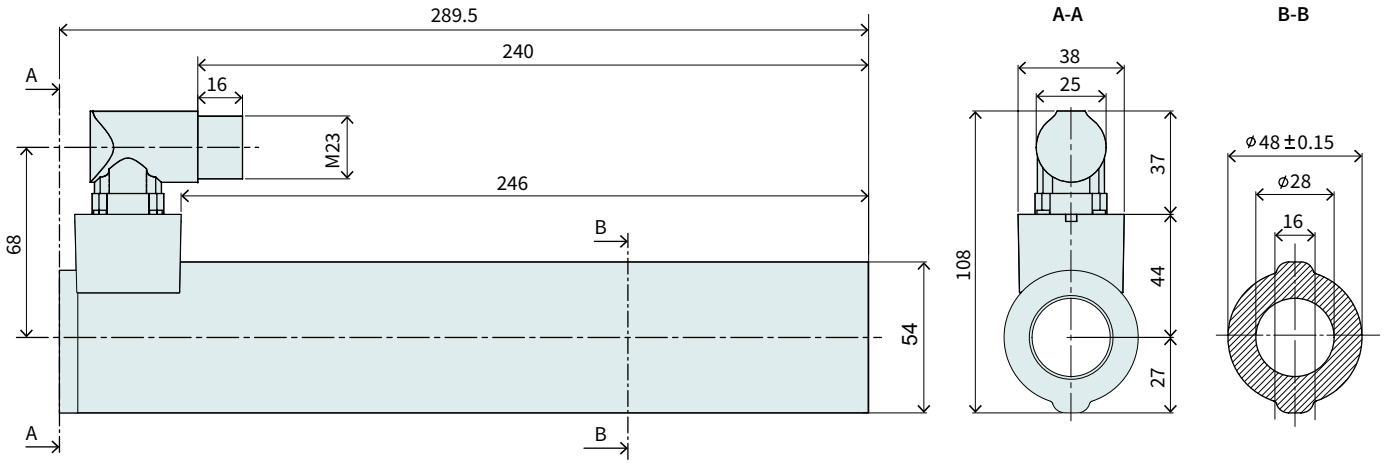

Item	Description	Item-No.
PS01-48x240-C	Stator with IP67 Connector M23/9(m)	0150-1219

CONNECTOR

Motor Connector Wiring	PS01-37x240-C PS01-37x240-C20 C-Connector	Wire color motor cable
Ph 1+	A	red
Ph 1-	B	pink
Ph 2+	C	blue
Ph 2-	D	grey
+5VDC	E	white
GND	F	inner shield
Sin	G	yellow
Cos	H	green
Temp.	L	black
Shield	Housing	outer Shield

C-Connector

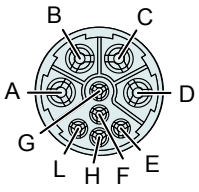

View: Motor Connector, plug side

SLIDER

Slider Standard / Heavy Duty

Number of grooves determines the slider type
(see chapter 2 / slider) and marks the front end.

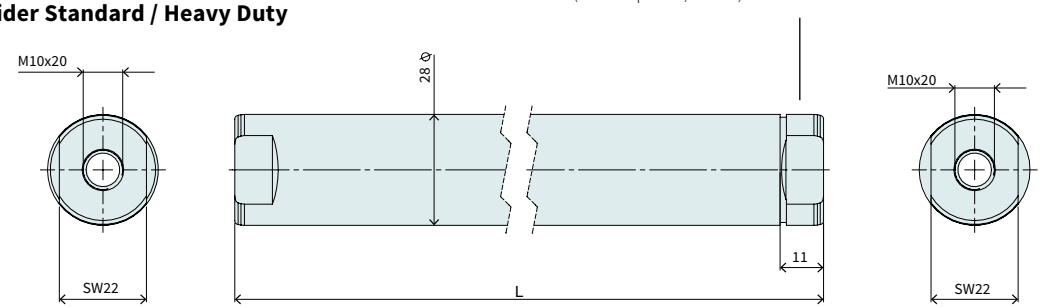

Hollow slider

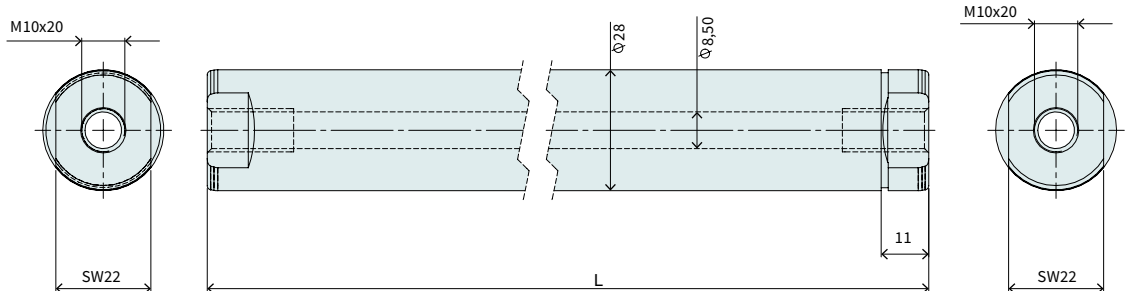

High-Clearance Slider

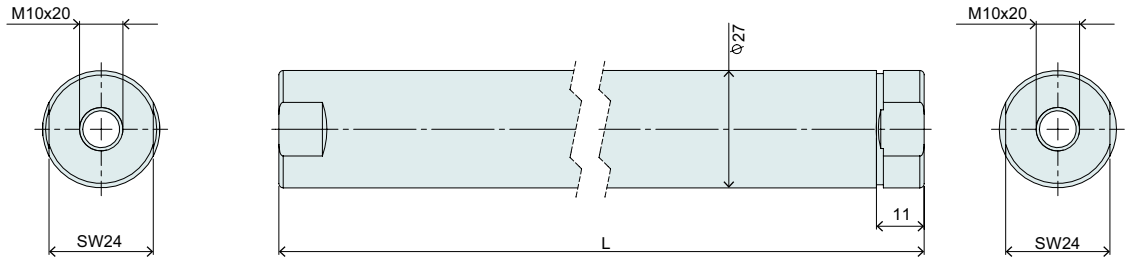

Slider Standard				
Item	Description	Max. Stroke [mm]	Standard Stroke [mm]	Item-No.
PL01-28x350/270	Slider 'standard'	180	30	0150-1380
PL01-28x410/330	Slider 'standard'	240	90	0150-1381
PL01-28x500/420	Slider 'standard'	330	180	0150-1382
PL01-28x620/540	Slider 'standard'	450	300	0150-1383
PL01-28x710/630	Slider 'standard'	540	390	0150-1384
PL01-28x800/720	Slider 'standard'	630	480	0150-1385
PL01-28x920/840	Slider 'standard'	750	600	0150-1386
PL01-28x1010/930	Slider 'standard'	840	690	0150-1387
PL01-28x1220/1140	Slider 'standard'	1050	900	0150-1388
PL01-28x1400/1320	Slider 'standard'	1230	1080	0150-1389
PL01-28x1610/1530	Slider 'standard'	1440	1290	0150-1390
PL01-28x1820/1740	Slider 'standard'	1650	1500	0150-1395
PL01-28x2000/1920	Slider 'standard'	1830	1680	0150-1396

Slider Heavy Duty				
Item	Description	Max. Stroke [mm]	Standard Stroke [mm]	Item-No.
PL02-28x350/270	Slider 'heavy duty'	180	30	0150-1411
PL02-28x410/330	Slider 'heavy duty'	240	90	0150-1412
PL02-28x500/420	Slider 'heavy duty'	330	180	0150-1413
PL02-28x620/540	Slider 'heavy duty'	450	300	0150-1414
PL02-28x710/630	Slider 'heavy duty'	540	390	0150-1415
PL02-28x800/720	Slider 'heavy duty'	630	480	0150-1416
PL02-28x920/840	Slider 'heavy duty'	750	600	0150-1417

Slider Hollow slider				
Item	**Description**	**Max. Stroke [mm]**	**Standard Stroke [mm]**	**Item-No.**
PL01-28x350/270	Slider 'standard L'	180	30	0150-1475
PL01-28x410/330	Slider 'standard L'	240	90	0150-1476
PL01-28x500/420	Slider 'standard L'	330	180	0150-1480
PL01-28x620/540	Slider 'standard L'	450	300	0150-1481
PL01-28x710/630	Slider 'standard L'	540	390	0150-1482
PL01-28x800/720	Slider 'standard L'	630	480	0150-1483
PL01-28x920/840	Slider 'standard L'	750	600	0150-1484

High-Clearance Slider				
Item	**Description**	**Max. Stroke [mm]**	**Standard Stroke [mm]**	**Item-No.**
PL01-27x350/270	Slider 'high clearance'	180	30	0150-1467
PL01-27x410/330	Slider 'high clearance'	240	90	0150-1468
PL01-27x500/420	Slider 'high clearance'	330	180	0150-1469
PL01-27x620/540	Slider 'high clearance'	450	300	0150-1470
PL01-27x710/630	Slider 'high clearance'	540	390	0150-1471

P01-48x240/30x180

Max. Stroke: 180 mm
Peak Force: 585 N

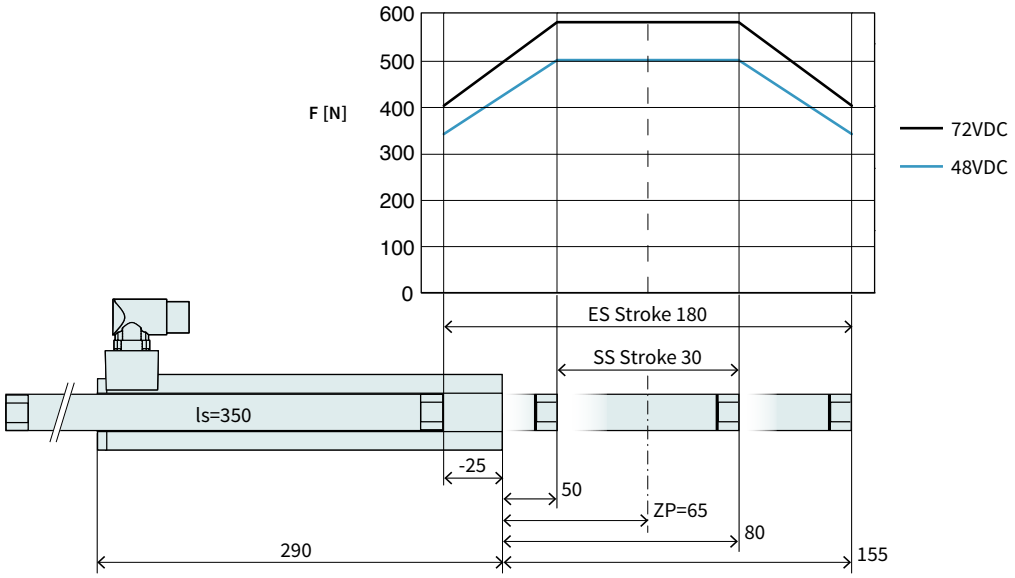

Dimensions in mm

Technical Data P01-48x240/30x180				
Stroke				
Standard Stroke (SS)	mm	(in)	30	(1.17)
Extended Stroke (ES)	mm	(in)	180	(7.08)
Force				
Max. Force @ 48VDC	N	(lbf)	497	(112)
Max. Force @ 72VDC	N	(lbf)	585	(132)
Max. Cont. Force [Passive cooling/ Fan / Fluid]	N	(lbf)	140 / 250 / -	(32 / 56 / -)
Max. Border Force relative	%		69	
Force Constant	N/A_{pk}	(lbf/A_{pk})	39	(8.77)
Velocity				
Max. Velocity @ 48VDC	m/s	(in/s)	1.1	(44.9)
Max. Velocity @ 72VDC	m/s	(in/s)	1.6	(66.9)
Position Detection				
Repeatability	mm	(in)	±0.05	(±0.002)
Linearity	%		± 0.5	
Electrical Data				
Max. Current @ 48VDC	A_{pk}		12.6	
Max. Current @ 72VDC	A_{pk}		14.9	
Max. Cont. Current [Passive cooling /Fan / Fluid]	A_{pk}		3.6 / 6.4 / -	
Thermal Data				
Max. Winding Temperature (Sensor)	°C		90	
Thermal Resistance [Passive cooling / Fan / Fluid]	°K/W		0.95 / 0.31 / -	
Thermal Time Constant [Passive cooling / Fan / Fluid]	s		970 / 320 / -	
Mechanical Data				
Slider Length	mm	(in)	350	(14)
Slider Mass	g	(lb)	1460	(3.21)

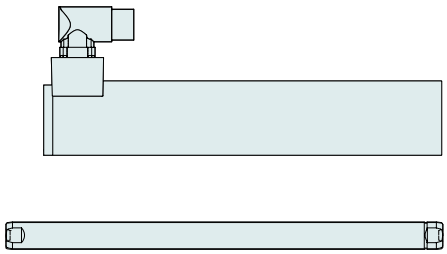

Item	Description	Item-No.
PS01-48x240-C	Stator with IP67 Connector M23/9(m)	0150-1219

PL01-28x350/270	Slider 'standard'	0150-1380
PL02-28x350/270	Slider 'heavy duty'	0150-1411
PL01-28x350/270-L*	Slider 'standard L'	0150-1475
PL01-27x350/270*	Slider 'high clearance'	0150-1467

* With this slider, the motor specifications above change.

P01-48x240/90x240

Max. Stroke: 240 mm
Peak Force: 585 N

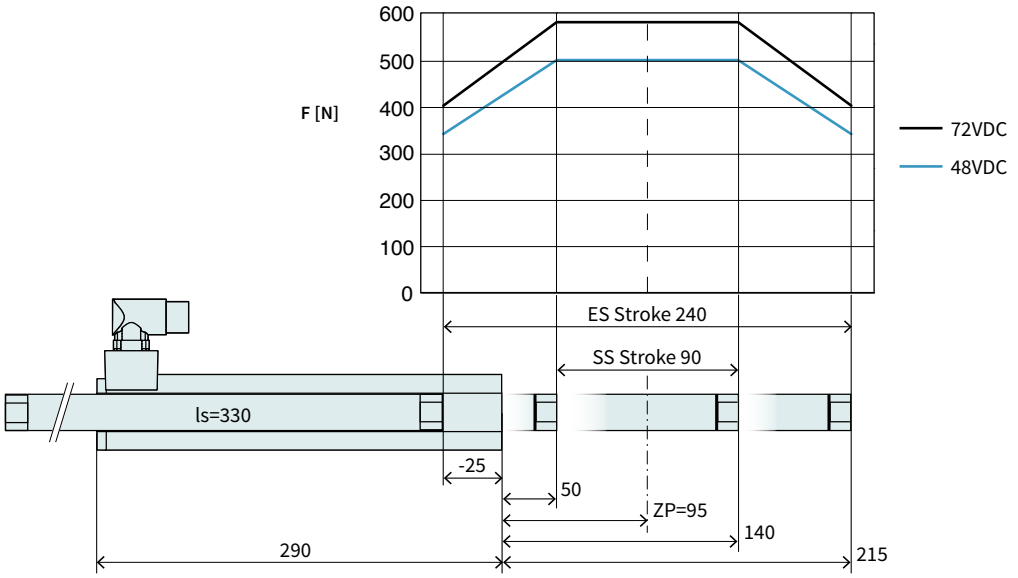

Dimensions in mm

Technical Data P01-48x240/90x240				
Stroke				
Standard Stroke (SS)	mm	(in)	90	(3.53)
Extended Stroke (ES)	mm	(in)	240	(9.44)
Force				
Max. Force @ 48VDC	N	(lbf)	497	(112)
Max. Force @ 72VDC	N	(lbf)	585	(132)
Max. Cont. Force [Passive cooling/ Fan / Fluid]	N	(lbf)	140 / 250 / -	(32 / 56 / -)
Max. Border Force relative	%		69	
Force Constant	N/A_{pk}	(lbf/A_{pk})	39	(8.77)
Velocity				
Max. Velocity @ 48VDC	m/s	(in/s)	1.1	(44.9)
Max. Velocity @ 72VDC	m/s	(in/s)	1.6	(66.9)
Position Detection				
Repeatability	mm	(in)	±0.05	(±0.002)
Linearity	%		± 0.4	
Electrical Data				
Max. Current @ 48VDC	A_{pk}		12.6	
Max. Current @ 72VDC	A_{pk}		14.9	
Max. Cont. Current [Passive cooling /Fan / Fluid]	A_{pk}		3.6 / 6.4 / -	
Thermal Data				
Max. Winding Temperature (Sensor)	°C		90	
Thermal Resistance [Passive cooling / Fan / Fluid]	°K/W		0.95 / 0.31 / -	
Thermal Time Constant [Passive cooling / Fan / Fluid]	s		970 / 320 / -	
Mechanical Data				
Slider Length	mm	(in)	410	(16)
Slider Mass	g	(lb)	1740	(3.83)

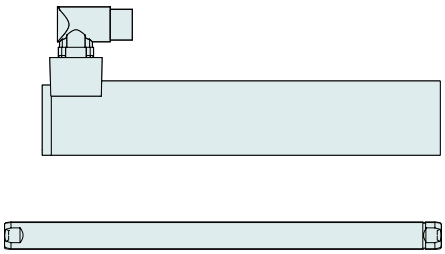

Item	Description	Item-No.
PS01-48x240-C	Stator with IP67 Connector M23/9(m)	0150-1219

PL01-28x410/330	Slider 'standard'	0150-1381
PL02-28x410/330	Slider 'heavy duty'	0150-1412
PL01-28x410/330-L*	Slider 'standard L'	0150-1476
PL01-27x410/330*	Slider 'high clearance'	0150-1468

* With this slider, the motor specifications above change.

P01-48x240/180x330

Max. Stroke: 330 mm
Peak Force: 585 N

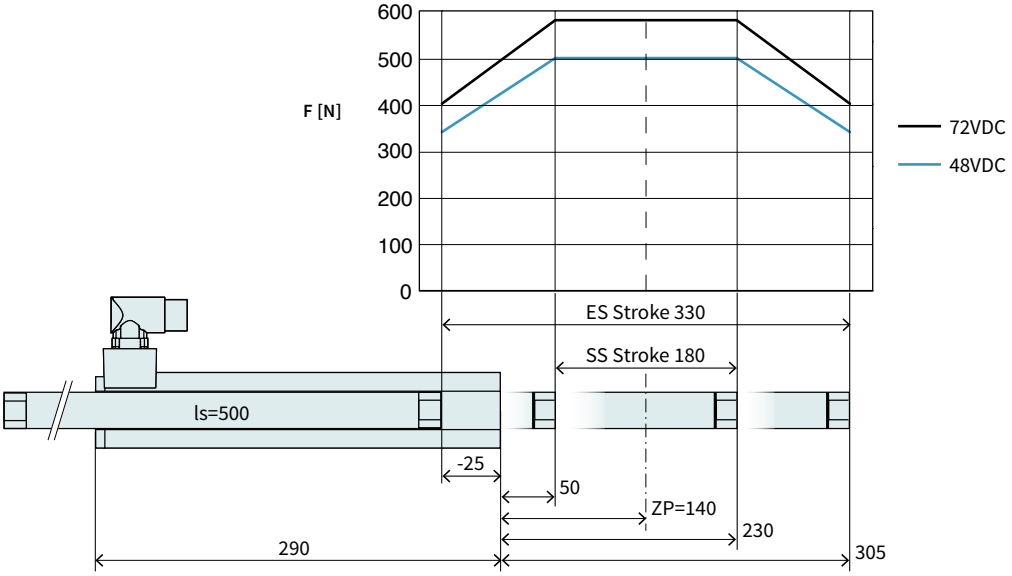

Dimensions in mm

Technical Data P01-48x240/180x330				
Stroke				
Standard Stroke (SS)	mm	(in)	180	(7.08)
Extended Stroke (ES)	mm	(in)	330	(12.99)
Force				
Max. Force @ 48VDC	N	(lbf)	497	(112)
Max. Force @ 72VDC	N	(lbf)	585	(132)
Max. Cont. Force [Passive cooling/ Fan / Fluid]	N	(lbf)	140 / 250 / -	(32 / 56 / -)
Max. Border Force relative	%		69	
Force Constant	N/A_{pk}	(lbf/A_{pk})	39	(8.77)
Velocity				
Max. Velocity @ 48VDC	m/s	(in/s)	1.1	(44.9)
Max. Velocity @ 72VDC	m/s	(in/s)	1.6	(66.9)
Position Detection				
Repeatability	mm	(in)	±0.05	(±0.002)
Linearity	%		± 0.35	
Electrical Data				
Max. Current @ 48VDC	A_{pk}		12.6	
Max. Current @ 72VDC	A_{pk}		14.9	
Max. Cont. Current [Passive cooling /Fan / Fluid]	A_{pk}		3.6 / 6.4 / -	
Thermal Data				
Max. Winding Temperature (Sensor)	°C		90	
Thermal Resistance [Passive cooling / Fan / Fluid]	°K/W		0.95 / 0.31 / -	
Thermal Time Constant [Passive cooling / Fan / Fluid]	s		970 / 320 / -	
Mechanical Data				
Slider Length	mm	(in)	500	(20)
Slider Mass	g	(lb)	2160	(4.75)

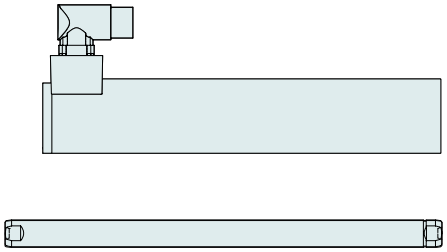

Item	Description	Item-No.
PS01-48x240-C	Stator with IP67 Connector M23/9(m)	0150-1219

PL01-28x500/420	Slider 'standard'	0150-1382
PL02-28x500/420	Slider 'heavy duty'	0150-1413
PL01-28x500/420-L*	Slider 'standard L'	0150-1480
PL01-27x500/420*	Slider 'high clearance'	0150-1469

* With this slider, the motor specifications above change.

P01-48x240/300x450

Max. Stroke: 450 mm
Peak Force: 585 N

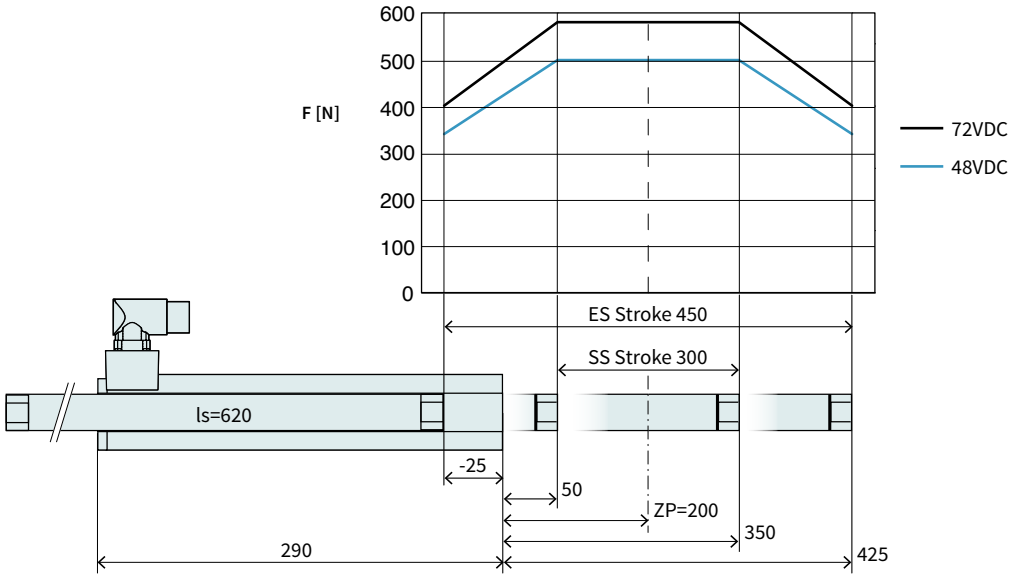

Dimensions in mm

Technical Data P01-48x240/300x450				
Stroke				
Standard Stroke (SS)	mm	(in)	300	(11.8)
Extended Stroke (ES)	mm	(in)	450	(17.69)
Force				
Max. Force @ 48VDC	N	(lbf)	497	(112)
Max. Force @ 72VDC	N	(lbf)	585	(132)
Max. Cont. Force [Passive cooling/ Fan / Fluid]	N	(lbf)	140 / 250 / -	(32 / 56 / -)
Max. Border Force relative	%		69	
Force Constant	N/A_{pk}	(lbf/A_{pk})	39	(8.77)
Velocity				
Max. Velocity @ 48VDC	m/s	(in/s)	1.1	(44.9)
Max. Velocity @ 72VDC	m/s	(in/s)	1.6	(66.9)
Position Detection				
Repeatability	mm	(in)	±0.05	(±0.002)
Linearity	%		± 0.25	
Electrical Data				
Max. Current @ 48VDC	A_{pk}		12.6	
Max. Current @ 72VDC	A_{pk}		14.9	
Max. Cont. Current [Passive cooling /Fan / Fluid]	A_{pk}		3.6 / 6.4 / -	
Thermal Data				
Max. Winding Temperature (Sensor)	°C		90	
Thermal Resistance [Passive cooling / Fan / Fluid]	°K/W		0.95 / 0.31 / -	
Thermal Time Constant [Passive cooling / Fan / Fluid]	s		970 / 320 / -	
Mechanical Data				
Slider Length	mm	(in)	620	(24)
Slider Mass	g	(lb)	2720	(5.98)





Item	Description	Item-No.
PS01-48x240-C	Stator with IP67 Connector M23/9(m)	0150-1219

PL01-28x620/540	Slider 'standard'	0150-1383
PL02-28x620/540	Slider 'heavy duty'	0150-1414
PL01-28x620/540-L*	Slider 'standard L'	0150-1481
PL01-27x620/540*	Slider 'high clearance'	0150-1470

* With this slider, the motor specifications above change.

P01-48x240/390x540

Max. Stroke: 540 mm
Peak Force: 585 N

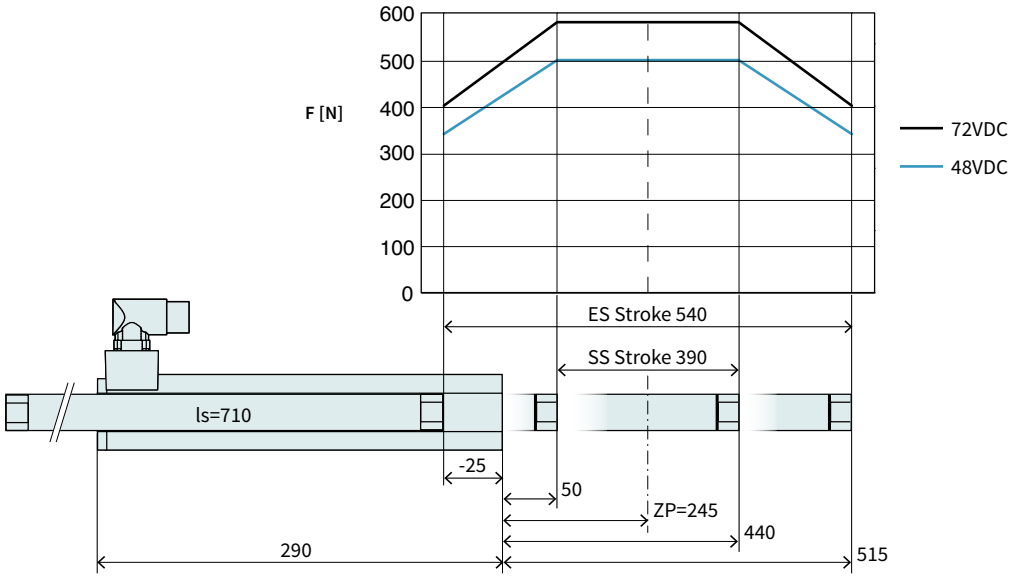

Dimensions in mm

Technical Data P01-48x240/390x540				
Stroke				
Standard Stroke (SS)	mm	(in)	390	(15.4)
Extended Stroke (ES)	mm	(in)	540	(21.3)
Force				
Max. Force @ 48VDC	N	(lbf)	497	(112)
Max. Force @ 72VDC	N	(lbf)	585	(132)
Max. Cont. Force [Passive cooling/ Fan / Fluid]	N	(lbf)	140 / 250 / -	(32 / 56 / -)
Max. Border Force relative	%		69	
Force Constant	N/A_{pk}	(lbf/A_{pk})	39	(8.77)
Velocity				
Max. Velocity @ 48VDC	m/s	(in/s)	1.1	(44.9)
Max. Velocity @ 72VDC	m/s	(in/s)	1.6	(66.9)
Position Detection				
Repeatability	mm	(in)	±0.05	(±0.002)
Linearity	%		± 0.25	
Electrical Data				
Max. Current @ 48VDC	A_{pk}		12.6	
Max. Current @ 72VDC	A_{pk}		14.9	
Max. Cont. Current [Passive cooling /Fan / Fluid]	A_{pk}		3.6 / 6.4 / -	
Thermal Data				
Max. Winding Temperature (Sensor)	°C		90	
Thermal Resistance [Passive cooling / Fan / Fluid]	°K/W		0.95 / 0.31 / -	
Thermal Time Constant [Passive cooling / Fan / Fluid]	s		970 / 320 / -	
Mechanical Data				
Slider Length	mm	(in)	710	(28)
Slider Mass	g	(lb)	3140	(6.91)

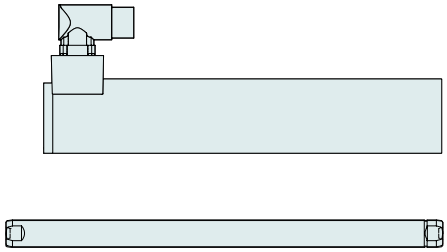

Item	Description	Item-No.
PS01-48x240-C	Stator with IP67 Connector M23/9(m)	0150-1219

PL01-28x710/630	Slider 'standard'	0150-1384
PL02-28x710/630	Slider 'heavy duty'	0150-1415
PL01-28x710/630-L*	Slider 'standard L'	0150-1482
PL01-27x710/630*	Slider 'high clearance'	0150-1471

* With this slider, the motor specifications above change.

P01-48x240/480x630

Max. Stroke: 630 mm
Peak Force: 585 N

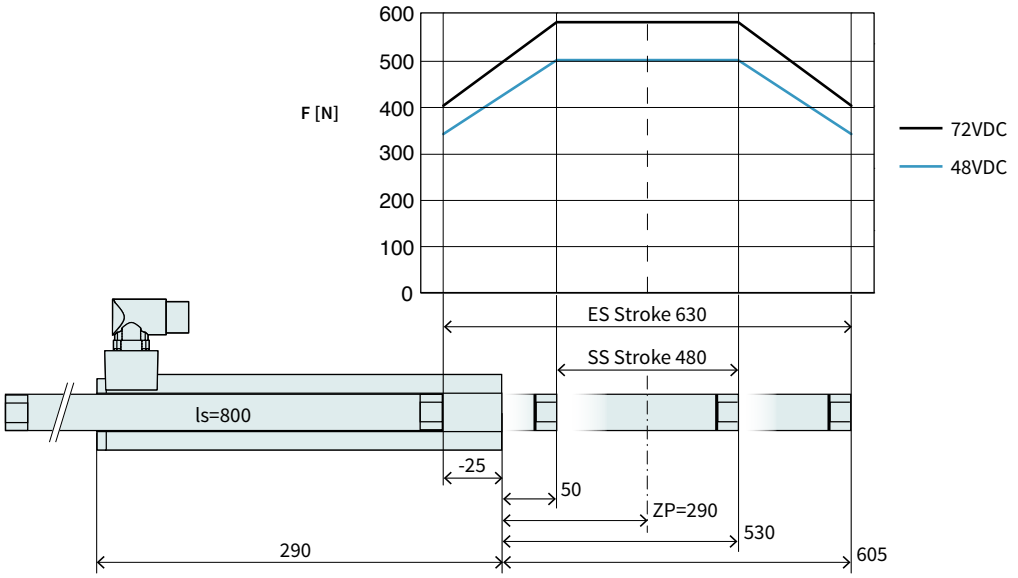

Dimensions in mm

Technical Data P01-48x240/480x630				
Stroke				
Standard Stroke (SS)	mm	(in)	480	(18.89)
Extended Stroke (ES)	mm	(in)	630	(24.8)
Force				
Max. Force @ 48VDC	N	(lbf)	497	(112)
Max. Force @ 72VDC	N	(lbf)	585	(132)
Max. Cont. Force [Passive cooling/ Fan / Fluid]	N	(lbf)	140 / 250 / -	(32 / 56 / -)
Max. Border Force relative	%		69	
Force Constant	N/A_{pk}	(lbf/A_{pk})	39	(8.77)
Velocity				
Max. Velocity @ 48VDC	m/s	(in/s)	1.1	(44.9)
Max. Velocity @ 72VDC	m/s	(in/s)	1.6	(66.9)
Position Detection				
Repeatability	mm	(in)	±0.05	(±0.002)
Linearity	%		± 0.2	
Electrical Data				
Max. Current @ 48VDC	A_{pk}		12.6	
Max. Current @ 72VDC	A_{pk}		14.9	
Max. Cont. Current [Passive cooling /Fan / Fluid]	A_{pk}		3.6 / 6.4 / -	
Thermal Data				
Max. Winding Temperature (Sensor)	°C		90	
Thermal Resistance [Passive cooling / Fan / Fluid]	°K/W		0.95 / 0.31 / -	
Thermal Time Constant [Passive cooling / Fan / Fluid]	s		970 / 320 / -	
Mechanical Data				
Slider Length	mm	(in)	800	(31)
Slider Mass	g	(lb)	3560	(7.83)

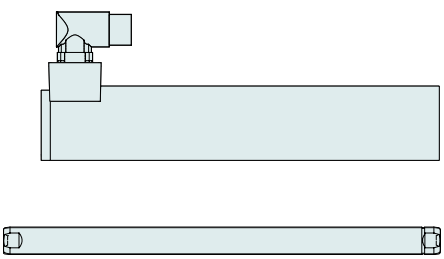

Item	Description	Item-No.
PS01-48x240-C	Stator with IP67 Connector M23/9(m)	0150-1219

PL01-28x800/720	Slider 'standard'	0150-1385
PL02-28x800/720	Slider 'heavy duty'	0150-1416
PL01-28x800/720-L*	Slider 'standard L'	0150-1483

* With this slider, the motor specifications above change.

P01-48x240/600x750

Max. Stroke: 750 mm
Peak Force: 585 N

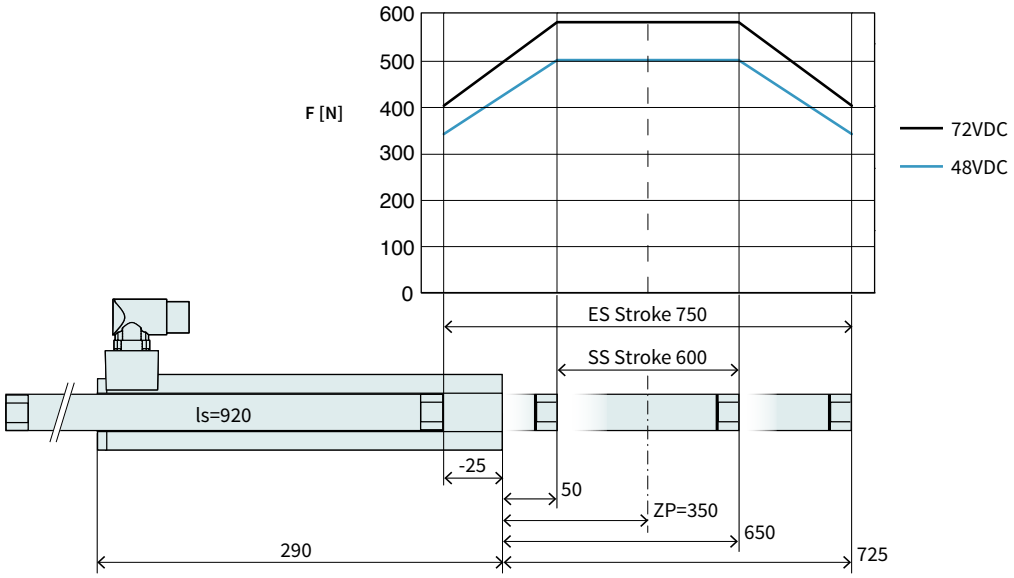

Dimensions in mm

Technical Data P01-48x240/600x750				
Stroke				
Standard Stroke (SS)	mm	(in)	600	(23.6)
Extended Stroke (ES)	mm	(in)	750	(29.49)
Force				
Max. Force @ 48VDC	N	(lbf)	497	(112)
Max. Force @ 72VDC	N	(lbf)	585	(132)
Max. Cont. Force [Passive cooling/ Fan / Fluid]	N	(lbf)	140 / 250 / -	(32 / 56 / -)
Max. Border Force relative	%		69	
Force Constant	N/A_{pk}	(lbf/A_{pk})	39	(8.77)
Velocity				
Max. Velocity @ 48VDC	m/s	(in/s)	1.1	(44.9)
Max. Velocity @ 72VDC	m/s	(in/s)	1.6	(66.9)
Position Detection				
Repeatability	mm	(in)	±0.05	(±0.002)
Linearity	%		± 0.2	
Electrical Data				
Max. Current @ 48VDC	A_{pk}		12.6	
Max. Current @ 72VDC	A_{pk}		14.9	
Max. Cont. Current [Passive cooling /Fan / Fluid]	A_{pk}		3.6 / 6.4 / -	
Thermal Data				
Max. Winding Temperature (Sensor)	°C		90	
Thermal Resistance [Passive cooling / Fan / Fluid]	°K/W		0.95 / 0.31 / -	
Thermal Time Constant [Passive cooling / Fan / Fluid]	s		970 / 320 / -	
Mechanical Data				
Slider Length	mm	(in)	920	(36)
Slider Mass	g	(lb)	4120	(9.06)

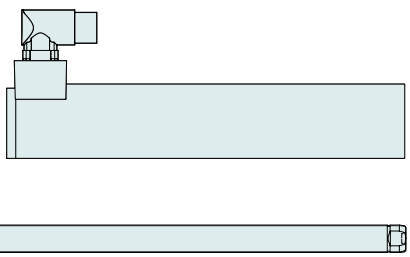

Item	Description	Item-No.
PS01-48x240-C	Stator with IP67 Connector M23/9(m)	0150-1219

PL01-28x920/840	Slider 'standard'	0150-1386
PL02-28x920/840	Slider 'heavy duty'	0150-1417
PL01-28x920/840-L*	Slider 'standard L'	0150-1484

* With this slider, the motor specifications above change.

P01-48x240/690x840

Max. Stroke: 840 mm
Peak Force: 585 N

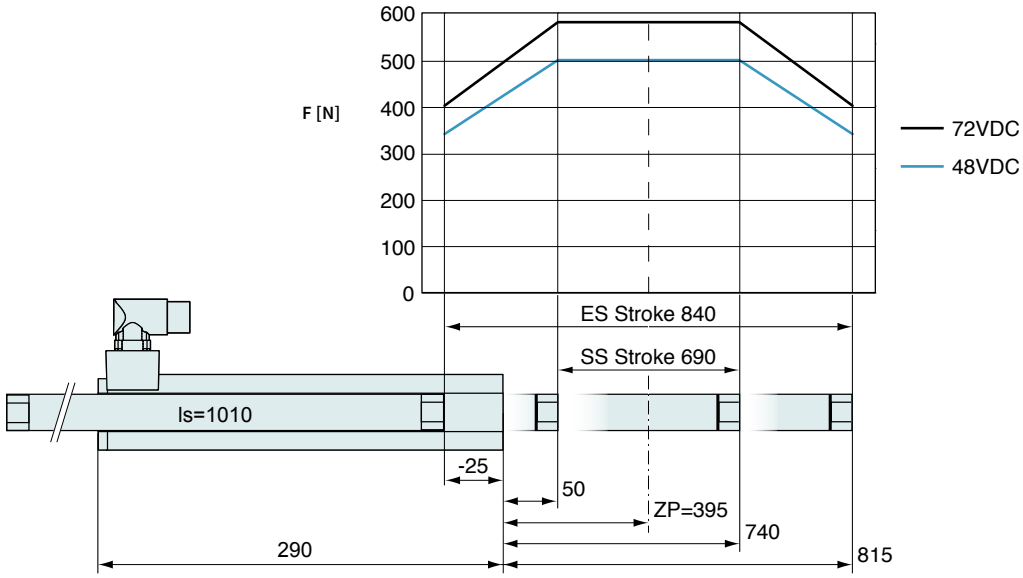

Dimensions in mm

Technical Data P01-48x240/690x840				
Stroke				
Standard Stroke (SS)	mm	(in)	690	(27.19)
Extended Stroke (ES)	mm	(in)	840	(33.1)
Force				
Max. Force @ 48VDC	N	(lbf)	497	(112)
Max. Force @ 72VDC	N	(lbf)	585	(132)
Max. Cont. Force [Passive cooling/ Fan / Fluid]	N	(lbf)	140 / 250 / -	(32 / 56 / -)
Max. Border Force relative	%		69	
Force Constant	N/A_{pk}	(lbf/A_{pk})	39	(8.77)
Velocity				
Max. Velocity @ 48VDC	m/s	(in/s)	1.1	(44.9)
Max. Velocity @ 72VDC	m/s	(in/s)	1.6	(66.9)
Position Detection				
Repeatability	mm	(in)	±0.05	(±0.002)
Linearity	%		± 0.2	
Electrical Data				
Max. Current @ 48VDC	A_{pk}		12.6	
Max. Current @ 72VDC	A_{pk}		14.9	
Max. Cont. Current [Passive cooling /Fan / Fluid]	A_{pk}		3.6 / 6.4 / -	
Thermal Data				
Max. Winding Temperature (Sensor)	°C		90	
Thermal Resistance [Passive cooling / Fan / Fluid]	°K/W		0.95 / 0.31 / -	
Thermal Time Constant [Passive cooling / Fan / Fluid]	s		970 / 320 / -	
Mechanical Data				
Slider Length	mm	(in)	1010	(40)
Slider Mass	g	(lb)	4540	(10)



Item	Description	Item-No.
PS01-48x240-C	Stator with IP67 Connector M23/9(m)	0150-1219
PL01-28x1010/930	Slider 'standard'	0150-1387

P01-48x240/900x1050

Max. Stroke: 1050 mm
Peak Force: 585 N

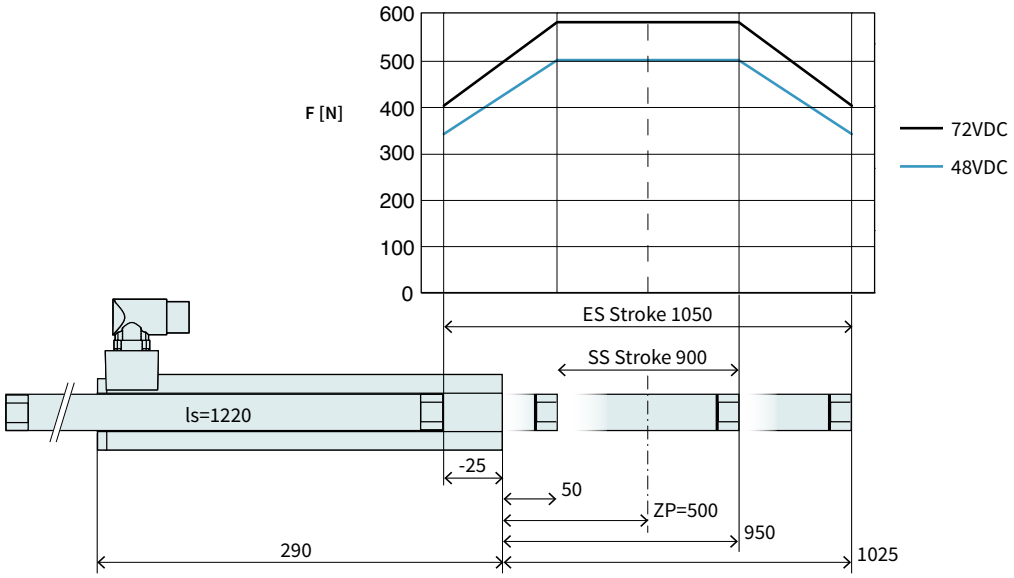

Dimensions in mm

Technical Data P01-48x240/900x1050				
Stroke				
Standard Stroke (SS)	mm	(in)	900	(35.39)
Extended Stroke (ES)	mm	(in)	1050	(41.29)
Force				
Max. Force @ 48VDC	N	(lbf)	497	(112)
Max. Force @ 72VDC	N	(lbf)	585	(132)
Max. Cont. Force [Passive cooling/ Fan / Fluid]	N	(lbf)	140 / 250 / -	(32 / 56 / -)
Max. Border Force relative	%		69	
Force Constant	N/A_{pk}	(lbf/A_{pk})	39	(8.77)
Velocity				
Max. Velocity @ 48VDC	m/s	(in/s)	1.1	(44.9)
Max. Velocity @ 72VDC	m/s	(in/s)	1.6	(66.9)
Position Detection				
Repeatability	mm	(in)	±0.05	(±0.002)
Linearity	%		± 0.15	
Electrical Data				
Max. Current @ 48VDC	A_{pk}		12.6	
Max. Current @ 72VDC	A_{pk}		14.9	
Max. Cont. Current [Passive cooling /Fan / Fluid]	A_{pk}		3.6 / 6.4 / -	
Thermal Data				
Max. Winding Temperature (Sensor)	°C		90	
Thermal Resistance [Passive cooling / Fan / Fluid]	°K/W		0.95 / 0.31 / -	
Thermal Time Constant [Passive cooling / Fan / Fluid]	s		970 / 320 / -	
Mechanical Data				
Slider Length	mm	(in)	1220	(48)
Slider Mass	g	(lb)	5510	(12.12)



Item	Description	Item-No.
PS01-48x240-C	Stator with IP67 Connector M23/9(m)	0150-1219
PL01-28x1220/1140	Slider 'standard'	0150-1388

P01-48x240/1080x1230

Max. Stroke: 1230 mm
Peak Force: 585 N

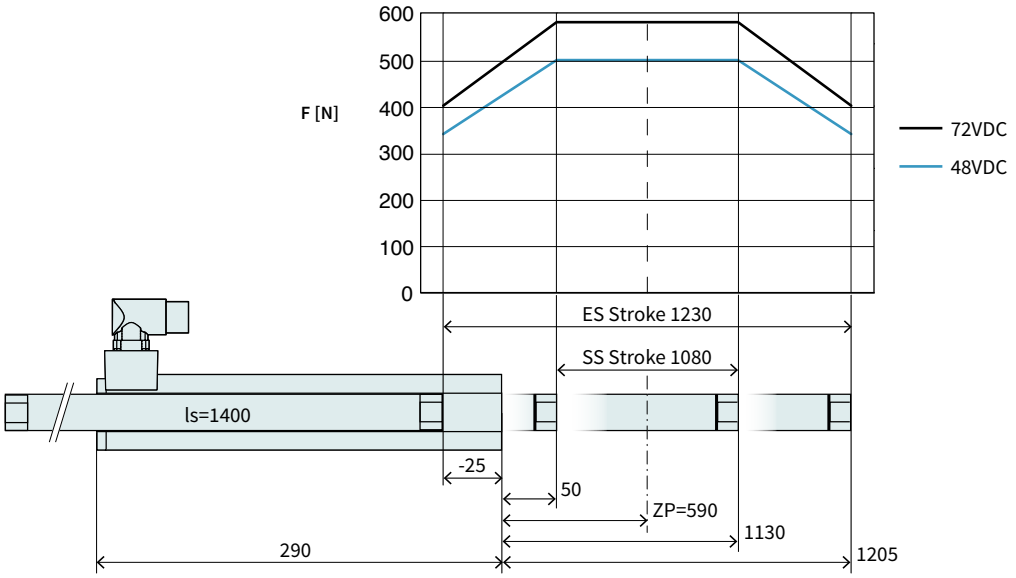

Dimensions in mm

Technical Data P01-48x240/1080x1230				
Stroke				
Standard Stroke (SS)	mm	(in)	1080	(42.49)
Extended Stroke (ES)	mm	(in)	1230	(48.39)
Force				
Max. Force @ 48VDC	N	(lbf)	497	(112)
Max. Force @ 72VDC	N	(lbf)	585	(132)
Max. Cont. Force [Passive cooling/ Fan / Fluid]	N	(lbf)	140 / 250 / -	(32 / 56 / -)
Max. Border Force relative	%		69	
Force Constant	N/A_{pk}	(lbf/A_{pk})	39	(8.77)
Velocity				
Max. Velocity @ 48VDC	m/s	(in/s)	1.1	(44.9)
Max. Velocity @ 72VDC	m/s	(in/s)	1.6	(66.9)
Position Detection				
Repeatability	mm	(in)	±0.05	(±0.002)
Linearity	%		± 0.15	
Electrical Data				
Max. Current @ 48VDC	A_{pk}		12.6	
Max. Current @ 72VDC	A_{pk}		14.9	
Max. Cont. Current [Passive cooling /Fan / Fluid]	A_{pk}		3.6 / 6.4 / -	
Thermal Data				
Max. Winding Temperature (Sensor)	°C		90	
Thermal Resistance [Passive cooling / Fan / Fluid]	°K/W		0.95 / 0.31 / -	
Thermal Time Constant [Passive cooling / Fan / Fluid]	s		970 / 320 / -	
Mechanical Data				
Slider Length	mm	(in)	1400	(55)
Slider Mass	g	(lb)	6350	(13.97)



Item	Description	Item-No.
PS01-48x240-C	Stator with IP67 Connector M23/9(m)	0150-1219
PL01-28x1400/1320	Slider 'standard'	0150-1389

P01-48x240/1290x1440

Max. Stroke: 1440 mm
Peak Force: 585 N

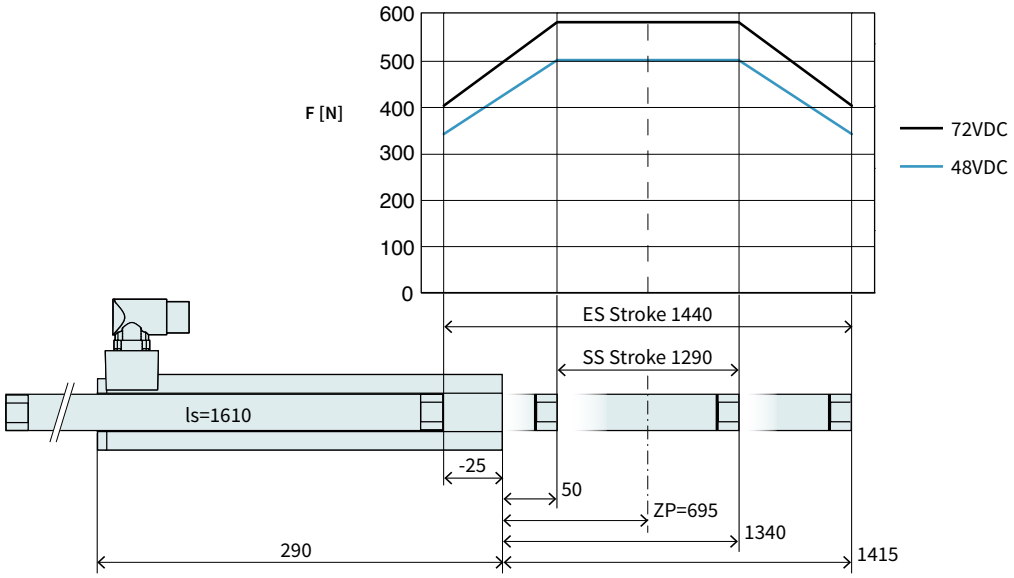

Dimensions in mm

Technical Data P01-48x240/1290x1440				
Stroke				
Standard Stroke (SS)	mm	(in)	1290	(50.79)
Extended Stroke (ES)	mm	(in)	1440	(56.7)
Force				
Max. Force @ 48VDC	N	(lbf)	497	(112)
Max. Force @ 72VDC	N	(lbf)	585	(132)
Max. Cont. Force [Passive cooling/ Fan / Fluid]	N	(lbf)	140 / 250 / -	(32 / 56 / -)
Max. Border Force relative	%		69	
Force Constant	N/A_{pk}	(lbf/A_{pk})	39	(8.77)
Velocity				
Max. Velocity @ 48VDC	m/s	(in/s)	1.1	(44.9)
Max. Velocity @ 72VDC	m/s	(in/s)	1.6	(66.9)
Position Detection				
Repeatability	mm	(in)	±0.05	(±0.002)
Linearity	%		± 0.15	
Electrical Data				
Max. Current @ 48VDC	A_{pk}		12.6	
Max. Current @ 72VDC	A_{pk}		14.9	
Max. Cont. Current [Passive cooling /Fan / Fluid]	A_{pk}		3.6 / 6.4 / -	
Thermal Data				
Max. Winding Temperature (Sensor)	°C		90	
Thermal Resistance [Passive cooling / Fan / Fluid]	°K/W		0.95 / 0.31 / -	
Thermal Time Constant [Passive cooling / Fan / Fluid]	s		970 / 320 / -	
Mechanical Data				
Slider Length	mm	(in)	1610	(63)
Slider Mass	g	(lb)	7330	(16.13)



Item	Description	Item-No.
PS01-48x240-C	Stator with IP67 Connector M23/9(m)	0150-1219
PL01-28x1610/1530	Slider 'standard'	0150-1390

P01-48x240/1500x1650

Max. Stroke: 1650 mm
Peak Force: 585 N

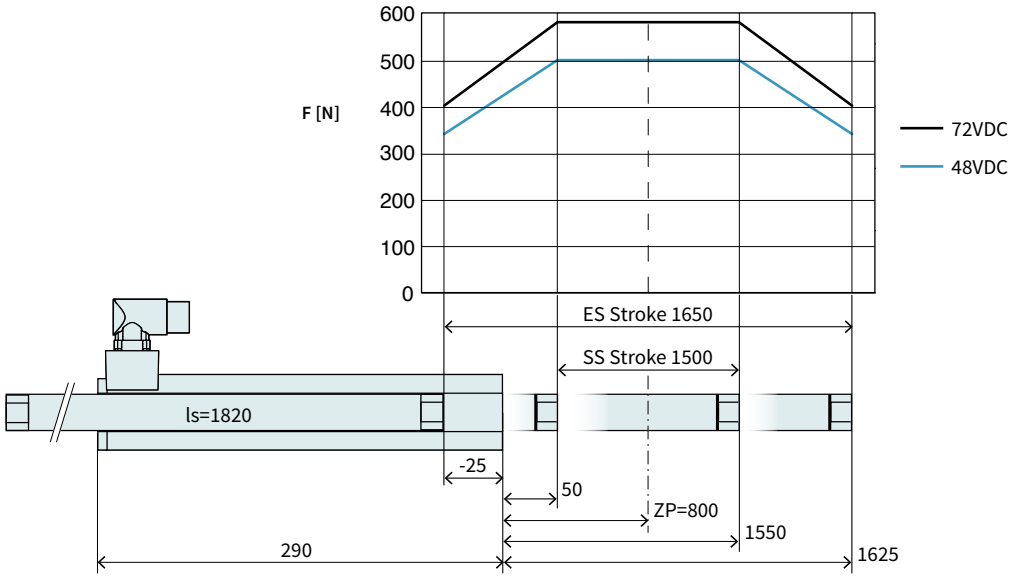

Dimensions in mm

Technical Data P01-48x240/1500x1650				
Stroke				
Standard Stroke (SS)	mm	(in)	1500	(59.1)
Extended Stroke (ES)	mm	(in)	1650	(64.99)
Force				
Max. Force @ 48VDC	N	(lbf)	497	(112)
Max. Force @ 72VDC	N	(lbf)	585	(132)
Max. Cont. Force [Passive cooling/ Fan / Fluid]	N	(lbf)	140 / 250 / -	(32 / 56 / -)
Max. Border Force relative	%		69	
Force Constant	N/A_{pk}	(lbf/A_{pk})	39	(8.77)
Velocity				
Max. Velocity @ 48VDC	m/s	(in/s)	1.1	(44.9)
Max. Velocity @ 72VDC	m/s	(in/s)	1.6	(66.9)
Position Detection				
Repeatability	mm	(in)	±0.05	(±0.002)
Linearity	%		± 0.15	
Electrical Data				
Max. Current @ 48VDC	A_{pk}		12.6	
Max. Current @ 72VDC	A_{pk}		14.9	
Max. Cont. Current [Passive cooling /Fan / Fluid]	A_{pk}		3.6 / 6.4 / -	
Thermal Data				
Max. Winding Temperature (Sensor)	°C		90	
Thermal Resistance [Passive cooling / Fan / Fluid]	°K/W		0.95 / 0.31 / -	
Thermal Time Constant [Passive cooling / Fan / Fluid]	s		970 / 320 / -	
Mechanical Data				
Slider Length	mm	(in)	1820	(72)
Slider Mass	g	(lb)	8300	(18.26)



Item	Description	Item-No.
PS01-48x240-C	Stator with IP67 Connector M23/9(m)	0150-1219
PL01-28x1820/1740	Slider 'standard'	0150-1395

P01-48x240/1680x1830

Max. Stroke: 1830 mm
Peak Force: 585 N

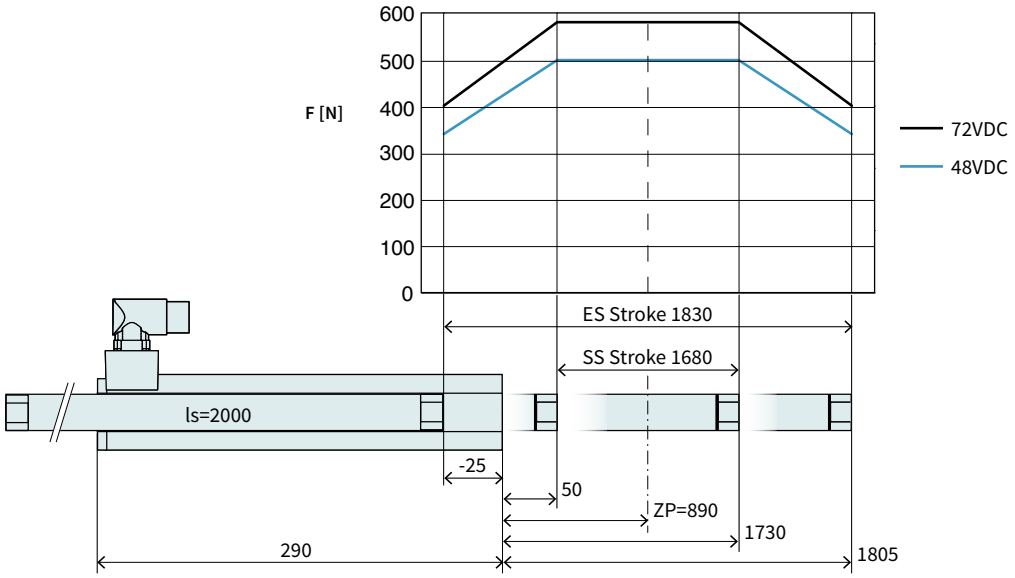

Dimensions in mm

Technical Data P01-48x240/1680x1830				
Stroke				
Standard Stroke (SS)	mm	(in)	1680	(66.09)
Extended Stroke (ES)	mm	(in)	1830	(71.99)
Force				
Max. Force @ 48VDC	N	(lbf)	497	(112)
Max. Force @ 72VDC	N	(lbf)	585	(132)
Max. Cont. Force [Passive cooling/ Fan / Fluid]	N	(lbf)	140 / 250 / -	(32 / 56 / -)
Max. Border Force relative	%		69	
Force Constant	N/A_{pk}	(lbf/A_{pk})	39	(8.77)
Velocity				
Max. Velocity @ 48VDC	m/s	(in/s)	1.1	(44.9)
Max. Velocity @ 72VDC	m/s	(in/s)	1.6	(66.9)
Position Detection				
Repeatability	mm	(in)	±0.05	(±0.002)
Linearity	%		± 0.15	
Electrical Data				
Max. Current @ 48VDC	A_{pk}		12.6	
Max. Current @ 72VDC	A_{pk}		14.9	
Max. Cont. Current [Passive cooling /Fan / Fluid]	A_{pk}		3.6 / 6.4 / -	
Thermal Data				
Max. Winding Temperature (Sensor)	°C		90	
Thermal Resistance [Passive cooling / Fan / Fluid]	°K/W		0.95 / 0.31 / -	
Thermal Time Constant [Passive cooling / Fan / Fluid]	s		970 / 320 / -	
Mechanical Data				
Slider Length	mm	(in)	2000	(79)
Slider Mass	g	(lb)	9140	(20.11)



Item	Description	Item-No.
PS01-48x240-C	Stator with IP67 Connector M23/9(m)	0150-1219
PL01-28x2000/1920	Slider 'standard'	0150-1396

Linear Guides H01



HM01-48x240/120	**Linear Module 48x240 with 120 mm Stroke**			
H-Guide	H01-48x250/120	H-Guide for P01-48x240, Stroke max 120mm	0150-5100
	H01-48x250/120-GF	H-Guide for P01-48x240, Stroke max 120mm	0150-5104
Stator	PS01-48x240-C	Linearmotor Stator, Connector C - IP67	0150-1219
Slider	PL01-28x410/330	Slider Standard for H01-48x250/120	0150-1381
HM01-48x240/210	**Linear Module 48x240 with 210 mm Stroke**		
H-Guide	H01-48x250/210	H-Guide for P01-48x240, Stroke max 210mm	0150-5101
	H01-48x250/210-GF	H-Guide for P01-48x240, Stroke max 210mm	0150-5105
Stator	PS01-48x240-C	Linearmotor Stator, Connector C - IP67	0150-1219
Slider	PL01-28x500/420	Slider Standard for H01-48x250/210	0150-1382
HM01-48x240/330	**Linear Module 48x240 with 330 mm Stroke**		
H-Guide	H01-48x250/330	H01 for P01-48x240, 330 mm Stroke, Kugelbüchsen	0150-5102
	H01-48x250/330-GF	H01 for P01-48x240, 330mm Stroke, Gleitlager	0150-5106
Stator	PS01-48x240-C	Linearmotor Stator, Connector C - IP67	0150-1219
Slider	PL01-28x620/540	Slider Standard for H01-48x250/330	0150-1383
HM01-48x240/420	**Linear Module 48x240 with 420 mm Stroke**		
H-Guide	H01-48x250/420	H-Guide for P01-48x240, Stroke max 420mm	0150-5103
	H01-48x250/420-GF	H-Guide for P01-48x240, Stroke max 420mm	0150-5107
Stator	PS01-48x240-C	Linearmotor Stator, Connector C - IP67	0150-1219
Slider	PL01-28x710/630	Slider Standard for H01-48x250/420	0150-1384
Accessories			
Brake	HB01-48	Pneumatic Brake for H01-48/1000N(4-6Bar)	0150-5098
Fan	HV01-37/48	Fan cooling for H01-37/48 &PF02-37/48	0150-5051
MagSpring	MF01-37/H37	Flange MagSpring 37 / H-Guide 23/37/48	0250-2307
	MA01-37/H48	Adapter MagSpring 37 / H-Guide 48	0250-0118
Sliding block	PFN01-8/M6	Sliding block 8mm, M6 thread	0250-3245
Centering sleeve	HC01-11/05	Centering sleeve D11x5 mm	0150-3252
Wipers	HA01-48/28-F	Wiper for H01-48 guides, front side	0150-5109

FIND MORE PRODUCT DETAILS IN THE CHAPTER "LINEAR GUIDES".

Bridge Guide B01



BM01-48x240/90	**Bridge Module 48x240 with 90 mm Stroke**			
B-Guide	B01-48x250/90	B-Guide for P01-48x240, Stroke max 90mm	0150-5150
	B01-48x250/90-GF	B-Guide for P01-48x240, Stroke max 90mm	0150-5154
Stator	PS01-48x240-C	Linearmotor Stator, Connector C - IP67	0150-1219
Slider	PL01-27x410/330	High Clearance Slider for B01-48x250/90	0150-1468
BM01-48x240/180	**Bridge Module 48x240 with 180 mm Stroke**			
B-Guide	B01-48x250/180	B-Guide for P01-48x240, Stroke max 180mm	0150-5151
	B01-48x250/180-GF	B-Guide for P01-48x240, Stroke max 180mm	0150-5155
Stator	PS01-48x240-C	Linearmotor Stator, Connector C - IP67	0150-1219
Slider	PL01-27x500/420	High Clearance Slider for B01-48x250/180	0150-1469
BM01-48x240/300	**Bridge Module 48x240 with 300 mm Stroke**			
B-Guide	B01-48x250/300	B-Guide for P01-48x240, Stroke max 300mm	0150-5152
	B01-48x250/300-GF	B-Guide for P01-48x240, Stroke max 300mm	0150-5156
Stator	PS01-37x240-C	Stator with IP67 Connector M23/9(m)	0150-1224
Slider	PL01-27x620/540	High Clearance Slider for B01-48x250/300	0150-1470
BM01-48x240/390	**Bridge Module 48x240 with 390 mm Stroke**			
B-Guide	B01-48x250/390	B-Guide for P01-48x240, Stroke max 390mm	0150-5153
	B01-48x250/390-GF	B-Guide for P01-48x240, Stroke max 390mm	0150-5157
Stator	PS01-37x240-C	Stator with IP67 Connector M23/9(m)	0150-1224
Slider	PL01-27x710/630	High Clearance Slider for B01-48x250/390	0150-1471
Accessories				
Brake	HB01-48	Pneumatic Brake for H01-48/1000N(4-6Bar)	0150-5098
Fan	HV01-37/48	Fan for H01-37 and -48 H-Guideen	0150-5051
MagSpring	MF01-37/H37	Flange MagSpring 37 / H-Guide 23/37/48	0250-2307
	MA01-37/H48	Adapter MagSpring 37 / H-Guide 48	0250-0118
Sliding block	PFN01-8/M6	Sliding block 8mm, M6 thread	0250-3245
Centering sleeve	HC01-11/05	Centering sleeve D11x5 mm	0150-3252
Wipers	HA01-48/27-F	Wiper for H01-48 guides, front side	0150-5178

FIND MORE PRODUCT DETAILS IN THE CHAPTER "LINEAR GUIDES".

Motor Cable

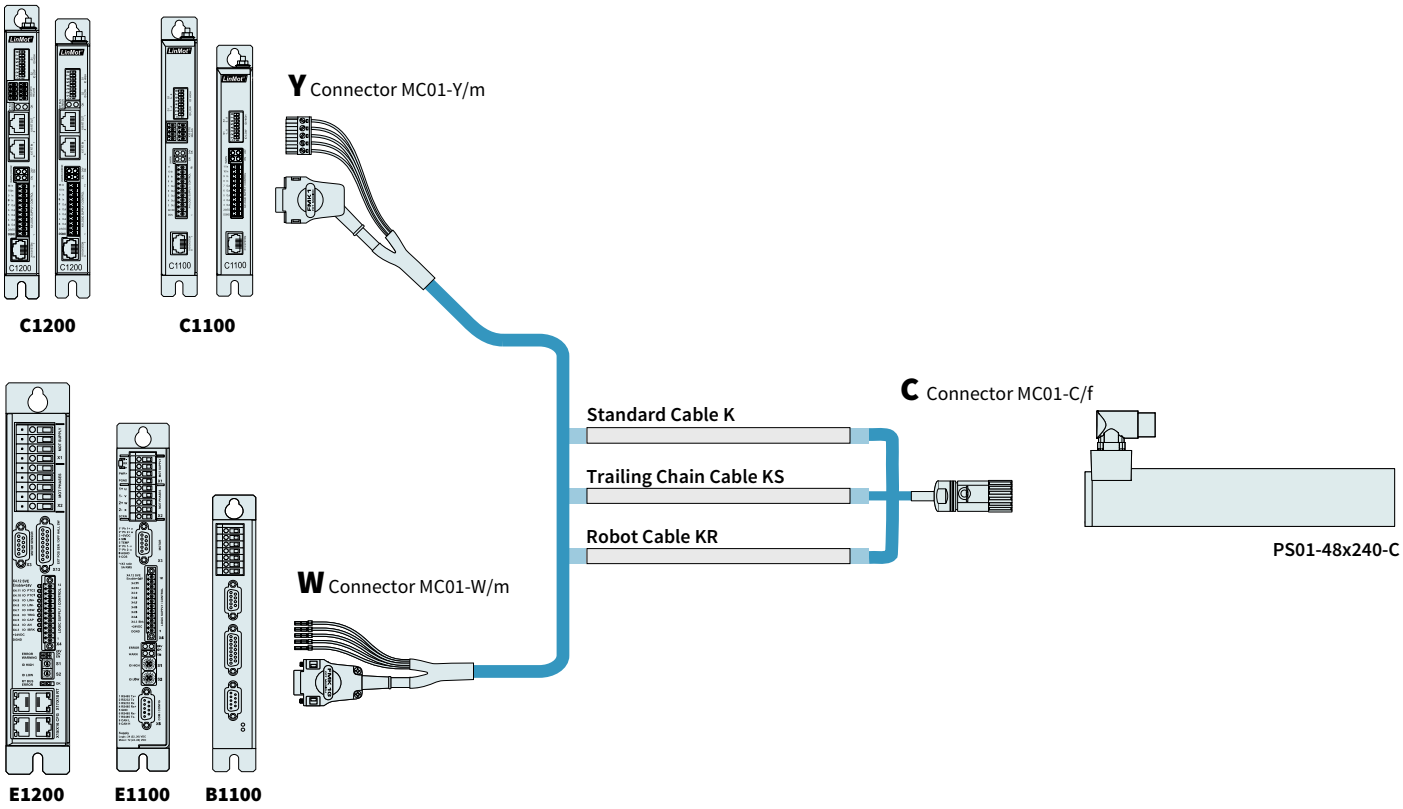

ORDERING INFORMATION

STANDARD CABLE		
Item	**Description**	**Item-No.**
K15-W/C-2	Motor Cable W/C, 2 m	0150-1811
K15-W/C-4	Motor Cable W/C, 4 m	0150-1801
K15-W/C-6	Motor Cable W/C, 6 m	0150-1802
K15-W/C-8	Motor Cable W/C, 8 m	0150-1803
K15-W/C-	Motor Cable W/C, Custom length	0150-3131
K15-Y/C-2	Motor Cable Y/R, 2 m	0150-2429
K15-Y/C-4	Motor Cable Y/R, 4 m	0150-2430
K15-Y/C-6	Motor Cable Y/R, 6 m	0150-2431
K15-Y/C-8	Motor Cable Y/R, 8 m	0150-2432
K15-Y-Fe/C-	Motor Cable Y-Fe/R, Custom length	0150-3506

TRAILING CHAIN CABLE		
Item	**Description**	**Item-No.**
KS10-W/C-4	Trailing Chain Cable W/C, 4 m	0150-1807
KS10-W/C-6	Trailing Chain Cable W/C, 6 m	0150-1858
KS10-W/C-8	Trailing Chain Cable W/C, 8 m	0150-1808
KS10-W/C-	Trailing Chain Cable W/C, Custom length	0150-3139
KS10-Y/C-4	Trailing Chain Cable Y/C, 4 m	0150-2439
KS10-Y/C-6	Trailing Chain Cable Y/C, 6 m	0150-2440
KS10-Y/C-8	Trailing Chain Cable Y/C, 8 m	0150-2441
KS10-Y/C-	Trailing Chain Cable Y-Fe/C, Custom length	0150-3511

ROBOT CABLE		
Item	**Description**	**Item-No.**
KR10-W/C-	Robot Cable KR10-W/C, Custom length	0150-3199
KR10-Y-Fe/C-	Robot Cable KR10-Y-Fe/C, Custom length	0150-3515

CONNECTOR & CABLE (INDIVIDUAL)		
Item	**Description**	**Item-No.**
MC01-W/m	Motor Connector W/m	0150-3140
MC01-Y-Fe/m	Motor Connector Y-Fe/m	0150-3289
MC01-C/f	Motor Connector C/f	0150-3080
MC01-P/f	Motor Connector P/f	0150-3021
K15-04/05	Motor Cable per m	0150-1978
KS10-04/05	Trailing Chain Cable per m	0150-1977
KR10-04/05	Robot Cable per m	0150-1830

MOTOR FLANGES



Item	Description	Item-No.
PF01-48x120	Flange 48x120 mm	0150-1976
PF01-48x226	Flange 48x226 mm	0150-2108

FIND MORE PRODUCT DETAILS IN THE CHAPTER "ACCESSORIES".

FANS



Item	Description	Item-No.
HV01-37/48	Fan cooling for H01-37, B01-37 and PF02-37	0150-5051

FIND MORE PRODUCT DETAILS IN THE CHAPTER "ACCESSORIES".

SLIDER MOUNTING



Item	Description	Item-No.
PLF01-28	Fixed Bearing Set for 27/28 mm sliders	0150-3087
PLF01-28-SS	Fixed Bearing Set for 27/28 mm sliders, stainless steel	0150-3297
PLL01-27	Floating Bearing for 27 mm sliders	0150-3294
PLL01-28	Floating Bearing for 28 mm sliders	0150-3094
PLM01-28-MK	Mounting Kit for PL01-28 Slider	0150-3095

FIND MORE PRODUCT DETAILS IN THE CHAPTER "ACCESSORIES".

WIPERS



Item	Description	Item-No.
PA01-48/27-F	Wiper front side for PS01-48x...	0150-3228
PA01-48/27-R	Wiper back side for PS01-48x...-C	0150-3229
PA01-48/28-F	Wiper front side for PS01-48x...	0150-3127
PA01-48/28-R	Wiper back side for PS01-48x...-C	0150-3202

FIND MORE PRODUCT DETAILS IN THE CHAPTER "ACCESSORIES".

EXTERNAL POSITION SENSORS



Item	Description	Item-No.
MS01-1/D	Linear Encoder 1µm, A/B (for inc. strip)	0150-1840
MB01-1000	Magnetic incremental strip for MS01-1/D, per cm	0150-1963
KS025-D/D-Encoder	Encoder Cable (Length in m)	0150-3166
KS025-D/D15-Encoder	Encoder Cable (Length in m)	0150-3168

FIND MORE PRODUCT DETAILS IN THE CHAPTER "ACCESSORIES".



Item	Description	Item-No.
MS01-1/D-SSI	Linear Encoder 1µm, A/B (for absolute strip)	0150-2095
MB01-1000-ABS	Magnetic absolute strip for MS01-1/D-SSI (per cm)	0150-2096
EC01-ABS/ENC-12-S	MS01-1/D-SSI Encoder connector straight	0150-3616
KSS01-12-D15/ABS-ENC	Special cable for MS01-1/D-SSI on C1100/C1200/C1400/E1200/E1400 Drives	0150-3652

FIND MORE PRODUCT DETAILS IN THE CHAPTER "ACCESSORIES".

LINEAR MOTORS P01-48x240F



- Highly dynamic drives
- With a special F-winding for a higher maximum speed
- Wide stroke range
- Available with rotatable connector
- Optional with air cooling
- Wide range of applications in handling modules as well as in plant and machine construction

3

LINEAR MOTORS P01-48x240F

Technical Data **345**

Motor Specifications

P01-48x240F/30x180 ..... **349**

P01-48x240F/90x240 ..... **350**

P01-48x240F/180x330 ..... **351**

P01-48x240F/300x450 ..... **352**

P01-48x240F/390x540 ..... **353**

P01-48x240F/480x630 ..... **354**

P01-48x240F/600x750 ..... **355**

P01-48x240F/690x840 ..... **356**

P01-48x240F/900x1050 ..... **357**

P01-48x240F/1080x1230 ..... **358**

P01-48x240F/1290x1440 ..... **359**

P01-48x240F/1500x1650 ..... **360**

P01-48x240F/1680x1830 ..... **361**

Linear Guides **362**

Accessories **364**



MOTOR FAMILY P01-48x240F

Technical Data				
Stroke				
Standard Stroke (SS)	mm	(in)	≤ 1680	(≤ 66.1)
Extended Stroke (ES)	mm	(in)	≤ 1830	(≤ 72)
Force				
Max. Force @ 48VDC	N	(lbf)	572	(129)
Max. Force @ 72VDC	N	(lbf)	572	(129)
Max. Cont. Force [Passive cooling/ Fan / Fluid]	N	(lbf)	140 / 240 / -	(32 / 55 / -)
Max. Border Force relative	%		≤ 69	
Force Constant	N/A_{pk}	(lbf/A_{pk})	22	(4.95)
Velocity				
Max. Velocity @ 48VDC	m/s	(in/s)	1.9	(78.9)
Max. Velocity @ 72VDC	m/s	(in/s)	2.9	(119.9)
Position Detection				
Position Resolution	mm	(in)	0.007	(0.0003)
Repeatability	mm	(in)	±0.05	(±0.002)
Position Resolution with ES	mm	(in)	0.001	(0.00004)
Repeatability with ES	mm	(in)	±0.01	(±0.0004)
Linearity with ES	mm	(in)	±0.01	(±0.0004)
Electrical Data				
Max. Current @ 48VDC	A_{pk}		25.9	
Max. Current @ 72VDC	A_{pk}		25.9	
Max. Cont. Current [Passive cooling /Fan / Fluid]	A_{pk}		6.5 / 11 / -	
Terminal Resistance 25 °C / 120 °C	Ohm		0.97 / 1.3	
Terminal Inductivity	mH		1.1	
Magnetic Period	mm	(in)	60	(2.35)
Thermal Data				
Max. Winding Temperature (Sensor)	°C		90	
Thermal Resistance [Passive cooling / Fan / Fluid]	°K/W		0.95 / 0.32 / -	
Thermal Time Constant [Passive cooling / Fan / Fluid]	s		970 / 330 / -	
Mechanical Data				
Stator Diameter	mm	(in)	48	(1.9)
Stator Length [Connector type / Cable type]	mm	(in)	289.5	(11)
Stator Mass	g	(lb)	1930	(4.25)
Slider Diameter	mm	(in)	28	(1.1)
Slider Length	mm	(in)	350 - 2000	(14 - 79)
Slider Mass	g	(lb)	1460 - 9140	(3.21 - 20.1)
IP Code			IP 65	

STATOR

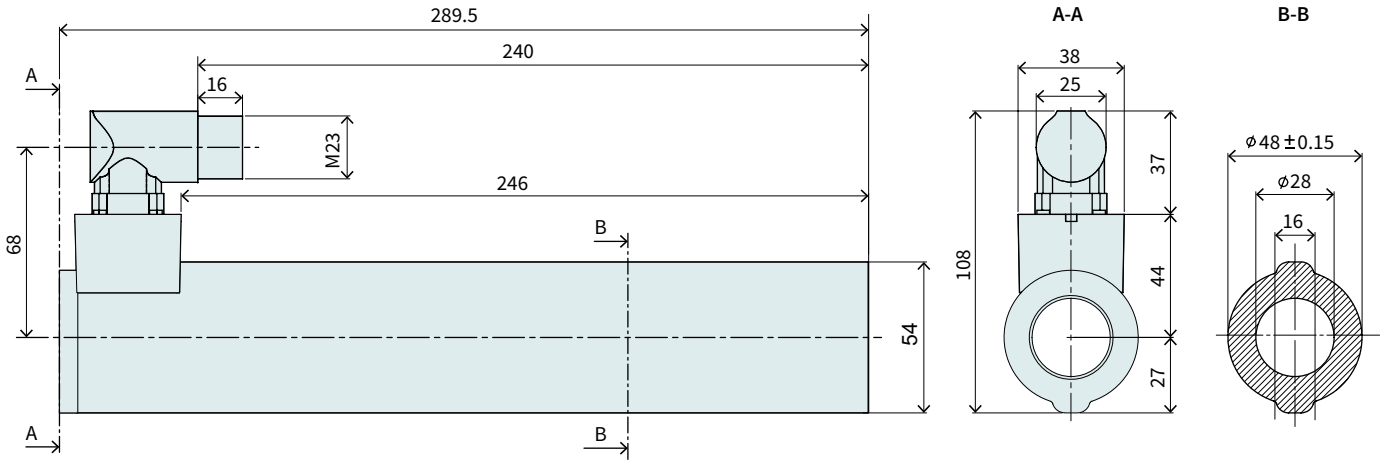

Item	Description	Item-No.
PS01-48x240F-C	Stator with IP67 Connector M23/9(m)	0150-1220

CONNECTOR

Motor Connector Wiring	PS01-37x240-C PS01-37x240-C20	Wire color motor cable
	C-Connector	
Ph 1+	A	red
Ph 1-	B	pink
Ph 2+	C	blue
Ph 2-	D	grey
+5VDC	E	white
GND	F	inner shield
Sin	G	yellow
Cos	H	green
Temp.	L	black
Shield	Housing	outer Shield

C-Connector

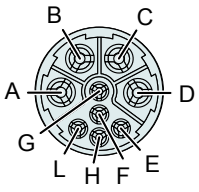

View: Motor Connector, plug side

SLIDER

Slider Standard / Heavy Duty

Number of grooves determines the slider type
(see chapter 2 / slider) and marks the front end.

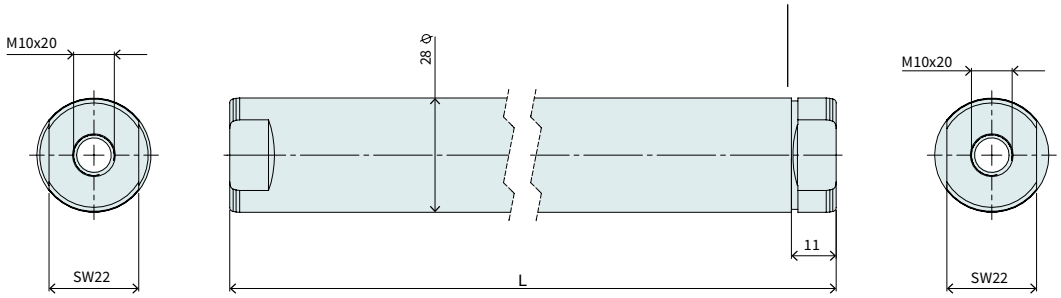

Hollow slider

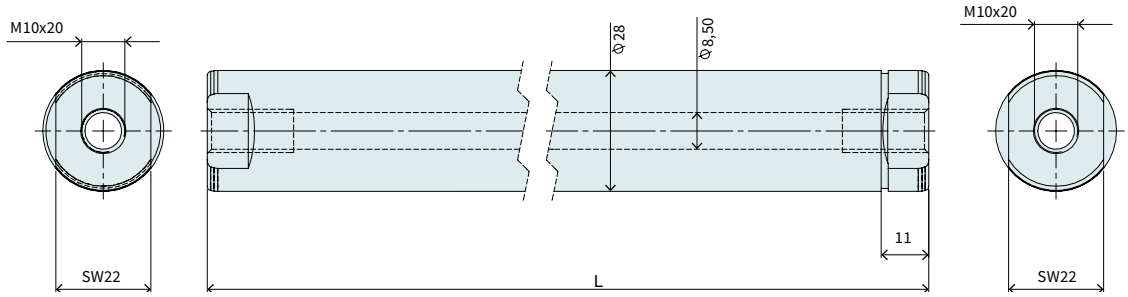

High-Clearance Slider

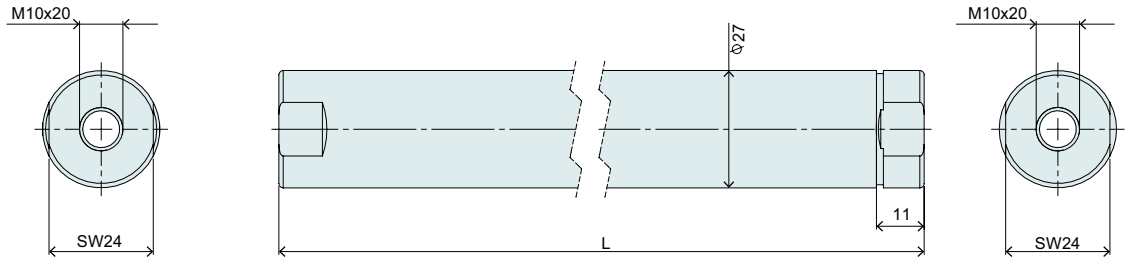

Slider Standard				
Item	Description	Max. Stroke [mm]	Standard Stroke [mm]	Item-No.
PL01-28x350/270	Slider 'standard'	180	30	0150-1380
PL01-28x410/330	Slider 'standard'	240	90	0150-1381
PL01-28x500/420	Slider 'standard'	330	180	0150-1382
PL01-28x620/540	Slider 'standard'	450	300	0150-1383
PL01-28x710/630	Slider 'standard'	540	390	0150-1384
PL01-28x800/720	Slider 'standard'	630	480	0150-1385
PL01-28x920/840	Slider 'standard'	750	600	0150-1386
PL01-28x1010/930	Slider 'standard'	840	690	0150-1387
PL01-28x1220/1140	Slider 'standard'	1050	900	0150-1388
PL01-28x1400/1320	Slider 'standard'	1230	1080	0150-1389
PL01-28x1610/1530	Slider 'standard'	1440	1290	0150-1390
PL01-28x1820/1740	Slider 'standard'	1650	1500	0150-1395
PL01-28x2000/1920	Slider 'standard'	1830	1680	0150-1396

Slider Heavy Duty				
Item	Description	Max. Stroke [mm]	Standard Stroke [mm]	Item-No.
PL02-28x350/270	Slider 'heavy duty'	180	30	0150-1411
PL02-28x410/330	Slider 'heavy duty'	240	90	0150-1412
PL02-28x500/420	Slider 'heavy duty'	330	180	0150-1413
PL02-28x620/540	Slider 'heavy duty'	450	300	0150-1414
PL02-28x710/630	Slider 'heavy duty'	540	390	0150-1415
PL02-28x800/720	Slider 'heavy duty'	630	480	0150-1416
PL02-28x920/840	Slider 'heavy duty'	750	600	0150-1417

Hollow slider				
Item	Description	Max. Stroke [mm]	Standard Stroke [mm]	Item-No.
PL01-28x350/270	Slider 'standard L'	180	30	0150-1475
PL01-28x410/330	Slider 'standard L'	240	90	0150-1476
PL01-28x500/420	Slider 'standard L'	330	180	0150-1480
PL01-28x620/540	Slider 'standard L'	450	300	0150-1481
PL01-28x710/630	Slider 'standard L'	540	390	0150-1482
PL01-28x800/720	Slider 'standard L'	630	480	0150-1483
PL01-28x920/840	Slider 'standard L'	750	600	0150-1484

High-Clearance Slider				
Item	Description	Max. Stroke [mm]	Standard Stroke [mm]	Item-No.
PL01-27x350/270	Slider 'high clearance'	180	30	0150-1467
PL01-27x410/330	Slider 'high clearance'	240	90	0150-1468
PL01-27x500/420	Slider 'high clearance'	330	180	0150-1469
PL01-27x620/540	Slider 'high clearance'	450	300	0150-1470
PL01-27x710/630	Slider 'high clearance'	540	390	0150-1471

P01-48x240F/30x180

Max. Stroke: 180 mm
Peak Force: 572 N

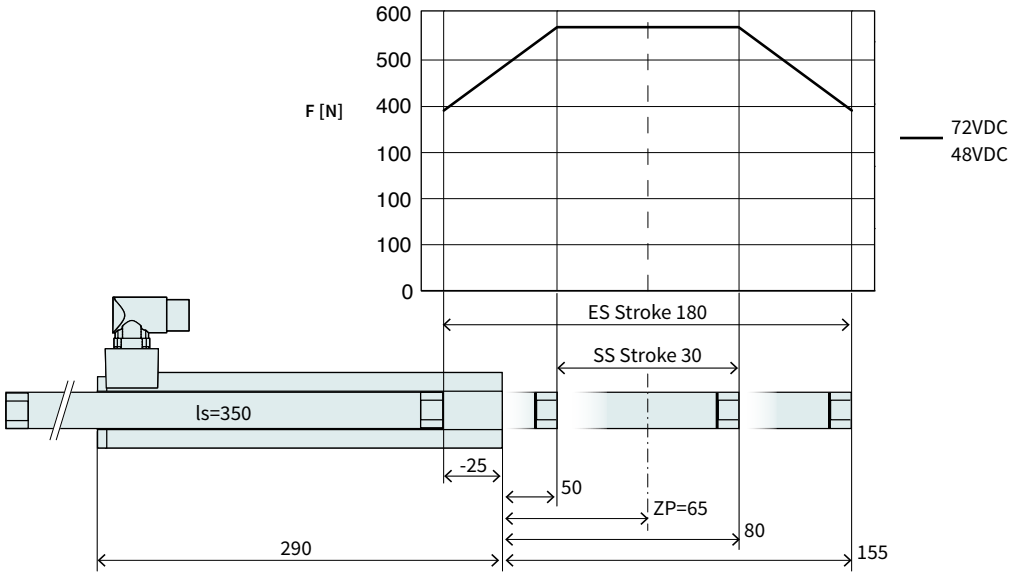

Dimensions in mm

Technical Data P01-48x240F/30x180				
Stroke				
Standard Stroke (SS)	mm	(in)	30	(1.17)
Extended Stroke (ES)	mm	(in)	180	(7.08)
Force				
Max. Force @ 48VDC	N	(lbf)	572	(129)
Max. Force @ 72VDC	N	(lbf)	572	(129)
Max. Cont. Force [Passive cooling/ Fan / Fluid]	N	(lbf)	140 / 240 / -	(32 / 55 / -)
Max. Border Force relative	%		69	
Force Constant	N/A_{pk}	(lbf/A_{pk})	22	(4.95)
Velocity				
Max. Velocity @ 48VDC	m/s	(in/s)	1.9	(78.9)
Max. Velocity @ 72VDC	m/s	(in/s)	2.9	(119.9)
Position Detection				
Repeatability	mm	(in)	±0.05	(±0.002)
Linearity	%		± 0.5	
Electrical Data				
Max. Current @ 48VDC	A_{pk}		25.9	
Max. Current @ 72VDC	A_{pk}		25.9	
Max. Cont. Current [Passive cooling /Fan / Fluid]	A_{pk}		6.5 / 11 / -	
Thermal Data				
Max. Winding Temperature (Sensor)	°C		90	
Thermal Resistance [Passive cooling / Fan / Fluid]	°K/W		0.95 / 0.32 / -	
Thermal Time Constant [Passive cooling / Fan / Fluid]	s		970 / 330 / -	
Mechanical Data				
Slider Length	mm	(in)	350	(14)
Slider Mass	g	(lb)	1460	(3.21)

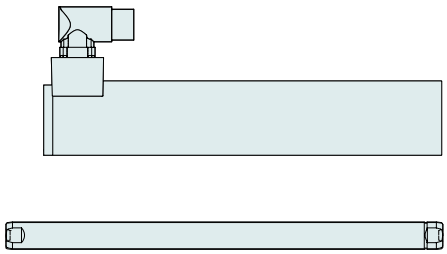

Item	Description	Item-No.
PS01-48x240F-C	Stator with IP67 Connector M23/9(m)	0150-1220

PL01-28x350/270	Slider 'standard'	0150-1380
PL02-28x350/270	Slider 'heavy duty'	0150-1411
PL01-28x350/270-L*	Slider 'standard L'	0150-1475
PL01-27x350/270*	Slider 'high clearance'	0150-1467

* With this slider, the motor specifications above change.

P01-48x240F/90x240

Max. Stroke: 240 mm
Peak Force: 572 N

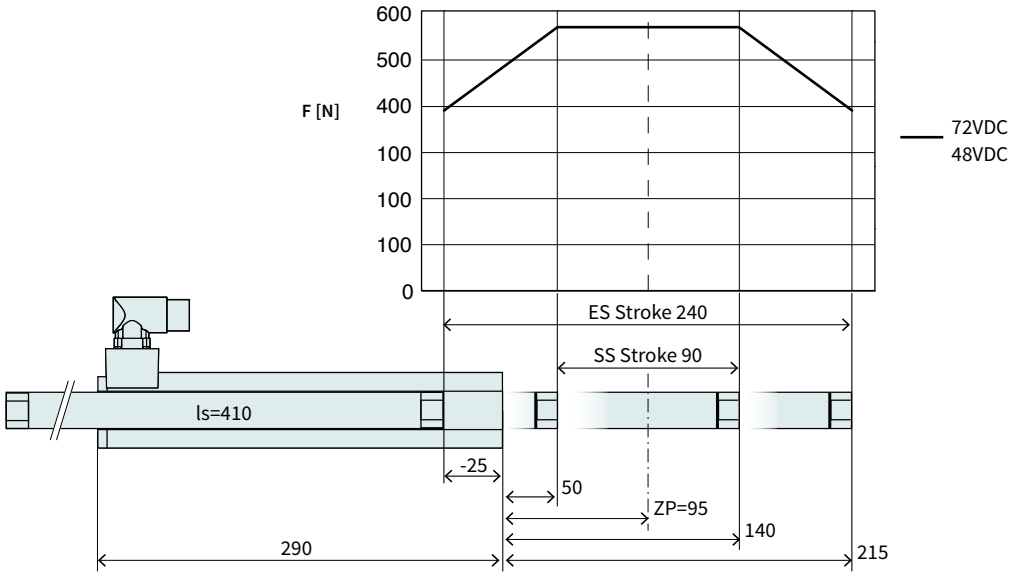

Dimensions in mm

Technical Data P01-48x240F/90x240				
Stroke				
Standard Stroke (SS)	mm	(in)	90	(3.53)
Extended Stroke (ES)	mm	(in)	240	(9.44)
Force				
Max. Force @ 48VDC	N	(lbf)	572	(129)
Max. Force @ 72VDC	N	(lbf)	572	(129)
Max. Cont. Force [Passive cooling/ Fan / Fluid]	N	(lbf)	140 / 240 / -	(32 / 55 / -)
Max. Border Force relative	%		69	
Force Constant	N/A_{pk}	(lbf/A_{pk})	22	(4.95)
Velocity				
Max. Velocity @ 48VDC	m/s	(in/s)	1.9	(78.9)
Max. Velocity @ 72VDC	m/s	(in/s)	2.9	(119.9)
Position Detection				
Repeatability	mm	(in)	±0.05	(±0.002)
Linearity	%		± 0.4	
Electrical Data				
Max. Current @ 48VDC	A_{pk}		25.9	
Max. Current @ 72VDC	A_{pk}		25.9	
Max. Cont. Current [Passive cooling /Fan / Fluid]	A_{pk}		6.5 / 11 / -	
Thermal Data				
Max. Winding Temperature (Sensor)	°C		90	
Thermal Resistance [Passive cooling / Fan / Fluid]	°K/W		0.95 / 0.32 / -	
Thermal Time Constant [Passive cooling / Fan / Fluid]	s		970 / 330 / -	
Mechanical Data				
Slider Length	mm	(in)	410	(16)
Slider Mass	g	(lb)	1740	(3.83)





Item	Description	Item-No.
PS01-48x240F-C	Stator with IP67 Connector M23/9(m)	0150-1220

PL01-28x410/330	Slider 'standard'	0150-1381
PL02-28x410/330	Slider 'heavy duty'	0150-1412
PL01-28x410/330-L*	Slider 'standard L'	0150-1476
PL01-27x410/330*	Slider 'high clearance'	0150-1468

* With this slider, the motor specifications above change.

P01-48x240F/180x330

Max. Stroke: 330 mm
Peak Force: 572 N

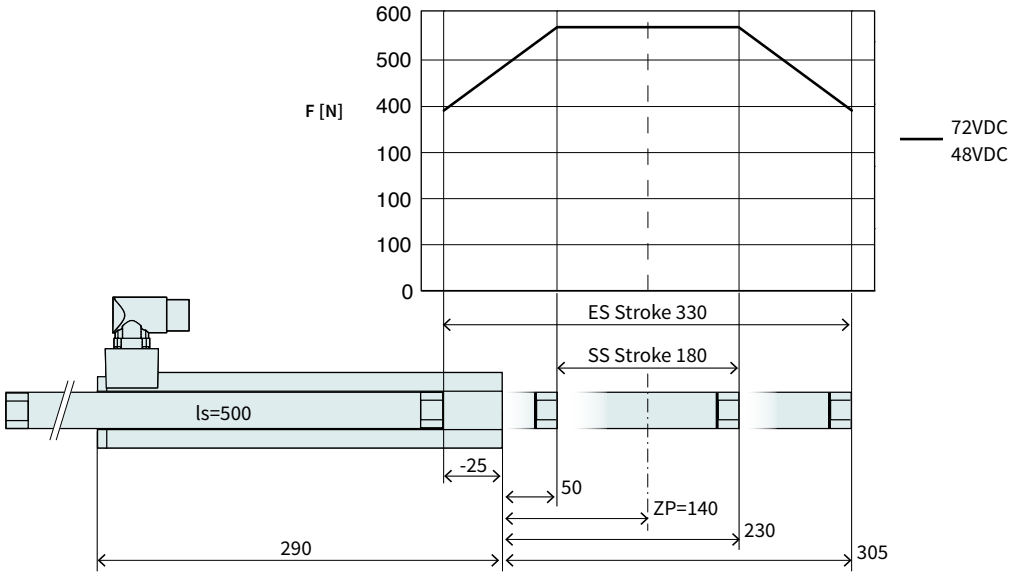

Dimensions in mm

Technical Data P01-48x240F/180x330				
Stroke				
Standard Stroke (SS)	mm	(in)	180	(7.08)
Extended Stroke (ES)	mm	(in)	330	(12.99)
Force				
Max. Force @ 48VDC	N	(lbf)	572	(129)
Max. Force @ 72VDC	N	(lbf)	572	(129)
Max. Cont. Force [Passive cooling/ Fan / Fluid]	N	(lbf)	140 / 240 / -	(32 / 55 / -)
Max. Border Force relative	%		69	
Force Constant	N/A_{pk}	(lbf/A_{pk})	22	(4.95)
Velocity				
Max. Velocity @ 48VDC	m/s	(in/s)	1.9	(78.9)
Max. Velocity @ 72VDC	m/s	(in/s)	2.9	(119.9)
Position Detection				
Repeatability	mm	(in)	±0.05	(±0.002)
Linearity	%		± 0.35	
Electrical Data				
Max. Current @ 48VDC	A_{pk}		25.9	
Max. Current @ 72VDC	A_{pk}		25.9	
Max. Cont. Current [Passive cooling /Fan / Fluid]	A_{pk}		6.5 / 11 / -	
Thermal Data				
Max. Winding Temperature (Sensor)	°C		90	
Thermal Resistance [Passive cooling / Fan / Fluid]	°K/W		0.95 / 0.32 / -	
Thermal Time Constant [Passive cooling / Fan / Fluid]	s		970 / 330 / -	
Mechanical Data				
Slider Length	mm	(in)	500	(20)
Slider Mass	g	(lb)	2160	(4.75)

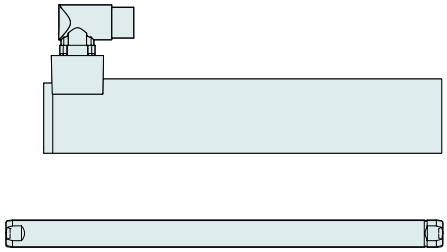

Item	Description	Item-No.
PS01-48x240F-C	Stator with IP67 Connector M23/9(m)	0150-1220

PL01-28x500/420	Slider 'standard'	0150-1382
PL02-28x500/420	Slider 'heavy duty'	0150-1413
PL01-28x500/420-L*	Slider 'standard L'	0150-1480
PL01-27x500/420*	Slider 'high clearance'	0150-1469

* With this slider, the motor specifications above change.

P01-48x240F/300x450

Max. Stroke: 450 mm
Peak Force: 572 N

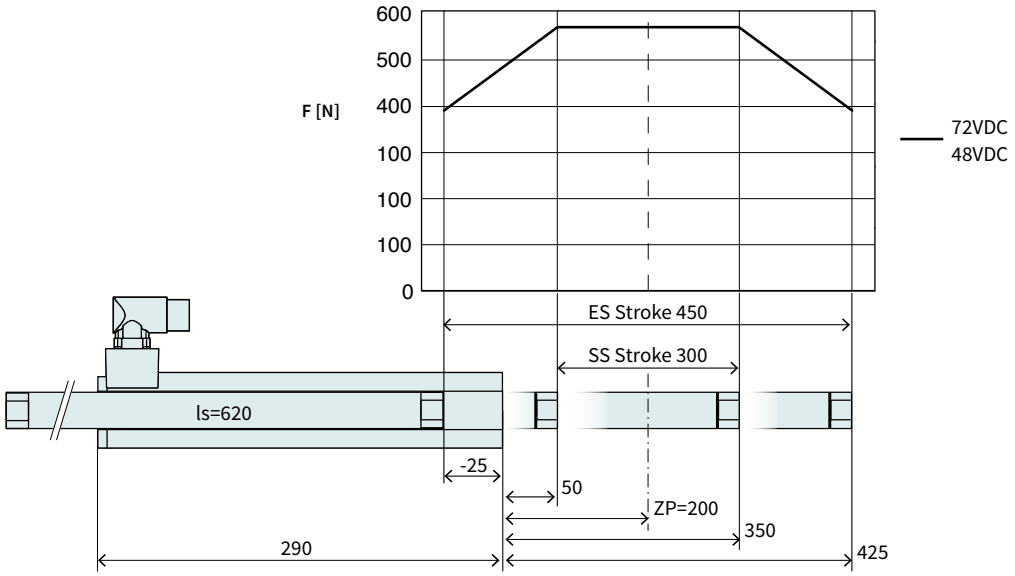

Dimensions in mm

Technical Data P01-48x240F/300x450				
Stroke				
Standard Stroke (SS)	mm	(in)	300	(11.8)
Extended Stroke (ES)	mm	(in)	450	(17.69)
Force				
Max. Force @ 48VDC	N	(lbf)	572	(129)
Max. Force @ 72VDC	N	(lbf)	572	(129)
Max. Cont. Force [Passive cooling/ Fan / Fluid]	N	(lbf)	140 / 240 / -	(32 / 55 / -)
Max. Border Force relative	%		69	
Force Constant	N/A_{pk}	(lbf/A_{pk})	22	(4.95)
Velocity				
Max. Velocity @ 48VDC	m/s	(in/s)	1.9	(78.9)
Max. Velocity @ 72VDC	m/s	(in/s)	2.9	(119.9)
Position Detection				
Repeatability	mm	(in)	±0.05	(±0.002)
Linearity	%		± 0.25	
Electrical Data				
Max. Current @ 48VDC	A_{pk}		25.9	
Max. Current @ 72VDC	A_{pk}		25.9	
Max. Cont. Current [Passive cooling /Fan / Fluid]	A_{pk}		6.5 / 11 / -	
Thermal Data				
Max. Winding Temperature (Sensor)	°C		90	
Thermal Resistance [Passive cooling / Fan / Fluid]	°K/W		0.95 / 0.32 / -	
Thermal Time Constant [Passive cooling / Fan / Fluid]	s		970 / 330 / -	
Mechanical Data				
Slider Length	mm	(in)	620	(24)
Slider Mass	g	(lb)	2720	(5.98)





Item	Description	Item-No.
PS01-48x240F-C	Stator with IP67 Connector M23/9(m)	0150-1220

PL01-28x620/540	Slider 'standard'	0150-1383
PL02-28x620/540	Slider 'heavy duty'	0150-1414
PL01-28x620/540-L*	Slider 'standard L'	0150-1481
PL01-27x620/540*	Slider 'high clearance'	0150-1470

* With this slider, the motor specifications above change.

P01-48x240F/390x540

Max. Stroke: 540 mm
Peak Force: 572 N

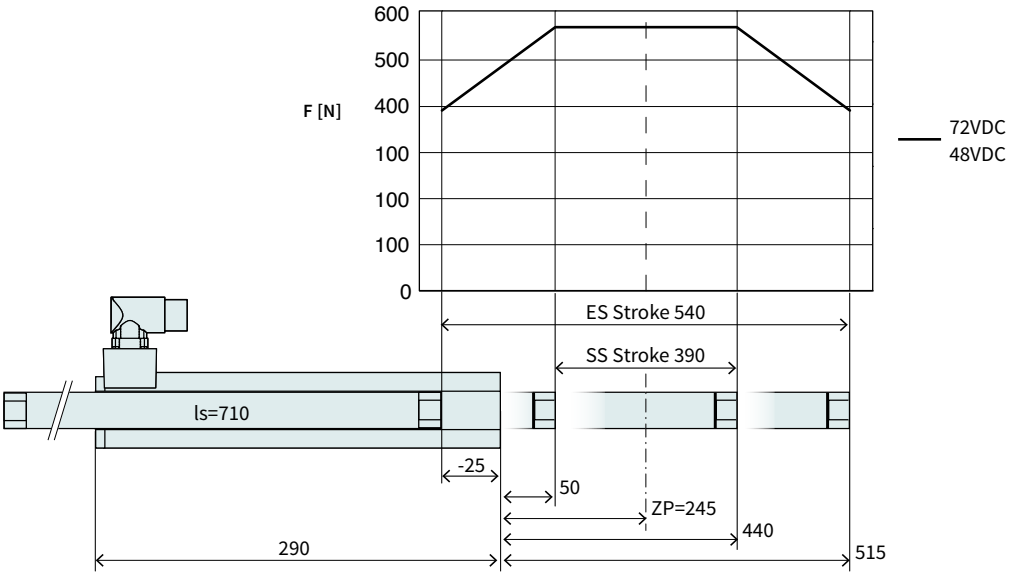

Dimensions in mm

Technical Data P01-48x240F/390x540				
Stroke				
Standard Stroke (SS)	mm	(in)	390	(15.4)
Extended Stroke (ES)	mm	(in)	540	(21.3)
Force				
Max. Force @ 48VDC	N	(lbf)	572	(129)
Max. Force @ 72VDC	N	(lbf)	572	(129)
Max. Cont. Force [Passive cooling/ Fan / Fluid]	N	(lbf)	140 / 240 / -	(32 / 55 / -)
Max. Border Force relative	%		69	
Force Constant	N/A_{pk}	(lbf/A_{pk})	22	(4.95)
Velocity				
Max. Velocity @ 48VDC	m/s	(in/s)	1.9	(78.9)
Max. Velocity @ 72VDC	m/s	(in/s)	2.9	(119.9)
Position Detection				
Repeatability	mm	(in)	±0.05	(±0.002)
Linearity	%		± 0.25	
Electrical Data				
Max. Current @ 48VDC	A_{pk}		25.9	
Max. Current @ 72VDC	A_{pk}		25.9	
Max. Cont. Current [Passive cooling /Fan / Fluid]	A_{pk}		6.5 / 11 / -	
Thermal Data				
Max. Winding Temperature (Sensor)	°C		90	
Thermal Resistance [Passive cooling / Fan / Fluid]	°K/W		0.95 / 0.32 / -	
Thermal Time Constant [Passive cooling / Fan / Fluid]	s		970 / 330 / -	
Mechanical Data				
Slider Length	mm	(in)	710	(28)
Slider Mass	g	(lb)	3140	(6.91)

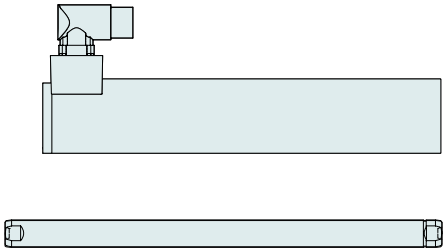

Item	Description	Item-No.
PS01-48x240F-C	Stator with IP67 Connector M23/9(m)	0150-1220

PL01-28x710/630	Slider 'standard'	0150-1384
PL02-28x710/630	Slider 'heavy duty'	0150-1415
PL01-28x710/630-L*	Slider 'standard L'	0150-1482
PL01-27x710/630*	Slider 'high clearance'	0150-1471

* With this slider, the motor specifications above change.

P01-48x240F/480x630

Max. Stroke: 630 mm
Peak Force: 572 N

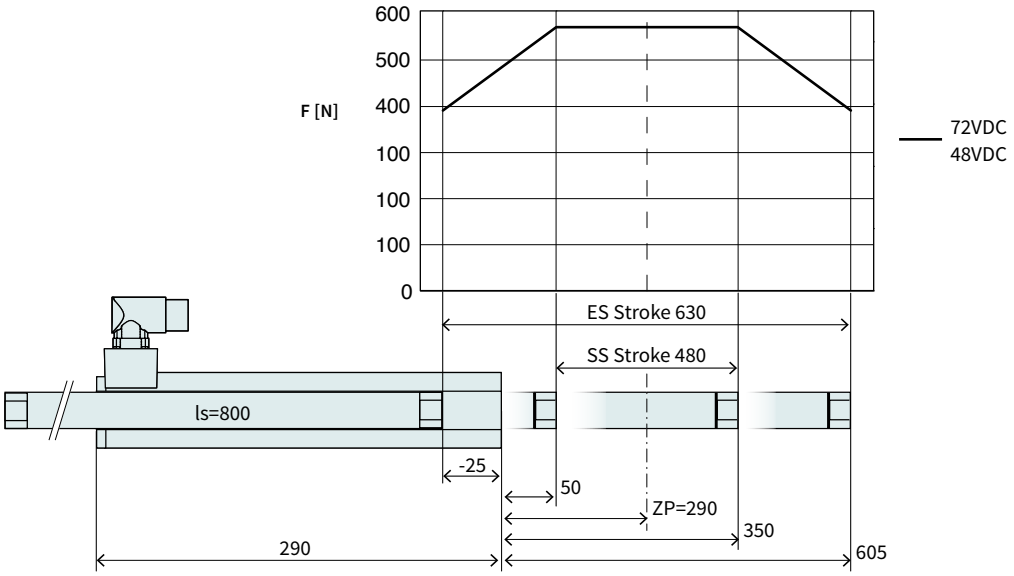

Dimensions in mm

Technical Data P01-48x240F/480x630				
Stroke				
Standard Stroke (SS)	mm	(in)	480	(18.89)
Extended Stroke (ES)	mm	(in)	630	(24.8)
Force				
Max. Force @ 48VDC	N	(lbf)	572	(129)
Max. Force @ 72VDC	N	(lbf)	572	(129)
Max. Cont. Force [Passive cooling/ Fan / Fluid]	N	(lbf)	140 / 240 / -	(32 / 55 / -)
Max. Border Force relative	%		69	
Force Constant	N/A_{pk}	(lbf/A_{pk})	22	(4.95)
Velocity				
Max. Velocity @ 48VDC	m/s	(in/s)	1.9	(78.9)
Max. Velocity @ 72VDC	m/s	(in/s)	2.9	(119.9)
Position Detection				
Repeatability	mm	(in)	±0.05	(±0.002)
Linearity	%		± 0.2	
Electrical Data				
Max. Current @ 48VDC	A_{pk}		25.9	
Max. Current @ 72VDC	A_{pk}		25.9	
Max. Cont. Current [Passive cooling /Fan / Fluid]	A_{pk}		6.5 / 11 / -	
Thermal Data				
Max. Winding Temperature (Sensor)	°C		90	
Thermal Resistance [Passive cooling / Fan / Fluid]	°K/W		0.95 / 0.32 / -	
Thermal Time Constant [Passive cooling / Fan / Fluid]	s		970 / 330 / -	
Mechanical Data				
Slider Length	mm	(in)	800	(31)
Slider Mass	g	(lb)	3560	(7.83)

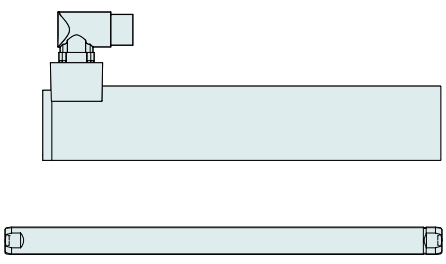

Item	Description	Item-No.
PS01-48x240F-C	Stator with IP67 Connector M23/9(m)	0150-1220

PL01-28x800/720	Slider 'standard'	0150-1385
PL02-28x800/720	Slider 'heavy duty'	0150-1416
PL01-28x800/720-L*	Slider 'standard L'	0150-1483

* With this slider, the motor specifications above change.

P01-48x240F/600x750

Max. Stroke: 750 mm
Peak Force: 572 N

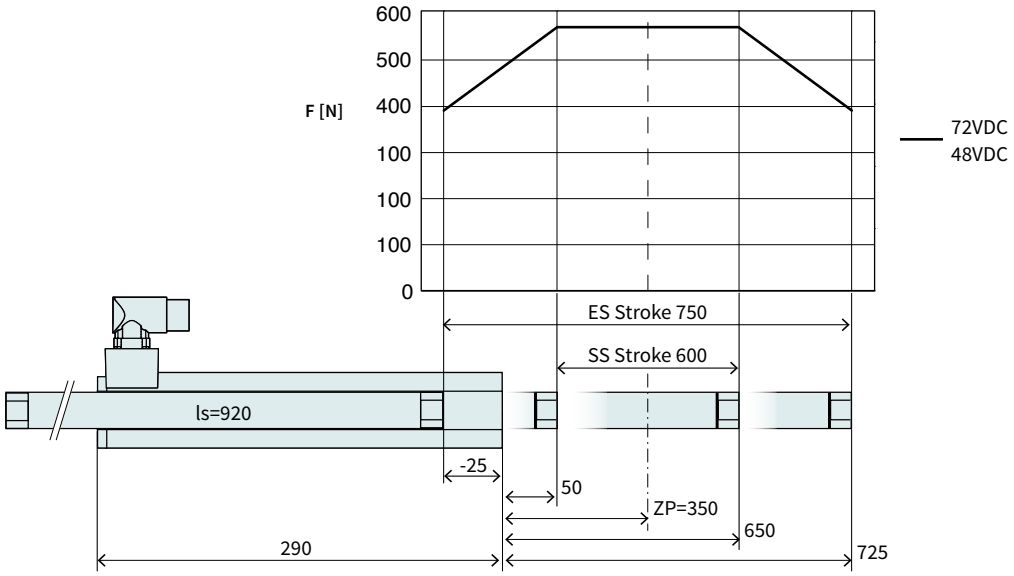

Dimensions in mm

Technical Data P01-48x240F/600x750				
Stroke				
Standard Stroke (SS)	mm	(in)	600	(23.6)
Extended Stroke (ES)	mm	(in)	750	(29.49)
Force				
Max. Force @ 48VDC	N	(lbf)	572	(129)
Max. Force @ 72VDC	N	(lbf)	572	(129)
Max. Cont. Force [Passive cooling/ Fan / Fluid]	N	(lbf)	140 / 240 / -	(32 / 55 / -)
Max. Border Force relative	%		69	
Force Constant	N/A_{pk}	(lbf/A_{pk})	22	(4.95)
Velocity				
Max. Velocity @ 48VDC	m/s	(in/s)	1.9	(78.9)
Max. Velocity @ 72VDC	m/s	(in/s)	2.9	(119.9)
Position Detection				
Repeatability	mm	(in)	±0.05	(±0.002)
Linearity	%		± 0.2	
Electrical Data				
Max. Current @ 48VDC	A_{pk}		25.9	
Max. Current @ 72VDC	A_{pk}		25.9	
Max. Cont. Current [Passive cooling /Fan / Fluid]	A_{pk}		6.5 / 11 / -	
Thermal Data				
Max. Winding Temperature (Sensor)	°C		90	
Thermal Resistance [Passive cooling / Fan / Fluid]	°K/W		0.95 / 0.32 / -	
Thermal Time Constant [Passive cooling / Fan / Fluid]	s		970 / 330 / -	
Mechanical Data				
Slider Length	mm	(in)	920	(36)
Slider Mass	g	(lb)	4120	(9.06)

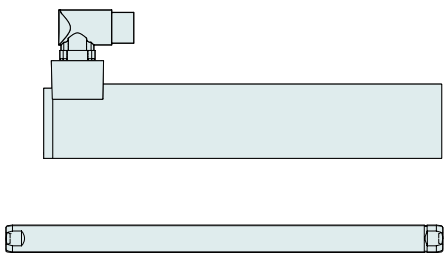

Item	Description	Item-No.
PS01-48x240F-C	Stator with IP67 Connector M23/9(m)	0150-1220

PL01-28x920/840	Slider 'standard'	0150-1386
PL02-28x920/840	Slider 'heavy duty'	0150-1417
PL01-28x920/840-L*	Slider 'standard L'	0150-1484

* With this slider, the motor specifications above change.

P01-48x240F/690x840

Max. Stroke: 840 mm
Peak Force: 572 N

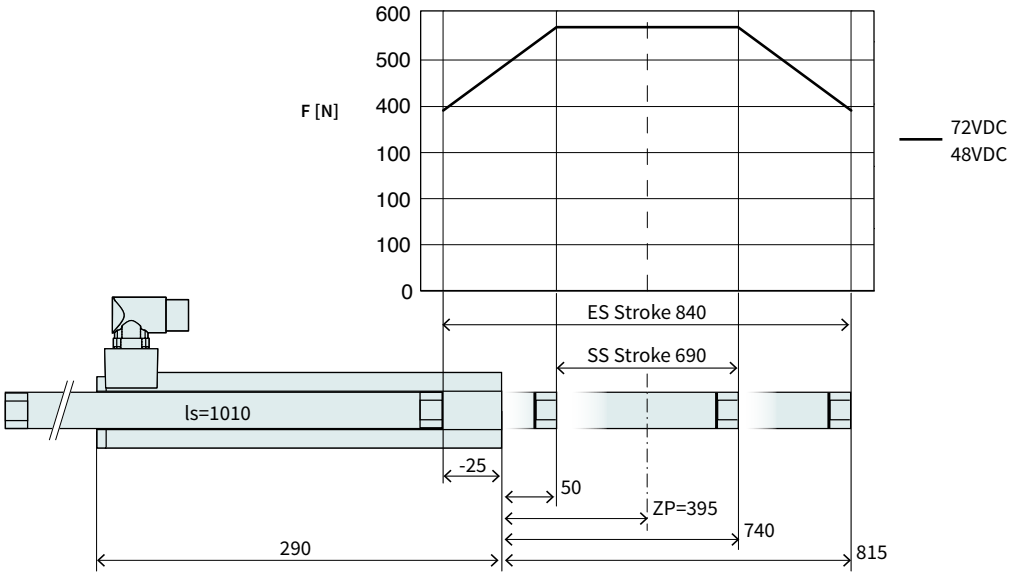

Dimensions in mm

Technical Data P01-48x240F/690x840				
Stroke				
Standard Stroke (SS)	mm	(in)	690	(27.19)
Extended Stroke (ES)	mm	(in)	840	(33.1)
Force				
Max. Force @ 48VDC	N	(lbf)	572	(129)
Max. Force @ 72VDC	N	(lbf)	572	(129)
Max. Cont. Force [Passive cooling/ Fan / Fluid]	N	(lbf)	140 / 240 / -	(32 / 55 / -)
Max. Border Force relative	%		69	
Force Constant	N/A_{pk}	(lbf/A_{pk})	22	(4.95)
Velocity				
Max. Velocity @ 48VDC	m/s	(in/s)	1.9	(78.9)
Max. Velocity @ 72VDC	m/s	(in/s)	2.9	(119.9)
Position Detection				
Repeatability	mm	(in)	±0.05	(±0.002)
Linearity	%		± 0.2	
Electrical Data				
Max. Current @ 48VDC	A_{pk}		25.9	
Max. Current @ 72VDC	A_{pk}		25.9	
Max. Cont. Current [Passive cooling /Fan / Fluid]	A_{pk}		6.5 / 11 / -	
Thermal Data				
Max. Winding Temperature (Sensor)	°C		90	
Thermal Resistance [Passive cooling / Fan / Fluid]	°K/W		0.95 / 0.32 / -	
Thermal Time Constant [Passive cooling / Fan / Fluid]	s		970 / 330 / -	
Mechanical Data				
Slider Length	mm	(in)	1010	(40)
Slider Mass	g	(lb)	4540	(10)



Item	Description	Item-No.
PS01-48x240F-C	ator with IP67 Connector M23/9(m)	0150-1220
PL01-28x1010/930	Slider 'standard'	0150-1387

P01-48x240F/900x1050

Max. Stroke: 1050 mm
Peak Force: 572 N

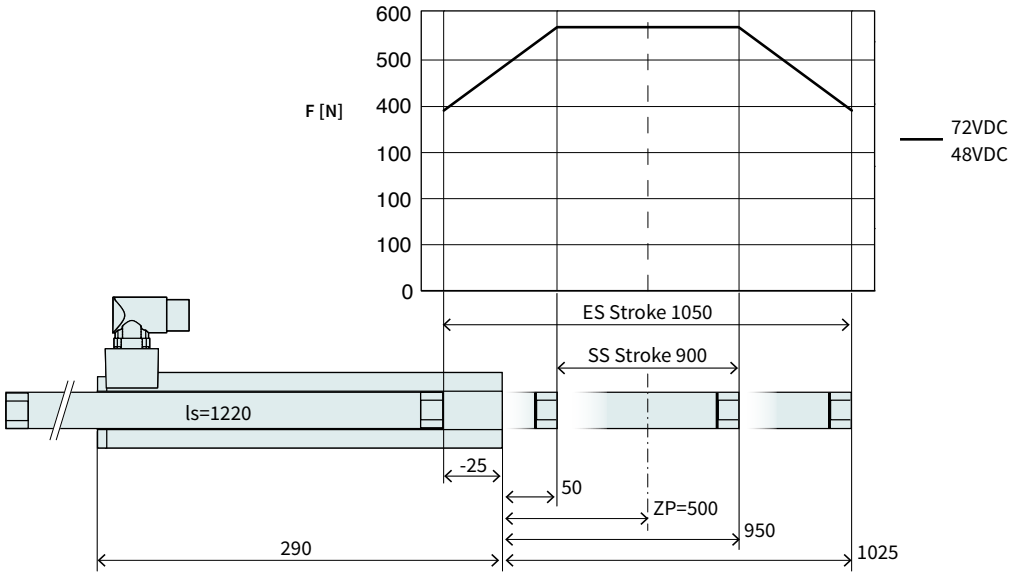

Dimensions in mm

Technical Data P01-48x240F/900x1050				
Stroke				
Standard Stroke (SS)	mm	(in)	900	(35.39)
Extended Stroke (ES)	mm	(in)	1050	(41.29)
Force				
Max. Force @ 48VDC	N	(lbf)	572	(129)
Max. Force @ 72VDC	N	(lbf)	572	(129)
Max. Cont. Force [Passive cooling/ Fan / Fluid]	N	(lbf)	140 / 240 / -	(32 / 55 / -)
Max. Border Force relative	%		69	
Force Constant	N/A_{pk}	(lbf/A_{pk})	22	(4.95)
Velocity				
Max. Velocity @ 48VDC	m/s	(in/s)	1.9	(78.9)
Max. Velocity @ 72VDC	m/s	(in/s)	2.9	(119.9)
Position Detection				
Repeatability	mm	(in)	±0.05	(±0.002)
Linearity	%		± 0.15	
Electrical Data				
Max. Current @ 48VDC	A_{pk}		25.9	
Max. Current @ 72VDC	A_{pk}		25.9	
Max. Cont. Current [Passive cooling /Fan / Fluid]	A_{pk}		6.5 / 11 / -	
Thermal Data				
Max. Winding Temperature (Sensor)	°C		90	
Thermal Resistance [Passive cooling / Fan / Fluid]	°K/W		0.95 / 0.32 / -	
Thermal Time Constant [Passive cooling / Fan / Fluid]	s		970 / 330 / -	
Mechanical Data				
Slider Length	mm	(in)	1220	(48)
Slider Mass	g	(lb)	5510	(12.12)



Item	Description	Item-No.
PS01-48x240F-C	Stator with IP67 Connector M23/9(m)	0150-1220
PL01-28x1220/1140	Slider 'standard'	0150-1388

P01-48x240F/1080x1230

Max. Stroke: 1230 mm
Peak Force: 572 N

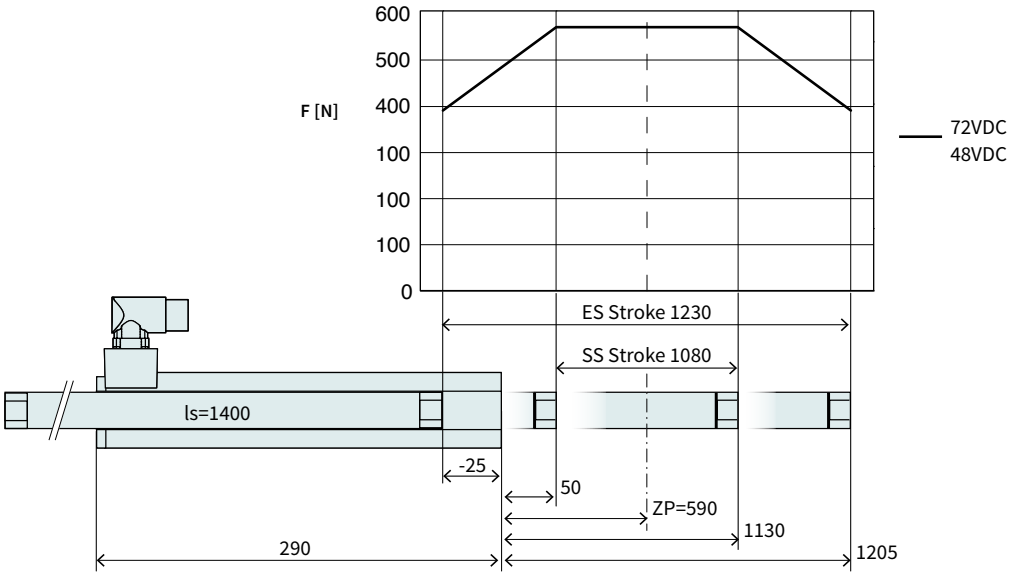

Dimensions in mm

Technical Data P01-48x240F/1080x1230				
Stroke				
Standard Stroke (SS)	mm	(in)	1080	(42.49)
Extended Stroke (ES)	mm	(in)	1230	(48.39)
Force				
Max. Force @ 48VDC	N	(lbf)	572	(129)
Max. Force @ 72VDC	N	(lbf)	572	(129)
Max. Cont. Force [Passive cooling/ Fan / Fluid]	N	(lbf)	140 / 240 / -	(32 / 55 / -)
Max. Border Force relative	%		69	
Force Constant	N/A_{pk}	(lbf/A_{pk})	22	(4.95)
Velocity				
Max. Velocity @ 48VDC	m/s	(in/s)	1.9	(78.9)
Max. Velocity @ 72VDC	m/s	(in/s)	2.9	(119.9)
Position Detection				
Repeatability	mm	(in)	±0.05	(±0.002)
Linearity	%		± 0.15	
Electrical Data				
Max. Current @ 48VDC	A_{pk}		25.9	
Max. Current @ 72VDC	A_{pk}		25.9	
Max. Cont. Current [Passive cooling /Fan / Fluid]	A_{pk}		6.5 / 11 / -	
Thermal Data				
Max. Winding Temperature (Sensor)	°C		90	
Thermal Resistance [Passive cooling / Fan / Fluid]	°K/W		0.95 / 0.32 / -	
Thermal Time Constant [Passive cooling / Fan / Fluid]	s		970 / 330 / -	
Mechanical Data				
Slider Length	mm	(in)	1400	(55)
Slider Mass	g	(lb)	6350	(13.97)



Item	Description	Item-No.
PS01-48x240F-C	Stator with IP67 Connector M23/9(m)	0150-1220
PL01-28x1400/1320	Slider 'standard'	0150-1389

P01-48x240F/1290x1440

Max. Stroke: 1440 mm
Peak Force: 572 N

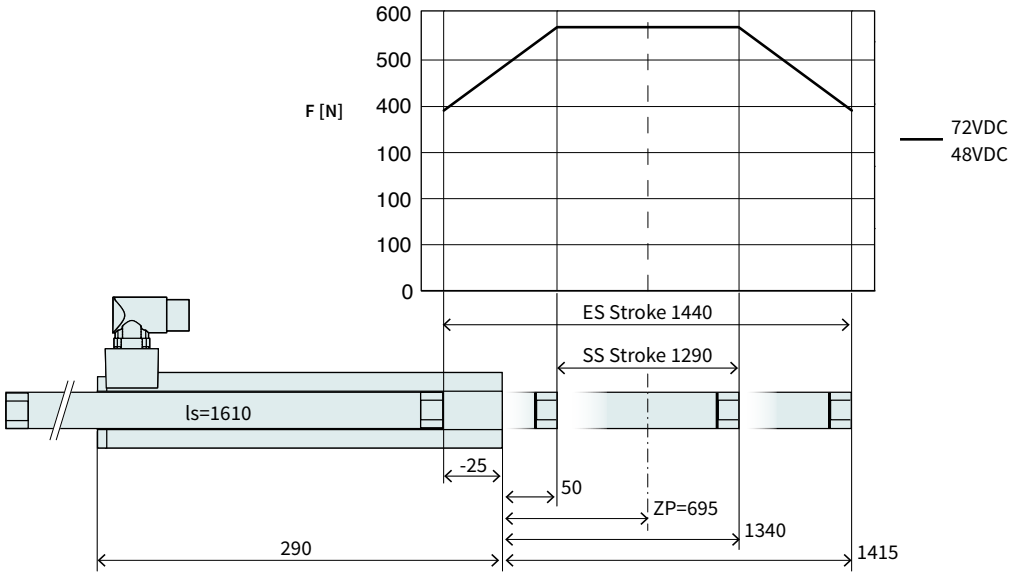

Dimensions in mm

Technical Data P01-48x240F/1290x1440				
Stroke				
Standard Stroke (SS)	mm	(in)	1290	(50.79)
Extended Stroke (ES)	mm	(in)	1440	(56.7)
Force				
Max. Force @ 48VDC	N	(lbf)	572	(129)
Max. Force @ 72VDC	N	(lbf)	572	(129)
Max. Cont. Force [Passive cooling/ Fan / Fluid]	N	(lbf)	140 / 240 / -	(32 / 55 / -)
Max. Border Force relative	%		69	
Force Constant	N/A_{pk}	(lbf/A_{pk})	22	(4.95)
Velocity				
Max. Velocity @ 48VDC	m/s	(in/s)	1.9	(78.9)
Max. Velocity @ 72VDC	m/s	(in/s)	2.9	(119.9)
Position Detection				
Repeatability	mm	(in)	±0.05	(±0.002)
Linearity	%		± 0.15	
Electrical Data				
Max. Current @ 48VDC	A_{pk}		25.9	
Max. Current @ 72VDC	A_{pk}		25.9	
Max. Cont. Current [Passive cooling /Fan / Fluid]	A_{pk}		6.5 / 11 / -	
Thermal Data				
Max. Winding Temperature (Sensor)	°C		90	
Thermal Resistance [Passive cooling / Fan / Fluid]	°K/W		0.95 / 0.32 / -	
Thermal Time Constant [Passive cooling / Fan / Fluid]	s		970 / 330 / -	
Mechanical Data				
Slider Length	mm	(in)	1610	(63)
Slider Mass	g	(lb)	7330	(16.13)



Item	Description	Item-No.
PS01-48x240F-C	Stator with IP67 Connector M23/9(m)	0150-1220
PL01-28x1610/1530	Slider 'standard'	0150-1390

P01-48x240F/1500x1650

Max. Stroke: 1650 mm
Peak Force: 572 N

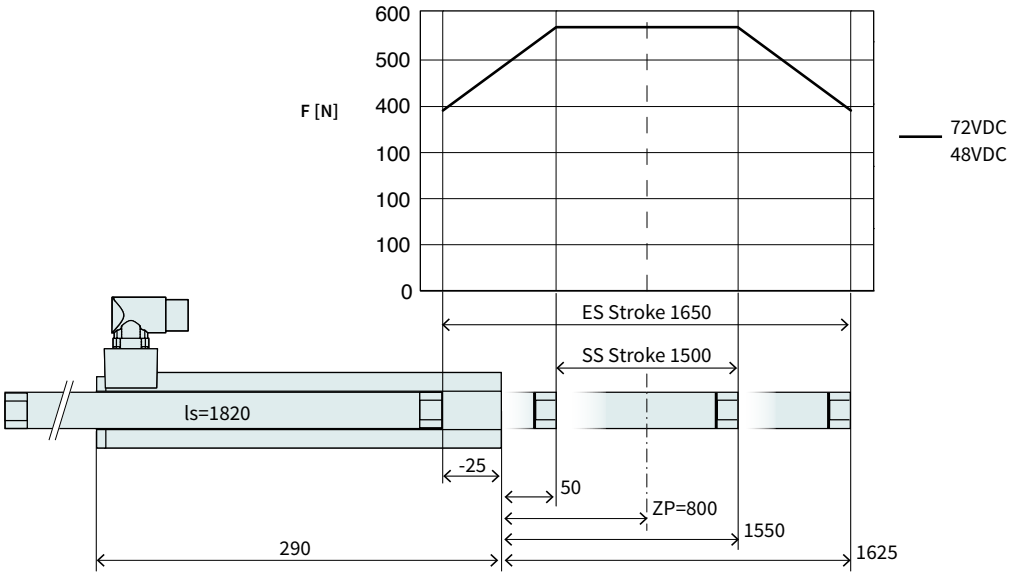

Dimensions in mm

Technical Data P01-48x240F/1500x1650				
Stroke				
Standard Stroke (SS)	mm	(in)	1500	(59.1)
Extended Stroke (ES)	mm	(in)	1650	(64.99)
Force				
Max. Force @ 48VDC	N	(lbf)	572	(129)
Max. Force @ 72VDC	N	(lbf)	572	(129)
Max. Cont. Force [Passive cooling/ Fan / Fluid]	N	(lbf)	140 / 240 / -	(32 / 55 / -)
Max. Border Force relative	%		69	
Force Constant	N/A_{pk}	(lbf/A_{pk})	22	(4.95)
Velocity				
Max. Velocity @ 48VDC	m/s	(in/s)	1.9	(78.9)
Max. Velocity @ 72VDC	m/s	(in/s)	2.9	(119.9)
Position Detection				
Repeatability	mm	(in)	±0.05	(±0.002)
Linearity	%		± 0.15	
Electrical Data				
Max. Current @ 48VDC	A_{pk}		25.9	
Max. Current @ 72VDC	A_{pk}		25.9	
Max. Cont. Current [Passive cooling /Fan / Fluid]	A_{pk}		6.5 / 11 / -	
Thermal Data				
Max. Winding Temperature (Sensor)	°C		90	
Thermal Resistance [Passive cooling / Fan / Fluid]	°K/W		0.95 / 0.32 / -	
Thermal Time Constant [Passive cooling / Fan / Fluid]	s		970 / 330 / -	
Mechanical Data				
Slider Length	mm	(in)	1820	(72)
Slider Mass	g	(lb)	8300	(18.26)



Item	Description	Item-No.
PS01-48x240F-C	Stator with IP67 Connector M23/9(m)	0150-1220
PL01-28x1820/1740	Slider 'standard'	0150-1395

P01-48x240F/1680x1830

Max. Stroke: 1830 mm
Peak Force: 572 N

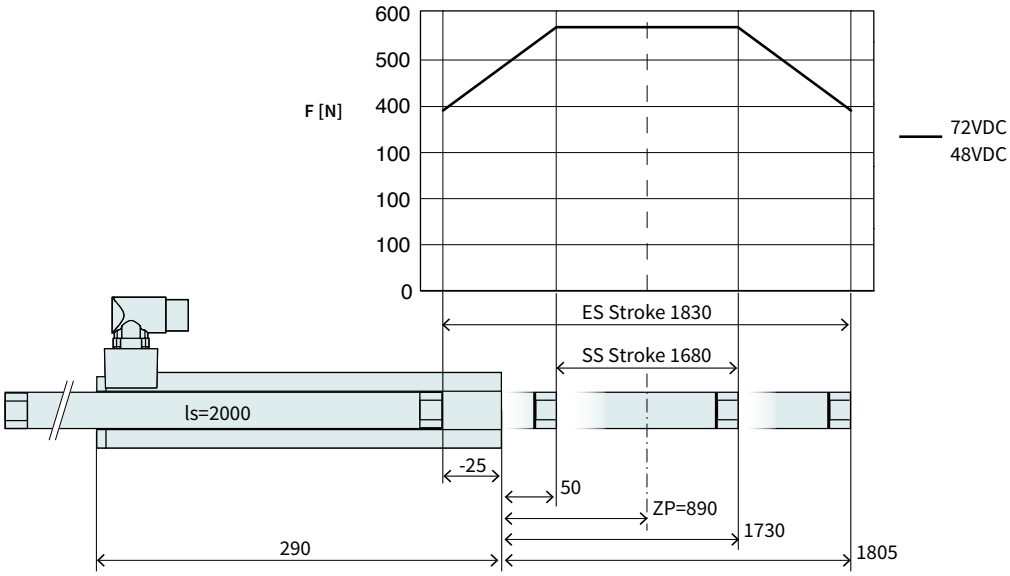

Dimensions in mm

Technical Data P01-48x240F/1680x1830				
Stroke				
Standard Stroke (SS)	mm	(in)	1680	(66.09)
Extended Stroke (ES)	mm	(in)	1830	(71.99)
Force				
Max. Force @ 48VDC	N	(lbf)	572	(129)
Max. Force @ 72VDC	N	(lbf)	572	(129)
Max. Cont. Force [Passive cooling/ Fan / Fluid]	N	(lbf)	140 / 240 / -	(32 / 55 / -)
Max. Border Force relative	%		69	
Force Constant	N/A_{pk}	(lbf/A_{pk})	22	(4.95)
Velocity				
Max. Velocity @ 48VDC	m/s	(in/s)	1.9	(78.9)
Max. Velocity @ 72VDC	m/s	(in/s)	2.9	(119.9)
Position Detection				
Repeatability	mm	(in)	±0.05	(±0.002)
Linearity	%		± 0.15	
Electrical Data				
Max. Current @ 48VDC	A_{pk}		25.9	
Max. Current @ 72VDC	A_{pk}		25.9	
Max. Cont. Current [Passive cooling /Fan / Fluid]	A_{pk}		6.5 / 11 / -	
Thermal Data				
Max. Winding Temperature (Sensor)	°C		90	
Thermal Resistance [Passive cooling / Fan / Fluid]	°K/W		0.95 / 0.32 / -	
Thermal Time Constant [Passive cooling / Fan / Fluid]	s		970 / 330 / -	
Mechanical Data				
Slider Length	mm	(in)	2000	(79)
Slider Mass	g	(lb)	9140	(20.11)



Item	Description	Item-No.
PS01-48x240F-C	Stator with IP67 Connector M23/9(m)	0150-1220
PL01-28x2000/1920	Slider 'standard'	0150-1396

3

Linear Guides H01



HM01-48x240/120	Linear Module 48x240 with 120 mm Stroke		
H-Guide	H01-48x250/120	H-Guide for P01-48x240, Stroke max 120 mm	0150-5100
	H01-48x250/120-GF	H-Guide for P01-48x240, Stroke max 120 mm	0150-5104
Stator	PS01-48x240F-C	Stator with IP67 Connector M23/9(m)	0150-1220
Slider	PL01-28x410/330	Slider Standard for H01-48x250/120	0150-1381

HM01-48x240/210	Linear Module 48x240 with 210 mm Stroke		
H-Guide	H01-48x250/210	H-Guide for P01-48x240, Stroke max 210 mm	0150-5101
	H01-48x250/210-GF	H-Guide for P01-48x240, Stroke max 210 mm	0150-5105
Stator	PS01-48x240F-C	Stator with IP67 Connector M23/9(m)	0150-1220
Slider	PL01-28x500/420	Slider Standard for H01-48x250/210	0150-1382

HM01-48x240/330	Linear Module 48x240 with 330 mm Stroke		
H-Guide	H01-48x250/330	H-Guide for P01-48x240, Stroke max 330 mm	0150-5102
	H01-48x250/330-GF	H-Guide for P01-48x240, Stroke max 330 mm	0150-5106
Stator	PS01-48x240F-C	Stator with IP67 Connector M23/9(m)	0150-1220
Slider	PL01-28x620/540	Slider Standard for H01-48x250/330	0150-1383

HM01-48x240/420	Linear Module 48x240 with 420 mm Stroke		
H-Guide	H01-48x250/420	H-Guide for P01-48x240, Stroke max 420 mm	0150-5103
	H01-48x250/420-GF	H-Guide for P01-48x240, Stroke max 420 mm	0150-5107
Stator	PS01-48x240F-C	Stator with IP67 Connector M23/9(m)	0150-1220
Slider	PL01-28x710/630	Slider Standard for H01-48x250/420	0150-1384

Accessories			
Brake	HB01-48	Pneumatic Brake for H01-48/1000N(4-6Bar)	0150-5098
Fan	HV01-37/48	Fan cooling for H01-37/48 &PF02-37/48	0150-5051
MagSpring	MF01-37/H37	Flange MagSpring 37 / H-Guide 23/37/48	0250-2307
	MA01-37/H48	Adapter MagSpring 37 / H-Guide 48	0250-0118
Sliding block	PFN01-8/M6	Sliding block 8mm, M6 thread	0250-3245
Centering sleeve	HC01-11/05	Centering sleeve D11x5 mm	0150-3252
Wipers	HA01-48/28-F	Wiper for H01-48 guides, front side	0150-5109

FIND MORE PRODUCT DETAILS IN THE CHAPTER "LINEAR GUIDES".

Bridge Guide B01



BM01-48x240/90	**Bridge Module 48x240 with 90 mm Stroke**			
B-Guide	B01-48x250/90	B-Guide for P01-48x240, Stroke max 90 mm	0150-5150
	B01-48x250/90-GF	B-Guide for P01-48x240, Stroke max 90 mm	0150-5154
Stator	PS01-48x240F-C	Stator with IP67 Connector M23/9(m)	0150-1220
Slider	PL01-27x410/330	High Clearance Slider for B01-48x250/90	0150-1468
BM01-48x240/180	**Bridge Module 48x240 with 180 mm Stroke**			
B-Guide	B01-48x250/180	B-Guide for P01-48x240, Stroke max 180mm	0150-5151
	B01-48x250/180-GF	B-Guide for P01-48x240, Stroke max 180mm	0150-5155
Stator	PS01-48x240F-C	Stator with IP67 Connector M23/9(m)	0150-1220
Slider	PL01-27x500/420	High Clearance Slider for B01-48x250/180	0150-1469
BM01-48x240/300	**Bridge Module 48x240 with 300 mm Stroke**			
B-Guide	B01-48x250/300	B-Guide for P01-48x240, Stroke max 300 mm	0150-5152
	B01-48x250/300-GF	B-Guide for P01-48x240, Stroke max 300 mm	0150-5156
Stator	PS01-48x240F-C	Stator with IP67 Connector M23/9(m)	0150-1220
Slider	PL01-27x620/540	High Clearance Slider for B01-48x250/300	0150-1470
BM01-48x240/390	**Bridge Module 48x240 with 390 mm Stroke**			
B-Guide	B01-48x250/390	B-Guide for P01-48x240, Stroke max 390 mm	0150-5153
	B01-48x250/390-GF	B-Guide for P01-48x240, Stroke max 390 mm	0150-5157
Stator	PS01-48x240F-C	Stator with IP67 Connector M23/9(m)	0150-1220
Slider	PL01-27x710/630	High Clearance Slider for B01-48x250/390	0150-1471

Accessories			
Brake	HB01-48	Pneumatic Brake for H01-48/1000N(4-6Bar)	0150-5098
Fan	HV01-37/48	Fan for H01-37 and -48 H-Guideen	0150-5051
MagSpring	MF01-37/H37	Flange MagSpring 37 / H-Guide 23/37/48	0250-2307
	MA01-37/H48	Adapter MagSpring 37 / H-Guide 48	0250-0118
Sliding block	PFN01-8/M6	Sliding block 8mm, M6 thread	0250-3245
Centering sleeve	HC01-11/05	Centering sleeve D11x5 mm	0150-3252
Wipers	HA01-48/27-F	Wiper for H01-48 guides, front side	0150-5178

FIND MORE PRODUCT DETAILS IN THE CHAPTER "LINEAR GUIDES".

Motor Cable

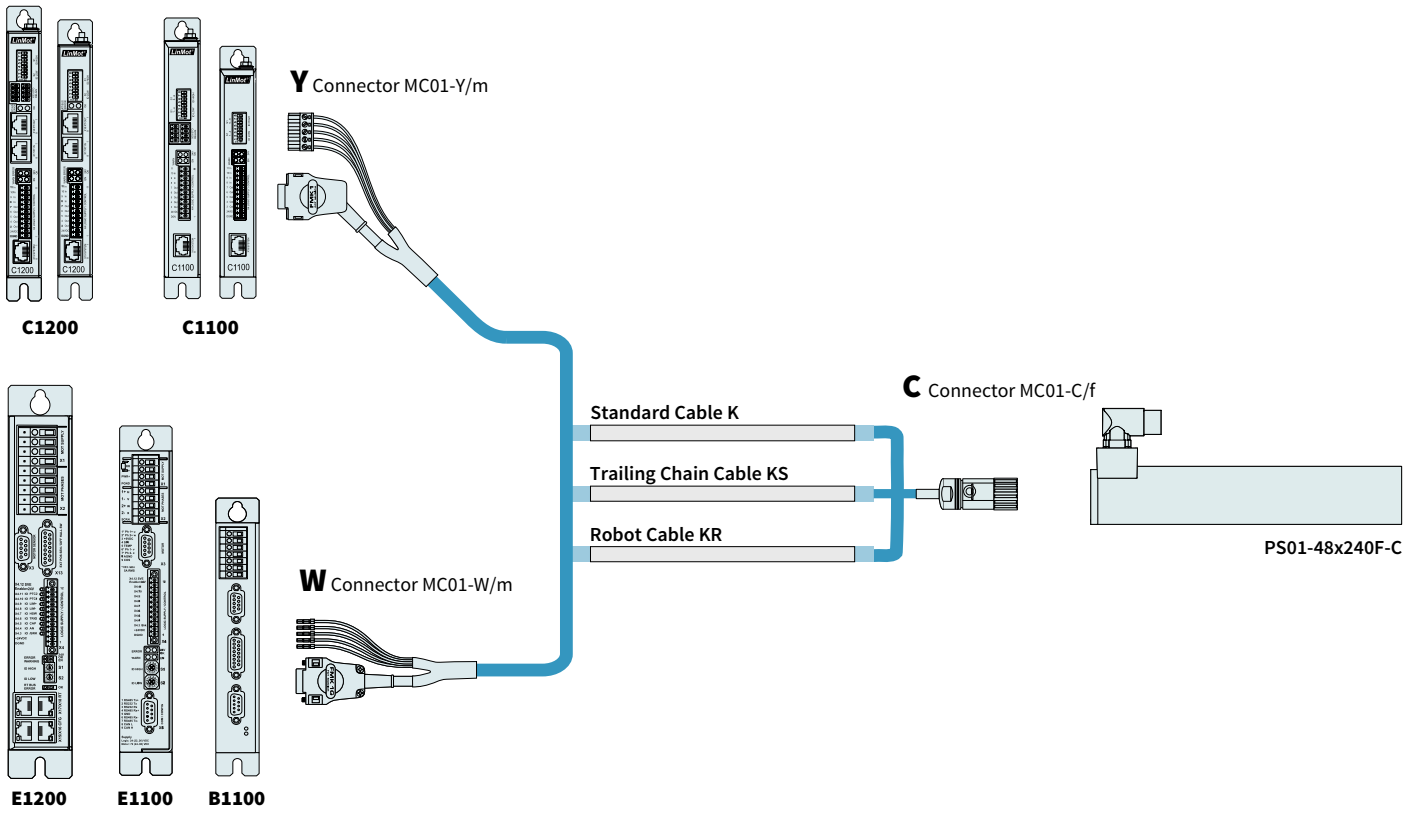

ORDERING INFORMATION

STANDARD CABLE		
Item	**Description**	**Item-No.**
K15-W/C-2	Motor Cable W/C, 2 m	0150-1811
K15-W/C-4	Motor Cable W/C, 4 m	0150-1801
K15-W/C-6	Motor Cable W/C, 6 m	0150-1802
K15-W/C-8	Motor Cable W/C, 8 m	0150-1803
K15-W/C-	Motor Cable W/C, Custom length	0150-3131
K15-Y/C-2	Motor Cable Y/R, 2 m	0150-2429
K15-Y/C-4	Motor Cable Y/R, 4 m	0150-2430
K15-Y/C-6	Motor Cable Y/R, 6 m	0150-2431
K15-Y/C-8	Motor Cable Y/R, 8 m	0150-2432
K15-Y-Fe/C-	Motor Cable Y-Fe/R, Custom length	0150-3506

TRAILING CHAIN CABLE		
Item	**Description**	**Item-No.**
KS10-W/C-4	Trailing Chain Cable W/C, 4 m	0150-1807
KS10-W/C-6	Trailing Chain Cable W/C, 6 m	0150-1858
KS10-W/C-8	Trailing Chain Cable W/C, 8 m	0150-1808
KS10-W/C-	Trailing Chain Cable W/C, Custom length	0150-3139
KS10-Y/C-4	Trailing Chain Cable Y/C, 4 m	0150-2439
KS10-Y/C-6	Trailing Chain Cable Y/C, 6 m	0150-2440
KS10-Y/C-8	Trailing Chain Cable Y/C, 8 m	0150-2441
KS10-Y/C-	Trailing Chain Cable Y-Fe/C, Custom length	0150-3511

ROBOT CABLE		
Item	**Description**	**Item-No.**
KR10-W/C-	Robot Cable KR10-W/C, Custom length	0150-3199
KR10-Y-Fe/C-	Robot Cable KR10-Y-Fe/C, Custom length	0150-3515

CONNECTOR & CABLE (INDIVIDUAL)		
Item	**Description**	**Item-No.**
MC01-W/m	Motor Connector W/m	0150-3140
MC01-Y-Fe/m	Motor Connector Y-Fe/m	0150-3289
MC01-C/f	Motor Connector C/f	0150-3080
MC01-P/f	Motor Connector P/f	0150-3021
K15-04/05	Motor Cable per m	0150-1978
KS10-04/05	Trailing Chain Cable per m	0150-1977
KR10-04/05	Robot Cable per m	0150-1830

MOTOR FLANGES



Item	Description	Item-No.
PF01-48x120	Flange 48x120 mm	0150-1976
PF01-48x226	Flange 48x226 mm	0150-2108

FIND MORE PRODUCT DETAILS IN THE CHAPTER "ACCESSORIES".

FANS



Item	Description	Item-No.
HV01-37/48	Fan cooling for H01-37, B01-37 and PF02-37	0150-5051

FIND MORE PRODUCT DETAILS IN THE CHAPTER "ACCESSORIES".

SLIDER MOUNTING



Item	Description	Item-No.
PLF01-28	Fixed Bearing Set for 27 mm and 28mm Slider	0150-3087
PLF01-28-SS	Fixed Bearing Set for 27 mm and 28 mm Slider, Stainless steel	0150-3297
PLL01-27	Floating Bearing for PL01-27 Slider	0150-3294
PLL01-28	Floating Bearing for PL01-28 Slider	0150-3094
PLM01-28-MK	Mounting Kit for PL01-28 Slider	0150-3095

FIND MORE PRODUCT DETAILS IN THE CHAPTER "ACCESSORIES".

WIPERS



Item	Description	Item-No.
PA01-48/27-F	Wipers for PS01-48x...	0150-3228
PA01-48/27-R	Wipers for PS01-48x...-C	0150-3229
PA01-48/28-F	Wipers for PS01-48x...	0150-3127
PA01-48/28-R	Wipers for PS01-48x...-C	0150-3202

FIND MORE PRODUCT DETAILS IN THE CHAPTER "ACCESSORIES".

EXTERNAL POSITION SENSORS



Item	Description	Item-No.
MS01-1/D	Linear Encoder 1µm, A/B (for inc. strip)	0150-1840
MB01-1000	Magnetic incremental strip for MS01-1/D, per cm	0150-1963
KS025-D/D-Encoder	Encoder Cable (Length in m)	0150-3166
KS025-D/D15-Encoder	Encoder Cable (Length in m)	0150-3168

FIND MORE PRODUCT DETAILS IN THE CHAPTER "ACCESSORIES".



Item	Description	Item-No.
MS01-1/D-SSI	Linear Encoder 1µm, A/B (for absolute strip)	0150-2095
MB01-1000-ABS	Magnetic absolute strip for MS01-1/D-SSI (per cm)	0150-2096
EC01-ABS/ENC-12-S	MS01-1/D-SSI Encoder connector straight	0150-3616
KSS01-12-D15/ABS-ENC	Special cable for MS01-1/D-SSI on C1100/C1200/C1400/E1200/E1400 Drives	0150-3652

FIND MORE PRODUCT DETAILS IN THE CHAPTER "ACCESSORIES".

LINEAR MOTORS P01-48x360F



- Highly dynamic drives
- With a special F-winding for a higher maximum speed
- Wide stroke range
- Available with rotatable connector
- Optional with air cooling
- Wide range of applications in handling modules as well as in plant and machine construction

LINEAR MOTORS P01-48x360F

Technical Data ____ **371**

Motor Specifications

P01-48x360F/60x210 ..... **375**

P01-48x360F/180x330 ..... **376**

P01-48x360F/270x420 ..... **377**

P01-48x360F/360x510 ..... **378**

P01-48x360F/480x630 ..... **379**

P01-48x360F/570x720 ..... **380**

P01-48x360F/780x930 ..... **381**

P01-48x360F/960x1110 ..... **382**

P01-48x360F/1170x1320 ..... **383**

P01-48x360F/1380x1530 ..... **384**

P01-48x360F/1560x1710 ..... **385**

Linear Guides ____ **386**

Accessories ____ **387**



MOTOR FAMILY P01-48x360F

Technical Data				
Stroke				
Standard Stroke (SS)	mm	(in)	≤ 1560	(≤ 61.4)
Extended Stroke (ES)	mm	(in)	≤ 1710	(≤ 67.3)
Force				
Max. Force @ 48VDC	N	(lbf)	905	(204)
Max. Force @ 72VDC	N	(lbf)	1020	(230)
Max. Cont. Force [Passive cooling/ Fan / Fluid]	N	(lbf)	200 / 340 / -	(45 / 77 / -)
Max. Border Force relative	%		≤ 79	
Force Constant	N/A_{pk}	(lbf/A_{pk})	32	(7.19)
Velocity				
Max. Velocity @ 48VDC	m/s	(in/s)	1.3	(53.9)
Max. Velocity @ 72VDC	m/s	(in/s)	2	(80.9)
Position Detection				
Position Resolution	mm	(in)	0.007	(0.0003)
Repeatability	mm	(in)	±0.05	(±0.002)
Position Resolution with ES	mm	(in)	0.001	(0.00004)
Repeatability with ES	mm	(in)	±0.01	(±0.0004)
Linearity with ES	mm	(in)	±0.01	(±0.0004)
Electrical Data				
Max. Current @ 48VDC	A_{pk}		28.2	
Max. Current @ 72VDC	A_{pk}		31.9	
Max. Cont. Current [Passive cooling /Fan / Fluid]	A_{pk}		6.2 / 11 / -	
Terminal Resistance 25 °C / 120 °C	Ohm		1.4 / 1.9	
Terminal Inductivity	mH		1.6	
Magnetic Period	mm	(in)	60	(2.35)
Thermal Data				
Max. Winding Temperature (Sensor)	°C		90	
Thermal Resistance [Passive cooling / Fan / Fluid]	°K/W		0.72 / 0.24 / -	
Thermal Time Constant [Passive cooling / Fan / Fluid]	s		1000 / 340 / -	
Mechanical Data				
Stator Diameter	mm	(in)	48	(1.9)
Stator Length [Connector type / Cable type]	mm	(in)	409.5	(16)
Stator Mass	g	(lb)	2880	(6.34)
Slider Diameter	mm	(in)	28	(1.1)
Slider Length	mm	(in)	500 - 2000	(20 - 79)
Slider Mass	g	(lb)	2160 - 9140	(4.75 -20.1)
IP Code			IP 65	

STATOR

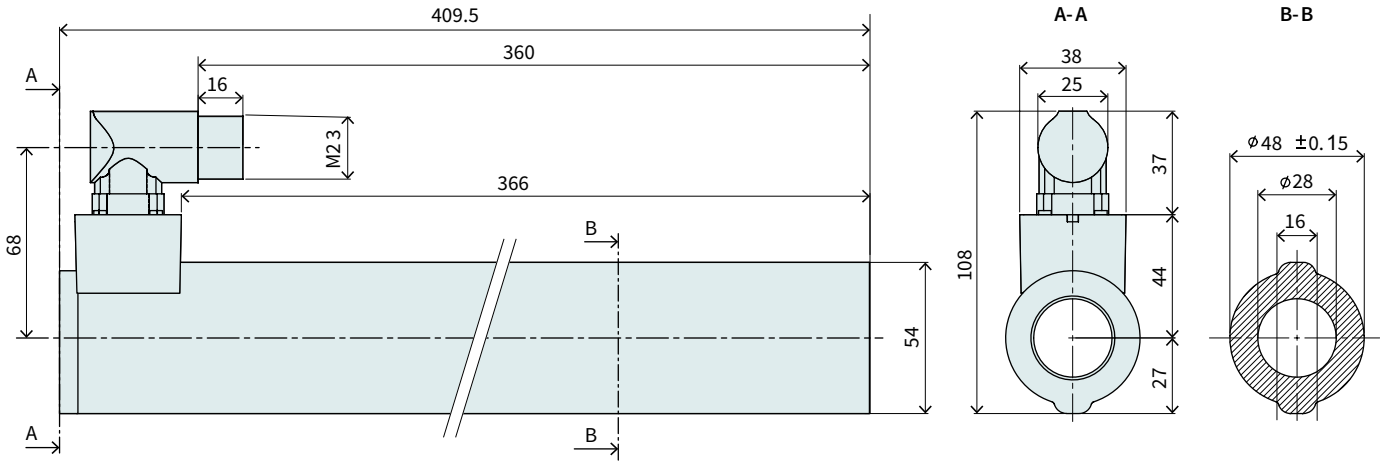

Item	Description	Item-No.
PS01-48x360F-C	Stator with IP67 Connector M23/9(m)	0150-1269

CONNECTOR

Motor Connector Wiring	PS01-37x240-C PS01-37x240-C20 C-Connector	Wire color motor cable
Ph 1+	A	red
Ph 1-	B	pink
Ph 2+	C	blue
Ph 2-	D	grey
+5VDC	E	white
GND	F	inner shield
Sin	G	yellow
Cos	H	green
Temp.	L	black
Shield	Housing	outer Shield

C-Connector

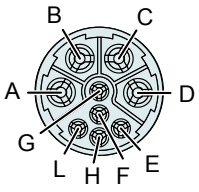

View: Motor Connector, plug side

SLIDER

Slider Standard / Heavy Duty

Number of grooves determines the slider type
(see chapter 2 / slider) and marks the front end.

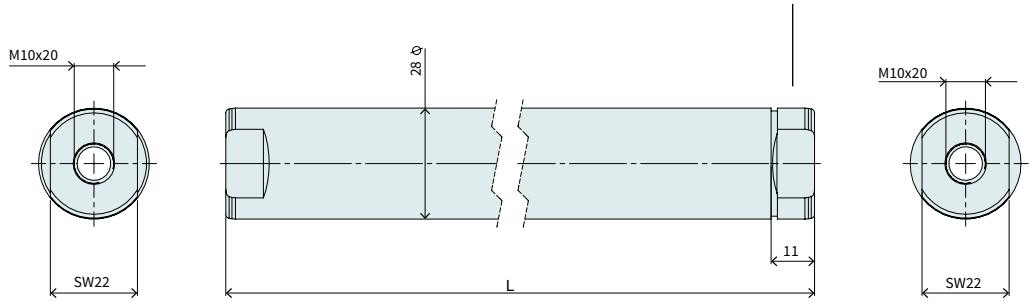

Hollow slider

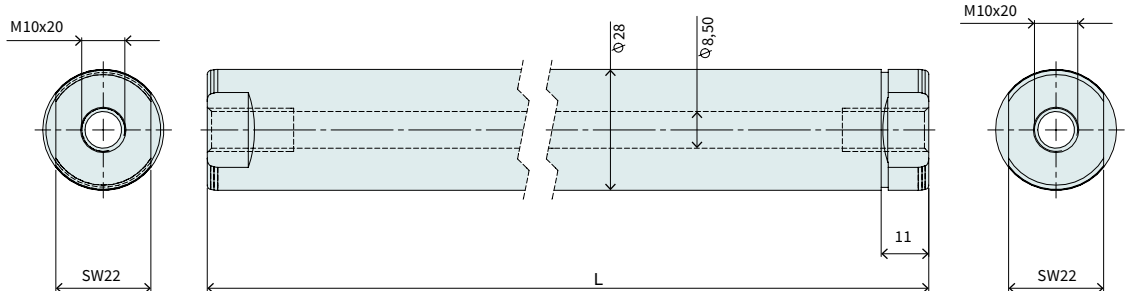

High-Clearance Slider

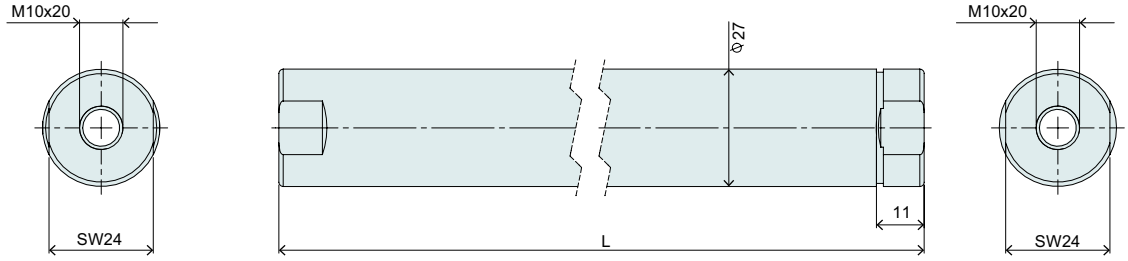

Slider Standard				
Item	Description	Max. Stroke [mm]	Standard Stroke [mm]	Item-No.
PL01-28x500/420	Slider 'standard'	330	180	0150-1382
PL01-28x620/540	Slider 'standard'	450	300	0150-1383
PL01-28x710/630	Slider 'standard'	540	390	0150-1384
PL01-28x800/720	Slider 'standard'	630	480	0150-1385
PL01-28x920/840	Slider 'standard'	750	600	0150-1386
PL01-28x1010/930	Slider 'standard'	840	690	0150-1387
PL01-28x1220/1140	Slider 'standard'	1050	900	0150-1388
PL01-28x1400/1320	Slider 'standard'	1230	1080	0150-1389
PL01-28x1610/1530	Slider 'standard'	1440	1290	0150-1390
PL01-28x1820/1740	Slider 'standard'	1650	1500	0150-1395
PL01-28x2000/1920	Slider 'standard'	1830	1680	0150-1396

Slider Heavy Duty				
Item	Description	Max. Stroke [mm]	Standard Stroke [mm]	Item-No.
PL02-28x500/420	Slider 'heavy duty'	330	180	0150-1413
PL02-28x620/540	Slider 'heavy duty'	450	300	0150-1414
PL02-28x710/630	Slider 'heavy duty'	540	390	0150-1415
PL02-28x800/720	Slider 'heavy duty'	630	480	0150-1416
PL02-28x920/840	Slider 'heavy duty'	750	600	0150-1417

Hollow slider				
Item	**Description**	**Max. Stroke [mm]**	**Standard Stroke [mm]**	**Item-No.**
PL01-28x500/420-L	Slider 'standard L'	330	180	0150-1480
PL01-28x620/540-L	Slider 'standard L'	450	300	0150-1481
PL01-28x710/630-L	Slider 'standard L'	540	390	0150-1482
PL01-28x800/720-L	Slider 'standard L'	630	480	0150-1483
PL01-28x920/840-L	Slider 'standard L'	750	600	0150-1484

High-Clearance Slider				
Item	**Description**	**Max. Stroke [mm]**	**Standard Stroke [mm]**	**Item-No.**
PL01-27x500/420	Slider 'high clearance'	330	180	0150-1469
PL01-27x620/540	Slider 'high clearance'	450	300	0150-1470
PL01-27x710/630	Slider 'high clearance'	540	390	0150-1471

P01-48x360F/60x210

Max. Stroke: 210 mm
Peak Force: 1020 N

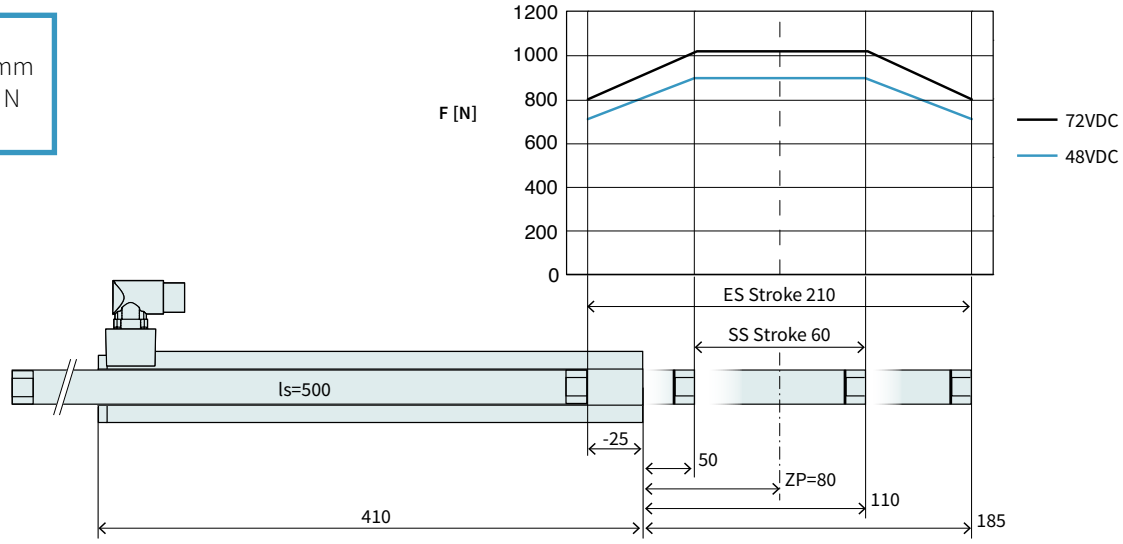

Dimensions in mm

Technical Data P01-48x360F/60x210				
Stroke				
Standard Stroke (SS)	mm	(in)	60	(2.35)
Extended Stroke (ES)	mm	(in)	210	(8.26)
Force				
Max. Force @ 48VDC	N	(lbf)	905	(204)
Max. Force @ 72VDC	N	(lbf)	1020	(230)
Max. Cont. Force [Passive cooling/ Fan / Fluid]	N	(lbf)	200 / 340 / -	(45 / 77 / -)
Max. Border Force relative	%		79	
Force Constant	N/A_{pk}	(lbf/A_{pk})	32	(7.19)
Velocity				
Max. Velocity @ 48VDC	m/s	(in/s)	1.3	(53.9)
Max. Velocity @ 72VDC	m/s	(in/s)	2	(80.9)
Position Detection				
Repeatability	mm	(in)	±0.05	(±0.002)
Linearity	%		± 0.45	
Electrical Data				
Max. Current @ 48VDC	A_{pk}		28.2	
Max. Current @ 72VDC	A_{pk}		31.9	
Max. Cont. Current [Passive cooling /Fan / Fluid]	A_{pk}		6.2 / 11 / -	
Thermal Data				
Max. Winding Temperature (Sensor)	°C		90	
Thermal Resistance [Passive cooling / Fan / Fluid]	°K/W		0.72 / 0.24 / -	
Thermal Time Constant [Passive cooling / Fan / Fluid]	s		1000 / 340 / -	
Mechanical Data				
Slider Length	mm	(in)	500	(20)
Slider Mass	g	(lb)	2160	(4.75)

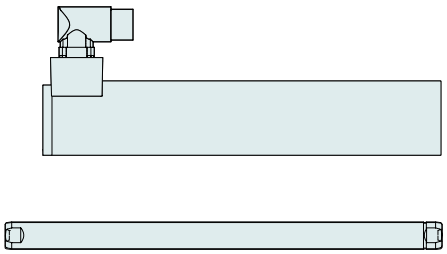

Item	Description	Item-No.
PS01-48x360F-C	Stator with IP67 Connector M23/9(m)	0150-1269

PL01-28x500/420	Slider 'standard'	0150-1382
PL02-28x500/420	Slider 'heavy duty'	0150-1413
PL01-28x500/420-L*	Slider 'standard L'	0150-1480
PL01-27x500/420*	Slider 'high clearance'	0150-1469

* With this slider, the motor specifications above change.

P01-48x360F/180x330

Max. Stroke: 330 mm
Peak Force: 1020 N

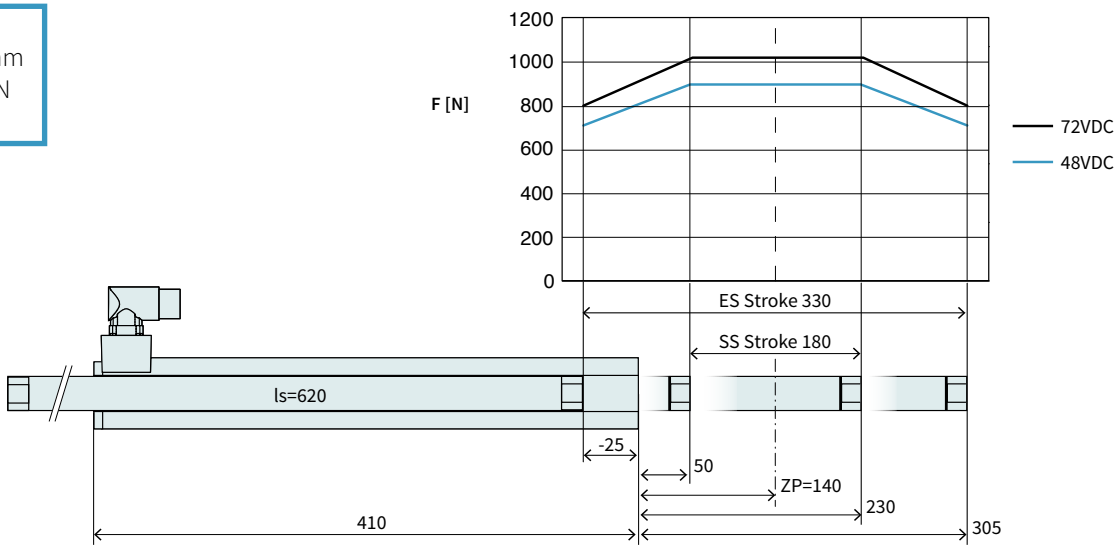

Dimensions in mm

Technical Data P01-48x360F/180x330				
Stroke				
Standard Stroke (SS)	mm	(in)	180	(7.08)
Extended Stroke (ES)	mm	(in)	330	(12.99)
Force				
Max. Force @ 48VDC	N	(lbf)	905	(204)
Max. Force @ 72VDC	N	(lbf)	1020	(230)
Max. Cont. Force [Passive cooling/ Fan / Fluid]	N	(lbf)	200 / 340 / -	(45 / 77 / -)
Max. Border Force relative	%		79	
Force Constant	N/A_{pk}	(lbf/A_{pk})	32	(7.19)
Velocity				
Max. Velocity @ 48VDC	m/s	(in/s)	1.3	(53.9)
Max. Velocity @ 72VDC	m/s	(in/s)	2	(80.9)
Position Detection				
Repeatability	mm	(in)	±0.05	(±0.002)
Linearity	%		± 0.35	
Electrical Data				
Max. Current @ 48VDC	A_{pk}		28.2	
Max. Current @ 72VDC	A_{pk}		31.9	
Max. Cont. Current [Passive cooling /Fan / Fluid]	A_{pk}		6.2 / 11 / -	
Thermal Data				
Max. Winding Temperature (Sensor)	°C		90	
Thermal Resistance [Passive cooling / Fan / Fluid]	°K/W		0.72 / 0.24 / -	
Thermal Time Constant [Passive cooling / Fan / Fluid]	s		1000 / 340 / -	
Mechanical Data				
Slider Length	mm	(in)	620	(24)
Slider Mass	g	(lb)	2720	(5.98)





Item	Description	Item-No.
PS01-48x360F-C	Stator with IP67 Connector M23/9(m)	0150-1269

PL01-28x620/540	Slider 'standard'	0150-1383
PL02-28x620/540	Slider 'heavy duty'	0150-1414
PL01-28x620/540-L*	Slider 'standard L'	0150-1481
PL01-27x620/540*	Slider 'high clearance'	0150-1470

* With this slider, the motor specifications above change.

P01-48x360F/270x420

Max. Stroke: 420 mm
Peak Force: 1020 N

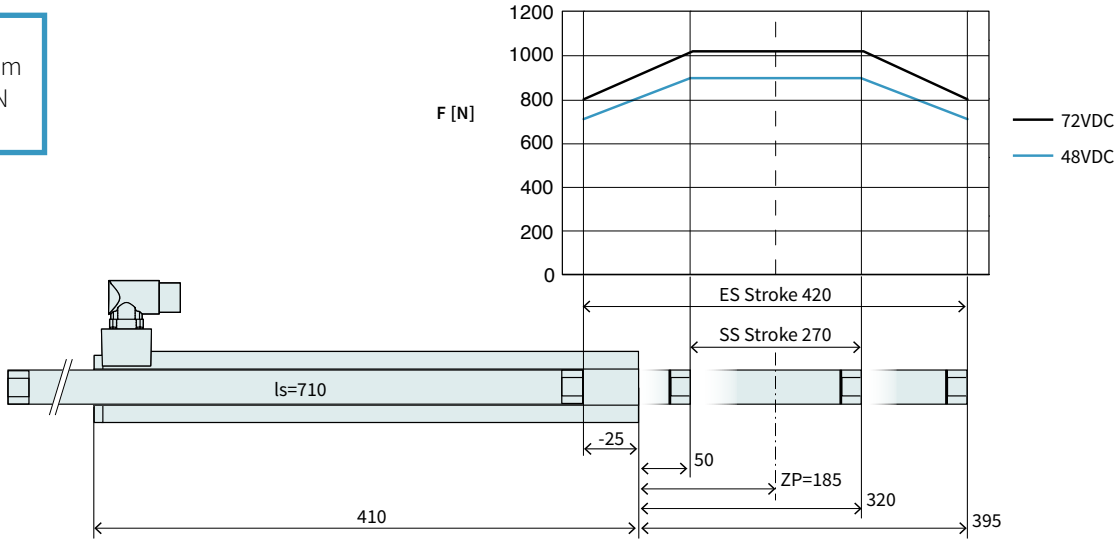

Dimensions in mm

Technical Data P01-48x360F/270x420				
Stroke				
Standard Stroke (SS)	mm	(in)	270	(10.59)
Extended Stroke (ES)	mm	(in)	420	(16.49)
Force				
Max. Force @ 48VDC	N	(lbf)	905	(204)
Max. Force @ 72VDC	N	(lbf)	1020	(230)
Max. Cont. Force [Passive cooling/ Fan / Fluid]	N	(lbf)	200 / 340 / -	(45 / 77 / -)
Max. Border Force relative	%		79	
Force Constant	N/A_{pk}	(lbf/A_{pk})	32	(7.19)
Velocity				
Max. Velocity @ 48VDC	m/s	(in/s)	1.3	(53.9)
Max. Velocity @ 72VDC	m/s	(in/s)	2	(80.9)
Position Detection				
Repeatability	mm	(in)	±0.05	(±0.002)
Linearity	%		± 0.3	
Electrical Data				
Max. Current @ 48VDC	A_{pk}		28.2	
Max. Current @ 72VDC	A_{pk}		31.9	
Max. Cont. Current [Passive cooling /Fan / Fluid]	A_{pk}		6.2 / 11 / -	
Thermal Data				
Max. Winding Temperature (Sensor)	°C		90	
Thermal Resistance [Passive cooling / Fan / Fluid]	°K/W		0.72 / 0.24 / -	
Thermal Time Constant [Passive cooling / Fan / Fluid]	s		1000 / 340 / -	
Mechanical Data				
Slider Length	mm	(in)	710	(28)
Slider Mass	g	(lb)	3140	(6.91)

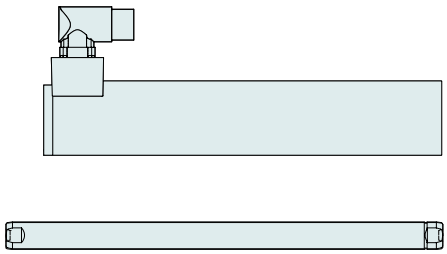

Item	Description	Item-No.
PS01-48x360F-C	Stator with IP67 Connector M23/9(m)	0150-1269

PL01-28x710/630	Slider 'standard'	0150-1384
PL02-28x710/630	Slider 'heavy duty'	0150-1415
PL01-28x710/630-L*	Slider 'standard L'	0150-1482
PL01-27x710/630*	Slider 'high clearance'	0150-1471

* With this slider, the motor specifications above change.

P01-48x360F/360x510

Max. Stroke: 510 mm
Peak Force: 1020 N

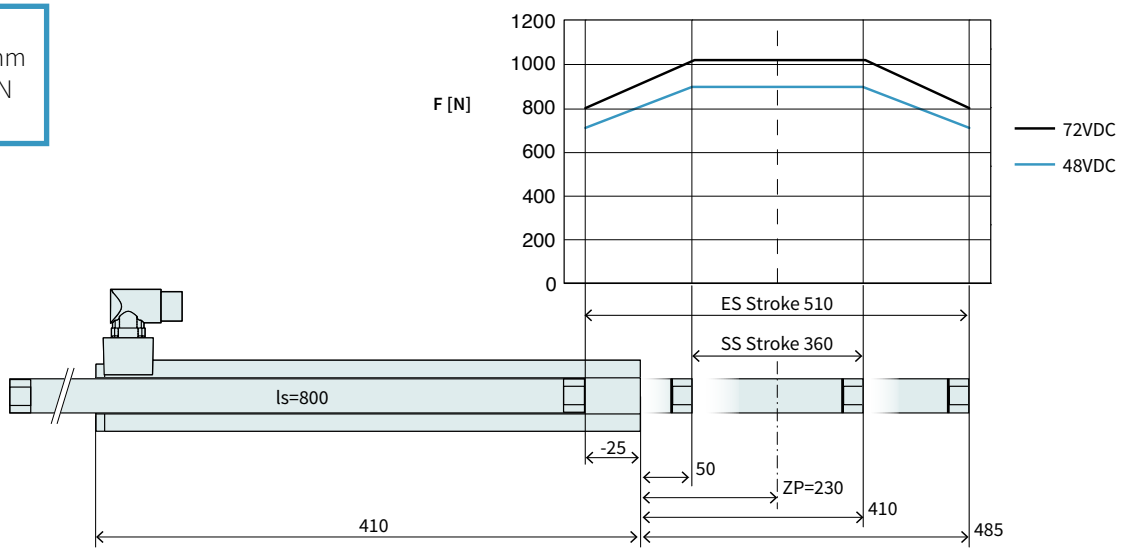

Dimensions in mm

Technical Data P01-48x360F/360x510				
Stroke				
Standard Stroke (SS)	mm	(in)	360	(14.19)
Extended Stroke (ES)	mm	(in)	510	(20.1)
Force				
Max. Force @ 48VDC	N	(lbf)	905	(204)
Max. Force @ 72VDC	N	(lbf)	1020	(230)
Max. Cont. Force [Passive cooling/ Fan / Fluid]	N	(lbf)	200 / 340 / -	(45 / 77 / -)
Max. Border Force relative	%		79	
Force Constant	N/A_{pk}	(lbf/A_{pk})	32	(7.19)
Velocity				
Max. Velocity @ 48VDC	m/s	(in/s)	1.3	(53.9)
Max. Velocity @ 72VDC	m/s	(in/s)	2	(80.9)
Position Detection				
Repeatability	mm	(in)	±0.05	(±0.002)
Linearity	%		± 0.25	
Electrical Data				
Max. Current @ 48VDC	A_{pk}		28.2	
Max. Current @ 72VDC	A_{pk}		31.9	
Max. Cont. Current [Passive cooling /Fan / Fluid]	A_{pk}		6.2 / 11 / -	
Thermal Data				
Max. Winding Temperature (Sensor)	°C		90	
Thermal Resistance [Passive cooling / Fan / Fluid]	°K/W		0.72 / 0.24 / -	
Thermal Time Constant [Passive cooling / Fan / Fluid]	s		1000 / 340 / -	
Mechanical Data				
Slider Length	mm	(in)	800	(31)
Slider Mass	g	(lb)	3560	(7.83)

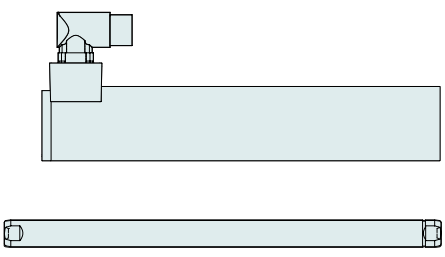

Item	Description	Item-No.
PS01-48x360F-C	Stator with IP67 Connector M23/9(m)	0150-1269

PL01-28x800/720	Slider 'standard'	0150-1385
PL02-28x800/720	Slider 'heavy duty'	0150-1416
PL01-28x800/720-L*	Slider 'standard L'	0150-1483

* With this slider, the motor specifications above change.

P01-48x360F/480x630

Max. Stroke: 630 mm
Peak Force: 1020 N

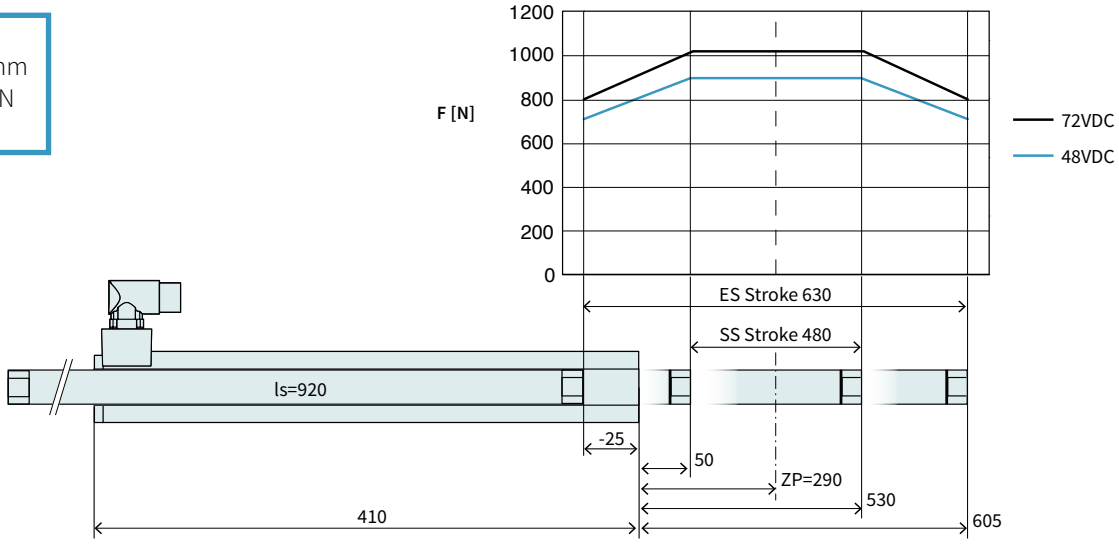

Dimensions in mm

Technical Data P01-48x360F/480x630				
Stroke				
Standard Stroke (SS)	mm	(in)	480	(18.89)
Extended Stroke (ES)	mm	(in)	630	(24.8)
Force				
Max. Force @ 48VDC	N	(lbf)	905	(204)
Max. Force @ 72VDC	N	(lbf)	1020	(230)
Max. Cont. Force [Passive cooling/ Fan / Fluid]	N	(lbf)	200 / 340 / -	(45 / 77 / -)
Max. Border Force relative	%		79	
Force Constant	N/A_{pk}	(lbf/A_{pk})	32	(7.19)
Velocity				
Max. Velocity @ 48VDC	m/s	(in/s)	1.3	(53.9)
Max. Velocity @ 72VDC	m/s	(in/s)	2	(80.9)
Position Detection				
Repeatability	mm	(in)	±0.05	(±0.002)
Linearity	%		± 0.2	
Electrical Data				
Max. Current @ 48VDC	A_{pk}		28.2	
Max. Current @ 72VDC	A_{pk}		31.9	
Max. Cont. Current [Passive cooling /Fan / Fluid]	A_{pk}		6.2 / 11 / -	
Thermal Data				
Max. Winding Temperature (Sensor)	°C		90	
Thermal Resistance [Passive cooling / Fan / Fluid]	°K/W		0.72 / 0.24 / -	
Thermal Time Constant [Passive cooling / Fan / Fluid]	s		1000 / 340 / -	
Mechanical Data				
Slider Length	mm	(in)	920	(36)
Slider Mass	g	(lb)	4120	(9.06)

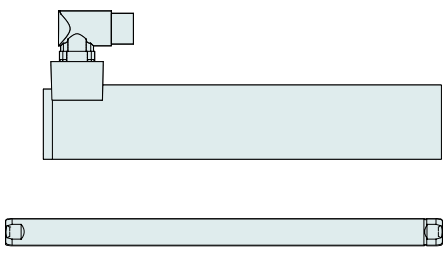

Item	Description	Item-No.
PS01-48x360F-C	Stator with IP67 Connector M23/9(m)	0150-1269

PL01-28x920/840	Slider 'standard'	0150-1386
PL02-28x920/840	Slider 'heavy duty'	0150-1417
PL01-28x920/840-L*	Slider 'standard L'	0150-1484

* With this slider, the motor specifications above change.

P01-48x360F/570x720

Max. Stroke: 720 mm
Peak Force: 1020 N

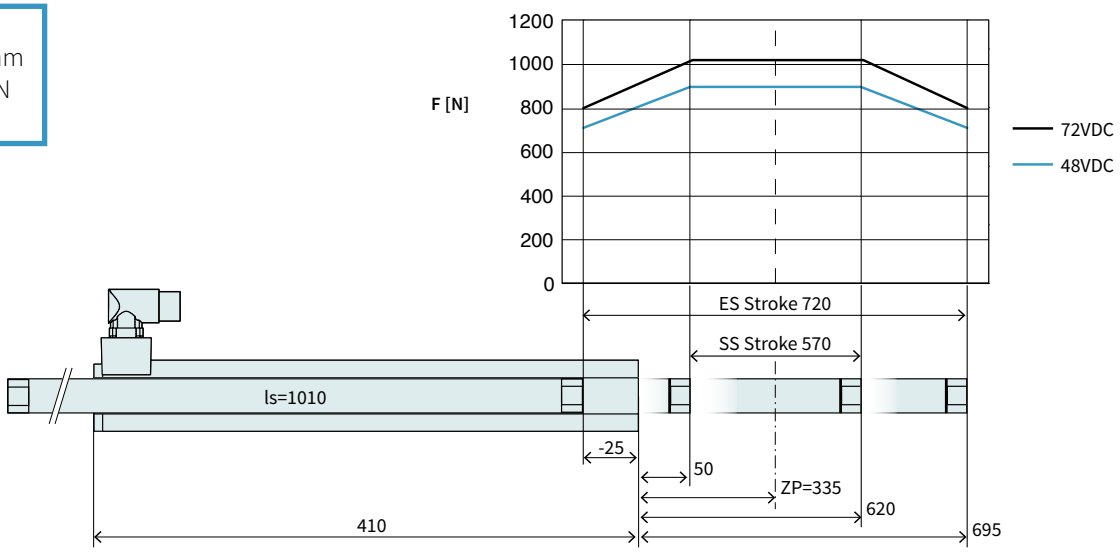

Dimensions in mm

Technical Data P01-48x360F/570x720				
Stroke				
Standard Stroke (SS)	mm	(in)	570	(22.39)
Extended Stroke (ES)	mm	(in)	720	(28.3)
Force				
Max. Force @ 48VDC	N	(lbf)	905	(204)
Max. Force @ 72VDC	N	(lbf)	1020	(230)
Max. Cont. Force [Passive cooling/ Fan / Fluid]	N	(lbf)	200 / 340 / -	(45 / 77 / -)
Max. Border Force relative	%		79	
Force Constant	N/A_{pk}	(lbf/A_{pk})	32	(7.19)
Velocity				
Max. Velocity @ 48VDC	m/s	(in/s)	1.3	(53.9)
Max. Velocity @ 72VDC	m/s	(in/s)	2	(80.9)
Position Detection				
Repeatability	mm	(in)	±0.05	(±0.002)
Linearity	%		± 0.2	
Electrical Data				
Max. Current @ 48VDC	A_{pk}		28.2	
Max. Current @ 72VDC	A_{pk}		31.9	
Max. Cont. Current [Passive cooling /Fan / Fluid]	A_{pk}		6.2 / 11 / -	
Thermal Data				
Max. Winding Temperature (Sensor)	°C		90	
Thermal Resistance [Passive cooling / Fan / Fluid]	°K/W		0.72 / 0.24 / -	
Thermal Time Constant [Passive cooling / Fan / Fluid]	s		1000 / 340 / -	
Mechanical Data				
Slider Length	mm	(in)	1010	(40)
Slider Mass	g	(lb)	4540	(10)



Item	Description	Item-No.
PS01-48x360F-C	Stator with IP67 Connector M23/9(m)	0150-1269
PL01-28x1010/930	Slider 'standard'	0150-1387

P01-48x360F/780x930

Max. Stroke: 930 mm
Peak Force: 1020 N

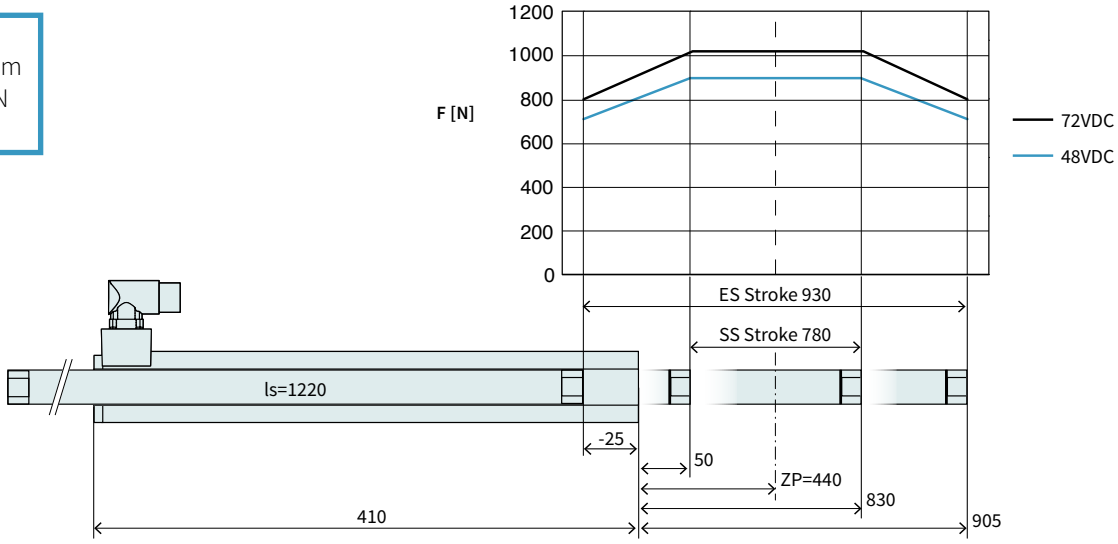

Dimensions in mm

Technical Data P01-48x360F/780x930				
Stroke				
Standard Stroke (SS)	mm	(in)	780	(30.69)
Extended Stroke (ES)	mm	(in)	930	(36.6)
Force				
Max. Force @ 48VDC	N	(lbf)	905	(204)
Max. Force @ 72VDC	N	(lbf)	1020	(230)
Max. Cont. Force [Passive cooling/ Fan / Fluid]	N	(lbf)	200 / 340 / -	(45 / 77 / -)
Max. Border Force relative	%		79	
Force Constant	N/A_{pk}	(lbf/A_{pk})	32	(7.19)
Velocity				
Max. Velocity @ 48VDC	m/s	(in/s)	1.3	(53.9)
Max. Velocity @ 72VDC	m/s	(in/s)	2	(80.9)
Position Detection				
Repeatability	mm	(in)	±0.05	(±0.002)
Linearity	%		± 0.2	
Electrical Data				
Max. Current @ 48VDC	A_{pk}		28.2	
Max. Current @ 72VDC	A_{pk}		31.9	
Max. Cont. Current [Passive cooling /Fan / Fluid]	A_{pk}		6.2 / 11 / -	
Thermal Data				
Max. Winding Temperature (Sensor)	°C		90	
Thermal Resistance [Passive cooling / Fan / Fluid]	°K/W		0.72 / 0.24 / -	
Thermal Time Constant [Passive cooling / Fan / Fluid]	s		1000 / 340 / -	
Mechanical Data				
Slider Length	mm	(in)	1220	(48)
Slider Mass	g	(lb)	5510	(12.12)



Item	Description	Item-No.
PS01-48x360F-C	Stator with IP67 Connector M23/9(m)	0150-1269
PL01-28x1220/1140	Slider 'standard'	0150-1388

P01-48x360F/960x1110

Max. Stroke: 1110 mm
Peak Force: 1020 N

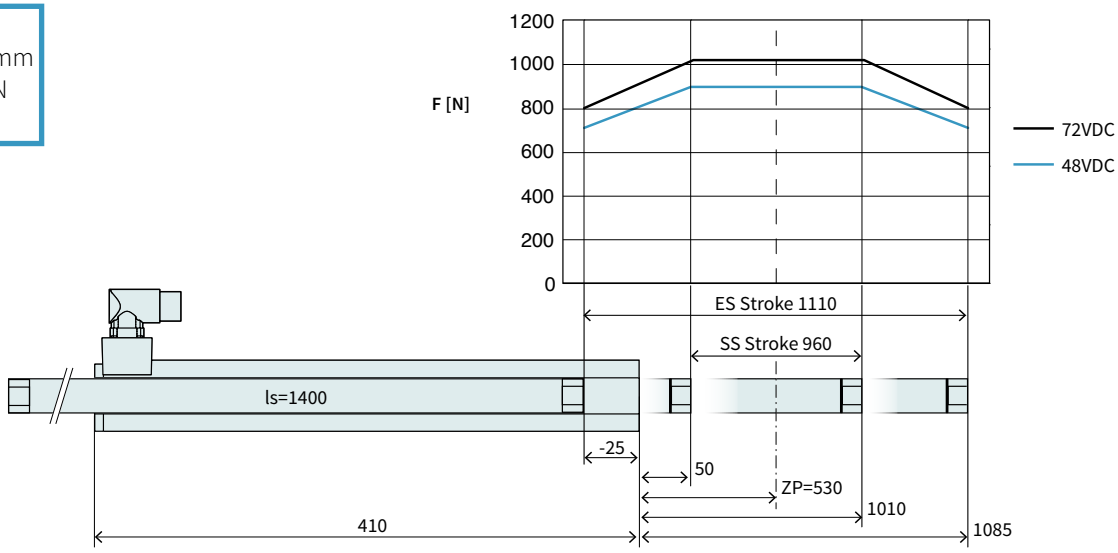

Dimensions in mm

Technical Data P01-48x360F/960x1110				
Stroke				
Standard Stroke (SS)	mm	(in)	960	(37.79)
Extended Stroke (ES)	mm	(in)	1110	(43.7)
Force				
Max. Force @ 48VDC	N	(lbf)	905	(204)
Max. Force @ 72VDC	N	(lbf)	1020	(230)
Max. Cont. Force [Passive cooling/ Fan / Fluid]	N	(lbf)	200 / 340 / -	(45 / 77 / -)
Max. Border Force relative	%		79	
Force Constant	N/A_{pk}	(lbf/A_{pk})	32	(7.19)
Velocity				
Max. Velocity @ 48VDC	m/s	(in/s)	1.3	(53.9)
Max. Velocity @ 72VDC	m/s	(in/s)	2	(80.9)
Position Detection				
Repeatability	mm	(in)	±0.05	(±0.002)
Linearity	%		± 0.15	
Electrical Data				
Max. Current @ 48VDC	A_{pk}		28.2	
Max. Current @ 72VDC	A_{pk}		31.9	
Max. Cont. Current [Passive cooling /Fan / Fluid]	A_{pk}		6.2 / 11 / -	
Thermal Data				
Max. Winding Temperature (Sensor)	°C		90	
Thermal Resistance [Passive cooling / Fan / Fluid]	°K/W		0.72 / 0.24 / -	
Thermal Time Constant [Passive cooling / Fan / Fluid]	s		1000 / 340 / -	
Mechanical Data				
Slider Length	mm	(in)	1400	(55)
Slider Mass	g	(lb)	6350	(13.97)



Item	Description	Item-No.
PS01-48x360F-C	Stator with IP67 Connector M23/9(m)	0150-1269
PL01-28x1400/1320	Slider 'standard'	0150-1389

P01-48x360F/1170x1320

Max. Stroke: 1320 mm
Peak Force: 1020 N

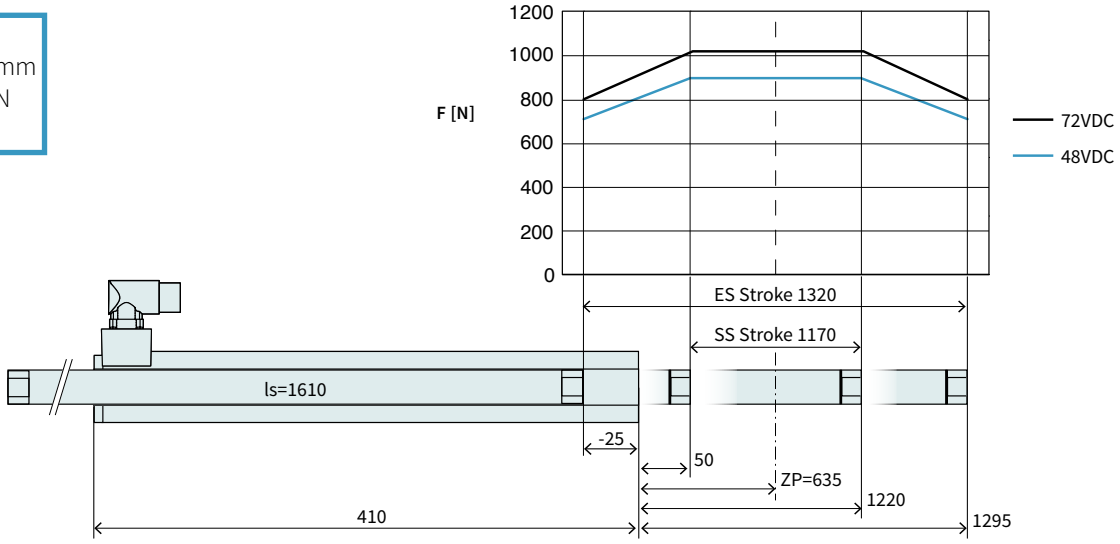

Dimensions in mm

Technical Data P01-48x360F/1170x1320				
Stroke				
Standard Stroke (SS)	mm	(in)	1170	(46.1)
Extended Stroke (ES)	mm	(in)	1320	(51.99)
Force				
Max. Force @ 48VDC	N	(lbf)	905	(204)
Max. Force @ 72VDC	N	(lbf)	1020	(230)
Max. Cont. Force [Passive cooling/ Fan / Fluid]	N	(lbf)	200 / 340 / -	(45 / 77 / -)
Max. Border Force relative	%		79	
Force Constant	N/A_{pk}	(lbf/A_{pk})	32	(7.19)
Velocity				
Max. Velocity @ 48VDC	m/s	(in/s)	1.3	(53.9)
Max. Velocity @ 72VDC	m/s	(in/s)	2	(80.9)
Position Detection				
Repeatability	mm	(in)	±0.05	(±0.002)
Linearity	%		± 0.15	
Electrical Data				
Max. Current @ 48VDC	A_{pk}		28.2	
Max. Current @ 72VDC	A_{pk}		31.9	
Max. Cont. Current [Passive cooling /Fan / Fluid]	A_{pk}		6.2 / 11 / -	
Thermal Data				
Max. Winding Temperature (Sensor)	°C		90	
Thermal Resistance [Passive cooling / Fan / Fluid]	°K/W		0.72 / 0.24 / -	
Thermal Time Constant [Passive cooling / Fan / Fluid]	s		1000 / 340 / -	
Mechanical Data				
Slider Length	mm	(in)	1610	(63)
Slider Mass	g	(lb)	7330	(16.13)



Item	Description	Item-No.
PS01-48x360F-C	Stator with IP67 Connector M23/9(m)	0150-1269
PL01-28x1610/1530	Slider 'standard'	0150-1390

P01-48x360F/1380x1530

Max. Stroke: 1530 mm
Peak Force: 1020 N

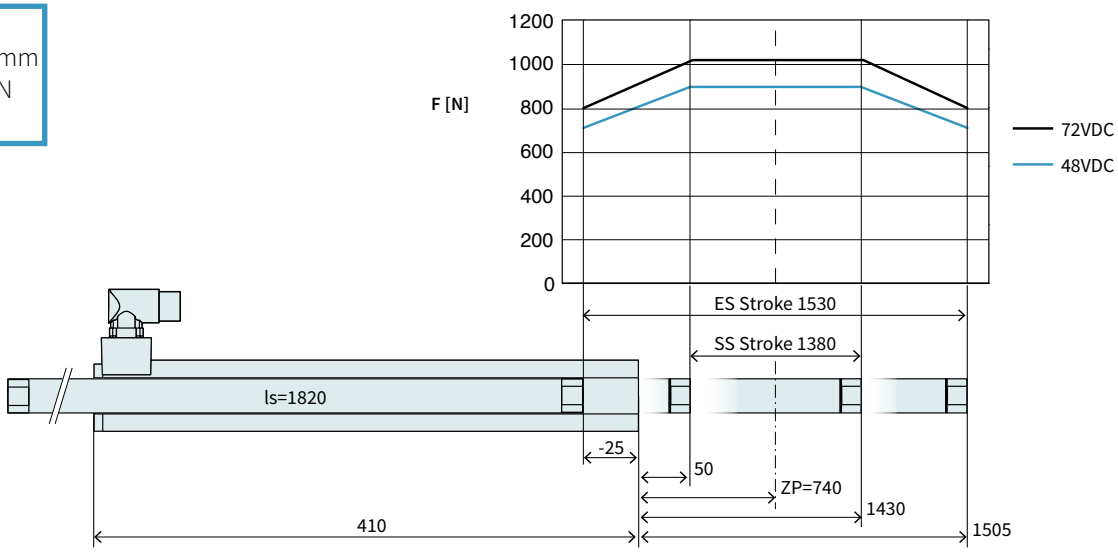

Dimensions in mm

Technical Data P01-48x360F/1380x1530				
Stroke				
Standard Stroke (SS)	mm	(in)	1380	(54.29)
Extended Stroke (ES)	mm	(in)	1530	(60.2)
Force				
Max. Force @ 48VDC	N	(lbf)	905	(204)
Max. Force @ 72VDC	N	(lbf)	1020	(230)
Max. Cont. Force [Passive cooling/ Fan / Fluid]	N	(lbf)	200 / 340 / -	(45 / 77 / -)
Max. Border Force relative	%		79	
Force Constant	N/A_{pk}	(lbf/A_{pk})	32	(7.19)
Velocity				
Max. Velocity @ 48VDC	m/s	(in/s)	1.3	(53.9)
Max. Velocity @ 72VDC	m/s	(in/s)	2	(80.9)
Position Detection				
Repeatability	mm	(in)	±0.05	(±0.002)
Linearity	%		± 0.15	
Electrical Data				
Max. Current @ 48VDC	A_{pk}		28.2	
Max. Current @ 72VDC	A_{pk}		31.9	
Max. Cont. Current [Passive cooling /Fan / Fluid]	A_{pk}		6.2 / 11 / -	
Thermal Data				
Max. Winding Temperature (Sensor)	°C		90	
Thermal Resistance [Passive cooling / Fan / Fluid]	°K/W		0.72 / 0.24 / -	
Thermal Time Constant [Passive cooling / Fan / Fluid]	s		1000 / 340 / -	
Mechanical Data				
Slider Length	mm	(in)	1820	(72)
Slider Mass	g	(lb)	8300	(18.26)



Item	Description	Item-No.
PS01-48x360F-C	Stator with IP67 Connector M23/9(m)	0150-1269
PL01-28x1820/1740	Slider 'standard'	0150-1395

P01-48x360F/1560x1710

Max. Stroke: 1710 mm
Peak Force: 1020 N

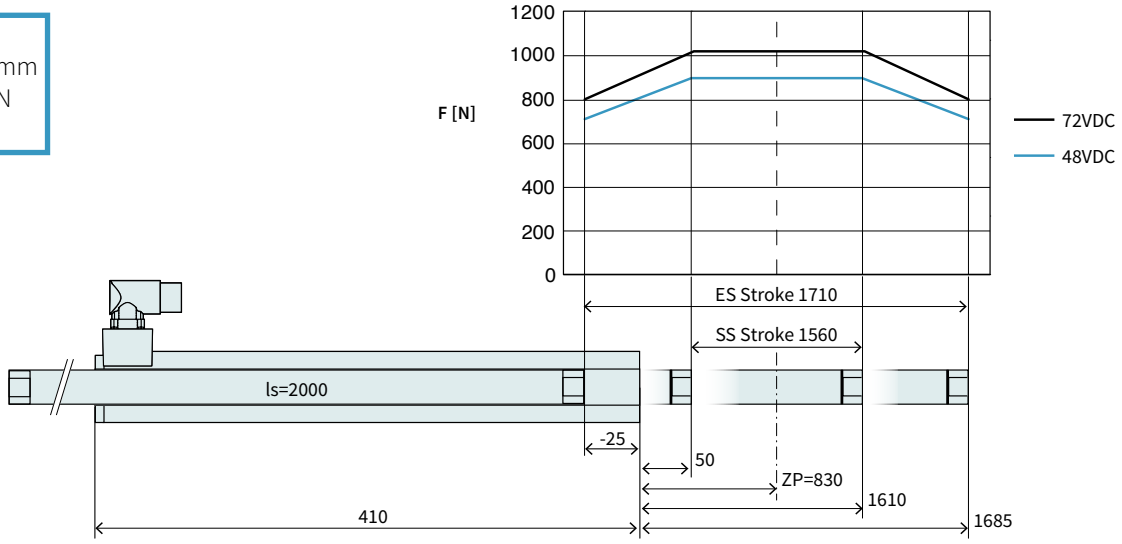

Dimensions in mm

Technical Data P01-48x360F/1560x1710				
Stroke				
Standard Stroke (SS)	mm	(in)	1560	(61.39)
Extended Stroke (ES)	mm	(in)	1710	(67.29)
Force				
Max. Force @ 48VDC	N	(lbf)	905	(204)
Max. Force @ 72VDC	N	(lbf)	1020	(230)
Max. Cont. Force [Passive cooling/ Fan / Fluid]	N	(lbf)	200 / 340 / -	(45 / 77 / -)
Max. Border Force relative	%		79	
Force Constant	N/A_{pk}	(lbf/A_{pk})	32	(7.19)
Velocity				
Max. Velocity @ 48VDC	m/s	(in/s)	1.3	(53.9)
Max. Velocity @ 72VDC	m/s	(in/s)	2	(80.9)
Position Detection				
Repeatability	mm	(in)	±0.05	(±0.002)
Linearity	%		± 0.15	
Electrical Data				
Max. Current @ 48VDC	A_{pk}		28.2	
Max. Current @ 72VDC	A_{pk}		31.9	
Max. Cont. Current [Passive cooling /Fan / Fluid]	A_{pk}		6.2 / 11 / -	
Thermal Data				
Max. Winding Temperature (Sensor)	°C		90	
Thermal Resistance [Passive cooling / Fan / Fluid]	°K/W		0.72 / 0.24 / -	
Thermal Time Constant [Passive cooling / Fan / Fluid]	s		1000 / 340 / -	
Mechanical Data				
Slider Length	mm	(in)	2000	(79)
Slider Mass	g	(lb)	9140	(20.11)



Item	Description	Item-No.
PS01-48x360F-C	Stator with IP67 Connector M23/9(m)	0150-1269
PL01-28x2000/1920	Slider 'standard'	0150-1396

3

Linear Guides H01



HM01-48x360/90	**Linear Module 48x360 with 90 mm Stroke**			
H-Guide	H01-48x370/90	H-Guide for P01-48x360, Stroke max 90 mm	0150-5240
	H01-48x370/90-GF	H-Guide for P01-48x360, Stroke max 90 mm	0150-5243
Stator	PS01-48x360F-C	Stator with IP67 Connector M23/9(m)	0150-1269
Slider	PL01-28x500/420	Slider Standard	0150-1382
HM01-48x360/210	**Linear Module 48x360 with 210 mm Stroke**		
H-Guide	H01-48x370/210	H-Guide for P01-48x360, Stroke max 210 mm	0150-5241
	H01-48x370/210-GF	H-Guide for P01-48x360, Stroke max 210 mm	0150-5244
Stator	PS01-48x360F-C	Stator with IP67 Connector M23/9(m)	0150-1269
Slider	PL01-28x620/540	Slider Standard	0150-1383
HM01-48x360/300	**Linear Module 48x360 with 300 mm Stroke**		
H-Guide	H01-48x370/300	H-Guide for P01-48x360, Stroke max 300 mm	0150-5242
	H01-48x370/300-GF	H-Guide for P01-48x360, Stroke max 300 mm	0150-5245
Stator	PS01-48x360F-C	Stator with IP67 Connector M23/9(m)	0150-1269
Slider	PL01-28x710/630	Slider Standard	0150-1383
HM01-48x360/510	**Linear Module 48x360 with 510 mm Stroke**		
H-Guide	H01-48x370/510	H-Guide for P01-48x360, Stroke max 510 mm	0150-5252
	H01-48x370/510-GF	H-Guide for P01-48x360, Stroke max 510 mm	on request
Stator	PS01-48x360F-C	Stator with IP67 Connector M23/9(m)	0150-1269
Slider	PL01-28x920/840	Slider Standard	0150-1386

Accessories			
Brake	HB01-48	Pneumatic Brake for H01-48/1000N(4-6Bar)	0150-5098
Fan	HV01-37/48	Fan cooling for H01-37/48 &PF02-37/48	0150-5051
MagSpring	MF01-37/H37	Flange MagSpring 37 / H-Guide 23/37/48	0250-2307
	MA01-37/H48	Adapter MagSpring 37 / H-Guide 48	0250-0118
Sliding block	PFN01-8/M6	Sliding block 8mm, M6 thread	0250-3245
Centering sleeve	HC01-11/05	Centering sleeve D11x5 mm	0150-3252
Wipers	HA01-48/28-F	Wiper for H01-48 guides, front side	0150-5109

FIND MORE PRODUCT DETAILS IN THE CHAPTER "LINEAR GUIDES".

Motor Cable

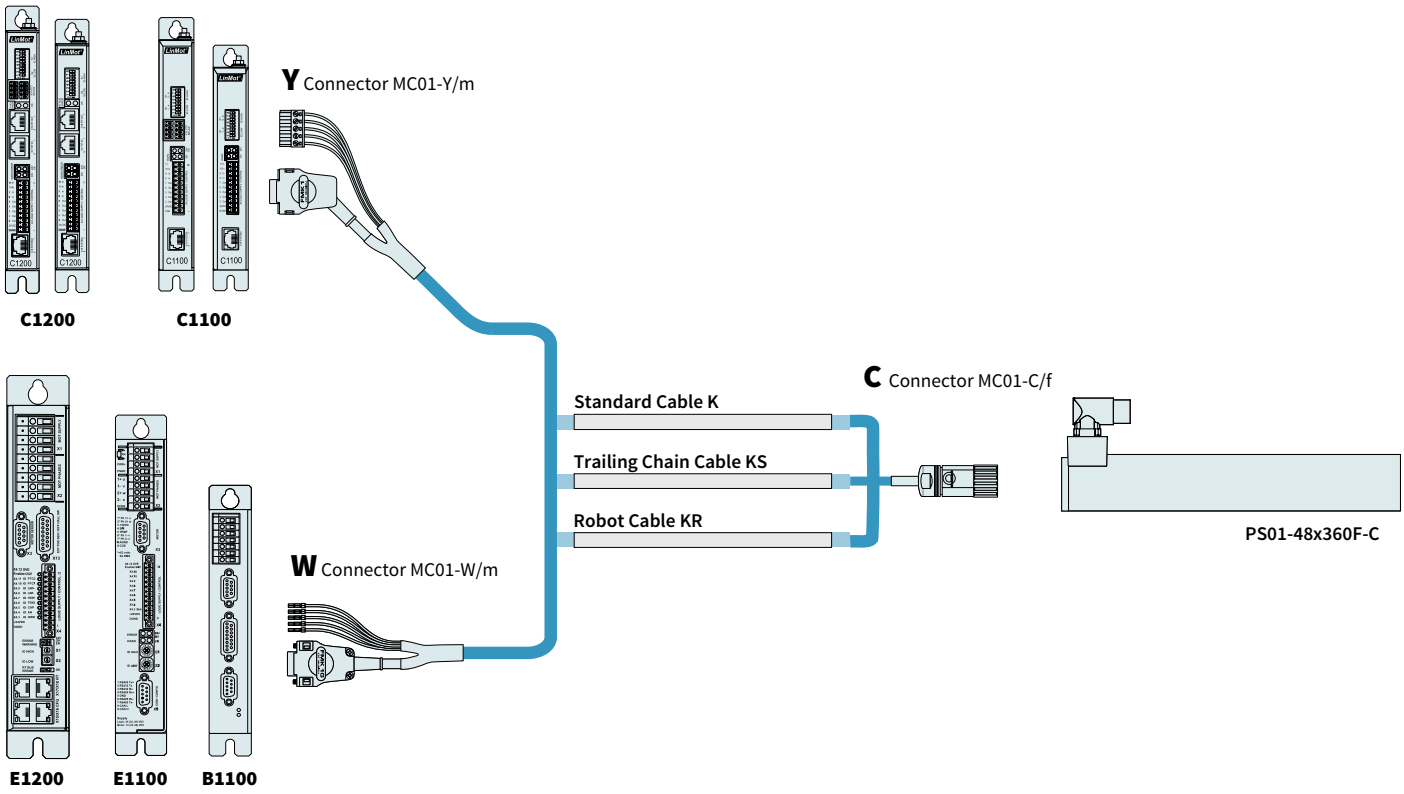

ORDERING INFORMATION

STANDARD CABLE		
Item	**Description**	**Item-No.**
K15-W/C-2	Motor Cable W/C, 2 m	0150-1811
K15-W/C-4	Motor Cable W/C, 4 m	0150-1801
K15-W/C-6	Motor Cable W/C, 6 m	0150-1802
K15-W/C-8	Motor Cable W/C, 8 m	0150-1803
K15-W/C-	Motor Cable W/C, Custom length	0150-3131
K15-Y/C-2	Motor Cable Y/R, 2 m	0150-2429
K15-Y/C-4	Motor Cable Y/R, 4 m	0150-2430
K15-Y/C-6	Motor Cable Y/R, 6 m	0150-2431
K15-Y/C-8	Motor Cable Y/R, 8 m	0150-2432
K15-Y-Fe/C-	Motor Cable Y-Fe/R, Custom length	0150-3506

TRAILING CHAIN CABLE		
Item	**Description**	**Item-No.**
KS10-W/C-4	Trailing Chain Cable W/C, 4 m	0150-1807
KS10-W/C-6	Trailing Chain Cable W/C, 6 m	0150-1858
KS10-W/C-8	Trailing Chain Cable W/C, 8 m	0150-1808
KS10-W/C-	Trailing Chain Cable W/C, Custom length	0150-3139
KS10-Y/C-4	Trailing Chain Cable Y/C, 4 m	0150-2439
KS10-Y/C-6	Trailing Chain Cable Y/C, 6 m	0150-2440
KS10-Y/C-8	Trailing Chain Cable Y/C, 8 m	0150-2441
KS10-Y/C-	Trailing Chain Cable Y-Fe/C, Custom length	0150-3511

ROBOT CABLE		
Item	**Description**	**Item-No.**
KR10-W/C-	Robot Cable KR10-W/C, Custom length	0150-3199
KR10-Y-Fe/C-	Robot Cable KR10-Y-Fe/C, Custom length	0150-3515

CONNECTOR & CABLE (INDIVIDUAL)		
Item	**Description**	**Item-No.**
MC01-W/m	Motor Connector W/m	0150-3140
MC01-Y-Fe/m	Motor Connector Y-Fe/m	0150-3289
MC01-C/f	Motor Connector C/f	0150-3080
MC01-P/f	Motor Connector P/f	0150-3021
K15-04/05	Motor Cable per m	0150-1978
KS10-04/05	Trailing Chain Cable per m	0150-1977
KR10-04/05	Robot Cable per m	0150-1830

MOTOR FLANGES



Item	Description	Item-No.
PF01-48x346	Flange 48x120 mm	0150-2145

FIND MORE PRODUCT DETAILS IN THE CHAPTER "ACCESSORIES".

FANS



Item	Description	Item-No.
HV01-37/48	Fan cooling for H01-37, B01-37 and PF02-37	0150-5051

FIND MORE PRODUCT DETAILS IN THE CHAPTER "ACCESSORIES".

SLIDER MOUNTING



Item	Description	Item-No.
PLF01-28	Fixed Bearing Set for 27 mm and 28mm Slider	0150-3087
PLF01-28-SS	Fixed Bearing Set for 27 mm and 28 mm Slider, Stainless steel	0150-3297
PLL01-27	Floating Bearing for PL01-27 Slider	0150-3294
PLL01-28	Floating Bearing for PL01-28 Slider	0150-3094
PLM01-28-MK	Mounting Kit for PL01-28 Slider	0150-3095

FIND MORE PRODUCT DETAILS IN THE CHAPTER "ACCESSORIES".

WIPERS



Item	Description	Item-No.
PA01-48/27-F	Wipers for PS01-48x...	0150-3228
PA01-48/27-R	Wipers for PS01-48x...-C	0150-3229
PA01-48/28-F	Wipers for PS01-48x...	0150-3127
PA01-48/28-R	Wipers for PS01-48x...-C	0150-3202

FIND MORE PRODUCT DETAILS IN THE CHAPTER "ACCESSORIES".

EXTERNAL POSITION SENSORS

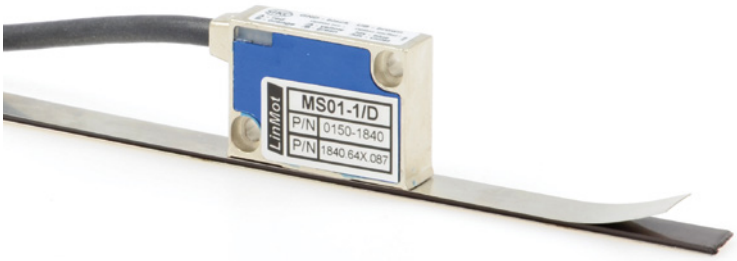

Item	Description	Item-No.
MS01-1/D	Linear Encoder 1µm, A/B (for inc. strip)	0150-1840
MB01-1000	Magnetic incremental strip for MS01-1/D, per cm	0150-1963
KS025-D/D-Encoder	Encoder Cable (Length in m)	0150-3166
KS025-D/D15-Encoder	Encoder Cable (Length in m)	0150-3168

FIND MORE PRODUCT DETAILS IN THE CHAPTER "ACCESSORIES".



Item	Description	Item-No.
MS01-1/D-SSI	Linear Encoder 1µm, A/B (for absolute strip)	0150-2095
MB01-1000-ABS	Magnetic absolute strip for MS01-1/D-SSI (per cm)	0150-2096
EC01-ABS/ENC-12-S	MS01-1/D-SSI Encoder connector straight	0150-3616
KSS01-12-D15/ABS-ENC	Special cable for MS01-1/D-SSI on C1100/C1200/C1400/E1200/E1400 Drives	0150-3652

FIND MORE PRODUCT DETAILS IN THE CHAPTER "ACCESSORIES".

LINEAR MOTORS P10



The power packages of the LinMot motor family offer the best possible flexibility in the control concept and the stroke range.

Product Description

The linear motors of the P10 series are the most powerful motors in the LinMot product family. With their higher performance and peak forces of up to 2700 N, the motors place higher demands on the drive units and servo drives. For this reason, LinMot has developed a completely new concept and relies exclusively on the 3x400VAC technology and servo drives with direct power supply from the grid for this motor series. Depending on the application, the motors can also be operated with rectified 1x230VAC.

The built-in standard encoders ensure better integration of the drives into external control concepts. The motors can thus be controlled by drives of any manufacturer without problems. As with the smaller drives, the motors are equipped with rotatable IP67 plugs. For the different stroke lengths there is a fixed, systematically ordered slider program.



P10-54 Linear Motors

Compact, tubular linear motors with medium power output for dynamic positioning tasks or to replace pneumatics. Optionally equipped with a 1Vpp sin/cos encoder or an A/B incremental encoder, the motors can be controlled by any manufacturer's drives. The P10-54 motors are available in 4 sizes, with peak forces from 350 to 900 N. The extensive selection of sliders produces a closely tiered range of strokes, with a maximum stroke of up to 2000 mm.



P10-70 Linear Motors

The most powerful LinMot motors for dynamic linear motions. They can be actuated by any manufacturer’s drives or by the LinMot E1400 Servo Drive. The 70-series motors are available in 5 sizes, with peak forces from 550 to 2700 N. The maximum available stroke is 1770 mm. The motor data, with accelerations from 975 m/s2 and a maximum speed of over 7 m/s, leave nothing to be desired in terms of dynamics.

FREELY POSITIONABLE

LinMot linear motors can be freely positioned. With absolute or relative movement commands, they can move to any desired position in the stroke range. Since the LinMot linear drive is a closed-loop system, not only the end positions are monitored, but also deviations in position during travel. This allows, among other things, precise specification of travel speeds, acceleration and braking ramps, and travel through curved paths.

HIGH AND CONTROLLED DYNAMICS

Max. acceleration values over 900 m/s^2 and travel speeds up to 10 m/s allow cyclical motion sequences of several Hertz.

For handling applications with sensitive products, such as transporting wafers in semiconductor production, very gentle, smooth motions with suitable accelerations can be obtained.

PROCESS STABILITY

Since not only the end positions, but also speed and acceleration are controlled and monitored, motions that are programmed once are carried out the same way over the entire life of the machine.

3X400 VAC TECHNOLOGY

LinMot is using 3x400VAC technology for the first time with this series of motors. This has increased the dynamism of the drives several times over, so that accelerations of well over 900 m/s² can be achieved. The three-phase alternating current allows the motors to be even better integrated in the machine environment and used more effectively as a component.

WORKS WITH THIRD-PARTY DRIVES

The P10 series of motors have been deliberately equipped with standard encoders. The position signals are output by an analog 1Vpp sin/cos sensor or by a digital A/B incremental encoder. Both types can be read by nearly all third-party drives, thus enabling optimal integration in existing control concepts. In addition to the position feedback, the outgoing temperature signals can also be interpreted by other drives without a problem. Either PTC/PT1000 or KTY sensors are installed for this purpose.

PLUGS FOR SENSORS AND POWER

Every designer is familiar with the problem of routing motor cables inside machinery. For this reason, LinMot Series P10 linear motors are available with two separate, robust, rotating plug connections with IP67 protection for signals and for power.

SYNCHRONIZATION

For synchronous machines, the linear motor can be synchronized to the main shaft. By replacing mechanical cam discs with LinMot linear motors, for example, great variations can be achieved, with format changeovers at the push of a button.

OVERLOAD PROTECTION

There are no mechanical components for force transfer that could be damaged in a crash or stall condition in a linear motor. Complex, expensive designs to protect gearboxes, gears, and shafts are thus eliminated.

If the linear motor stalls, it acts like a pneumatic cylinder and tries to reach the target position with maximum force. The following error monitor in the drive can, however, immediately recognize a stall condition. Temperature sensors integrated in the stator prevent the drive from overloading in any case.

LONG LIFESPAN

Since the linear motion is generated purely magnetically, and no mechanical force transmission takes place, even extremely dynamic applications can be implemented with a long lifespan.

Type Code

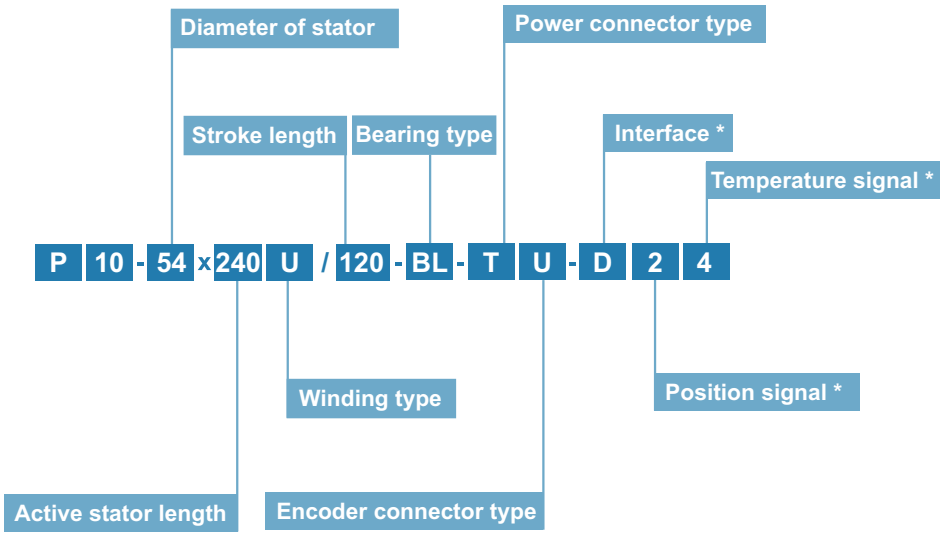

For explanations of the terms, please refer to the section "Glossary".

* = Only for motors for 3rd party drives

LINEAR MOTORS P10-54x120U



- 230VAC and 3 x 400VAC technology
- Peak forces up to 335 N
- LinMot Encoder or Incremental Encoder
- Extremely high dynamic
- Rotating push-pull TWIN connector for power and encoder cables
- Can also be controlled by standard third-party servo drives

4

LINEAR MOTORS P10-54x120U

Technical Data ____ **397**

Motor Specifications

P10-54x120U/70 ..... **402**
P10-54x120U/130 ..... **403**
P10-54x120U/220 ..... **404**
P10-54x120U/340 ..... **405**
P10-54x120U/430 ..... **406**
P10-54x120U/520 ..... **407**
P10-54x120U/640 ..... **408**
P10-54x120U/730 ..... **409**
P10-54x120U/940 ..... **410**
P10-54x120U/1120 ..... **411**
P10-54x120U/1330 ..... **412**
P10-54x120U/1540 ..... **413**
P10-54x120U/1720 ..... **414**

Accessories ____ **415**



MOTOR FAMILY P10-54x120U

Technical Data				
Stroke				
Max. Stroke (ES)	mm	(in)	1720	(67.7)
Force				
Max. Force @ 1x230VAC	N	(lbf)	335	(75.4)
Max. Force @ 3x400VAC	N	(lbf)	335	(75.4)
Max. Cont. Force [Passive cooling/ Fan / Fluid]	N	(lbf)	60 / 81 / 110	(14 / 18 / 25)
Max. Border Force relative	%		100	
Force Constant 1	N/A_{pk}	(lbf/A_{pk})	43	(9.67)
Force Constant 2	N/A_{rms}	(lbf/A_{rms})	60.8	(13.7)
Velocity				
Max. Velocity @ 1x230VAC	m/s	(in/s)	4.2	(169.9)
Max. Velocity @ 3x400VAC	m/s	(in/s)	7.3	(289.9)
Position Detection				
Position Resolution	mm	(in)	0.007	(0.0003)
Repeatability	mm	(in)	±0.05	(±0.002)
Position Resolution with ES	mm	(in)	0.001	(0.00004)
Repeatability with ES	mm	(in)	±0.01	(±0.0004)
Linearity with ES	mm	(in)	±0.01	(±0.0004)
Electrical Data				
Max. Current @ 1x230VAC	A_{pk} / A_{rms}		7.7 / 5.5	
Max. Current @ 3x400VAC	A_{pk} / A_{rms}		7.7 / 5.5	
Max. Cont. Current 1 [Passive cooling /Fan / Fluid]	A_{pk}		1.4 / 1.9 / 2.6	
Max. Cont. Current 2 [Passive cooling /Fan / Fluid]	A_{rms}		0.99 / 1.3 / 1.8	
Back EMF Constant	V_{pk} / (m/s)	(V_{pk} / (in/s))	49.7	(1.26)
Terminal Resistance 25 °C / 120 °C	Ohm		14 / 19	
Terminal Inductivity	mH		11	
Magnetic Period	mm	(in)	60	(2.35)
Thermal Data				
Max. Winding Temperature (Sensor)	°C		90	
Thermal Resistance [Passive cooling / Fan / Fluid]	°K/W		2.1 / 1.2 / 0.62	
Thermal Time Constant [Passive cooling / Fan / Fluid]	s		1100 / 600 / 310	
Mechanical Data				
Stator Diameter	mm	(in)	54	(2.1)
Stator Length	mm	(in)	222	(8.7)
Stator Mass	g	(lb)	1730	(3.8)
Slider Diameter	mm	(in)	28	(1.1)
Slider Length	mm	(in)	350 - 2000	(14 - 79)
Slider Mass	g	(lb)	1460 - 9140	(3.21 - 20.1)
IP Code			IP 65	

STATOR

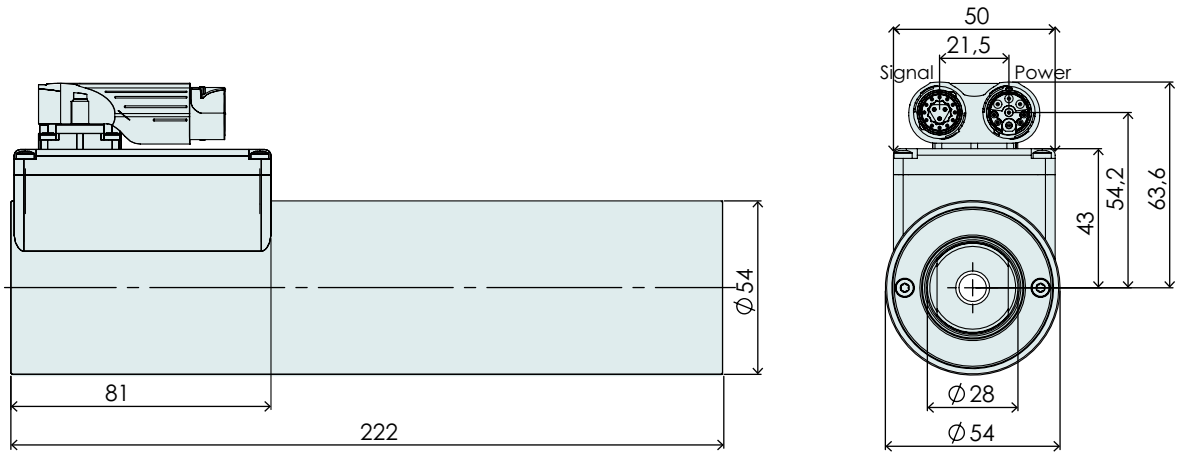

Item	Description	Item-No.
PS10-54x120U-BL-TU	Stator 3x400VAC, LinMot Encoder	0150-2722
PS10-54x120U-BL-TU-D24	Stator 3x400VAC, A/B Encoder, Pt1000	0150-2748
PS10-54x120U-BL-TU-D25	Stator 3x400VAC, A/B Encoder, PTC	0150-2752
PS10-54x120U-BL-TU-D25S	Stator 3x400VAC, A/B Encoder 5um, PTC	0150-2782

CONNECTOR PS10-54x120U-BL-TU

Motor Connector Wiring		Connector Encoder Uk	Wire Color Motor Cable
+Vcc	Supply	1	red
GND	Supply	2	black
Sin+	Encoder	3	yellow
Sin-	Encoder	4	orange
Cos+	Encoder	5	green
Cos-	Encoder	6	blue
Mot. Link C+	Communication	7	pink
Mot. Link C-	Communication	8	grey
n. c.	n. c.	9	n. c.
n. c.	n. c.	10	n. c.
n. c.	n. c.	11	n. c.
n. c.	n. c.	12	n. c.
n. c.	n. c.	A	n. c.
n. c.	n. c.	B	n. c.
n. c.	n. c.	C	n. c.

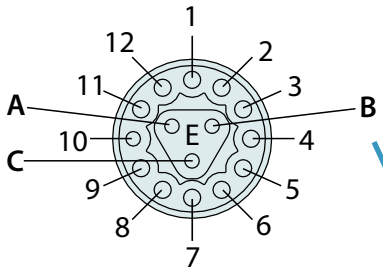

Connector Encoder Uk

View: Motor connector, plug side

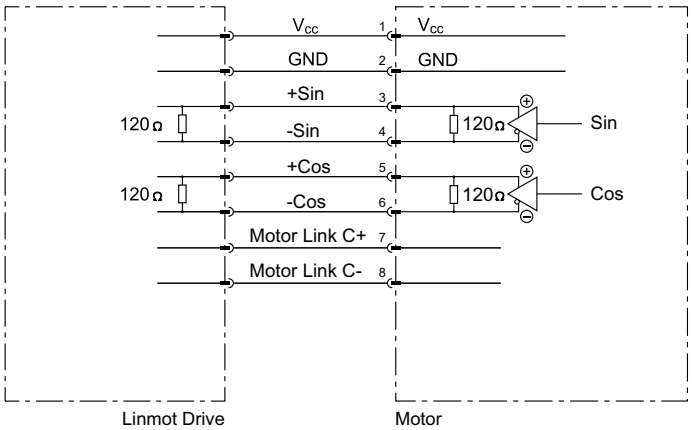

Motor Connector Wiring	Connector Power Tk	Wire Color Motor Cable
Phase U	A	red
PE	PE	yellow-green
Phase V	B	blue
Phase W	C	green
n. c.	1	n. c.
n. c.	2	n. c.
n. c.	3	n. c.
n. c.	4	n. c.
n. c.	5	n. c.

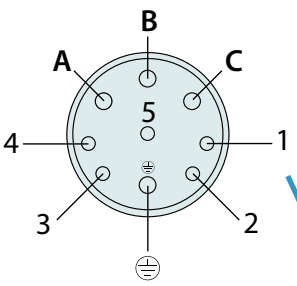

Connector Power Tk

View: Motor connector, plug side

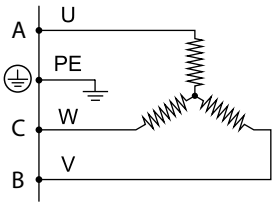

CONNECTOR PS10-54x120U-BL-TU-D24 / 25 / 25S

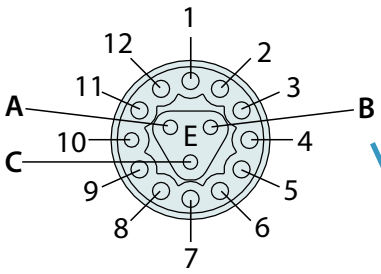

Connector Encoder Uk

View: Motor connector, plug side

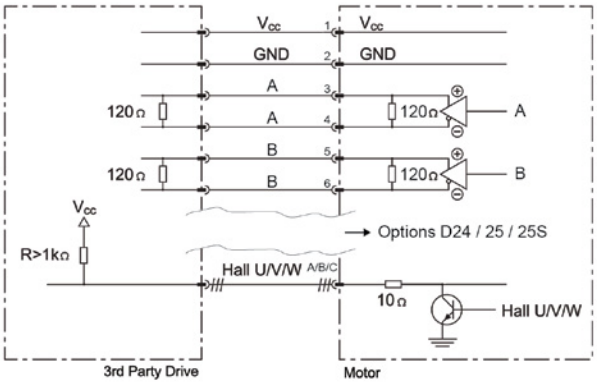

PS10-54x120U-BL-TU-D24

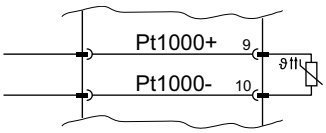

Pt1000 Characteristic emulated

PS10-54x120U-BL-TU-D25
PS10-54x120U-BL-TU-D25S

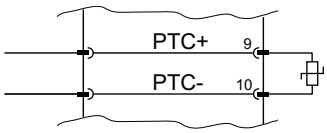

PTC (switching type)
350 Ω / 18 kΩ emulated[1]

Motor Connector Wiring				
PS10-54x120U-BL-TU-D24	PS10-54x120U-BL-TU-D25 PS10-54x120U-BL-TU-D25S	Function	Connector Encoder Uk	Wire Color Motor Cable
+Vcc	+Vcc	Supply	1	white
GND	GND	Supply	2	brown
A	A	Encoder	3	grey
/ A	/ A	Encoder	4	pink
B	B	Encoder	5	blue
/ B	/ B	Encoder	6	red
–	–	–	7	green (do not connect)
–	–	–	8	yellow (do not connect)
Pt1000+	PTC+	Temp.[2]	9	yellow-brown
Pt1000-	PTC-	Temp.[2]	10	white-yellow
REF+	REF+	Encoder	11	black
REF-	REF-	Encoder	12	purple
Hall U	Hall U	Encoder	A	grey-red
Hall V	Hall V	Encoder	B	red-blue
Hall W	Hall W	Encoder	C	white-green

1) under 350 Ω = no fault, over 18 kΩ = Fault
2) The temperature evaluation circiut must be powered from the encoder supply and must be at the same potential.
The grounds of the temperature evaluation circuit and the encoder have to be connected. The encoder must have been powered on for at least 50 ms, before valid temperatures can be measured. If the encoder is powered off, 20k Ohms are measured between Pins 9 and 10.

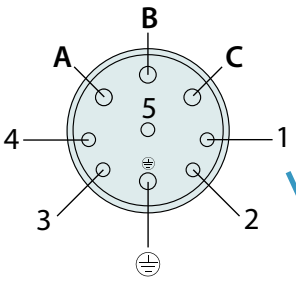

Connector Power Tk

View: Motor connector, plug side

PS10-54x120U-BL-TU-D24

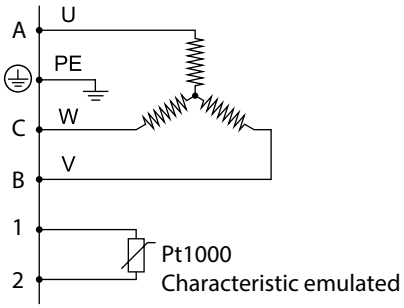

PS10-54x120U-BL-TU-D25
PS10-54x120U-BL-TU-D25S

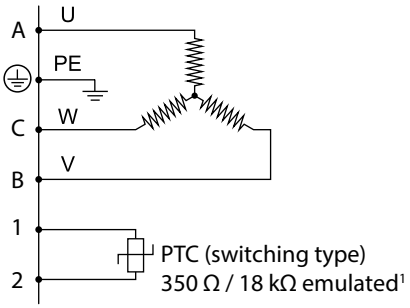

Motor Connector Wiring			
PS10-54x120U-BL-TU-D24	PS10-54x120U-BL-TU-D25 PS10-54x120U-BL-TU-D25S	Connector Power Tk	Wire Color Motor Cable
Phase U	Phase U	A	red
PE	PE	PE	yellow-green
Phase V	Phase V	B	blue
Phase W	Phase W	C	green
Pt1000+	PTC+	1	turquoise
Pt1000-	PTC-	2	grey
n. c.	n. c.	3	n. c.
n. c.	n. c.	4	n. c.
n. c.	n. c.	5	n. c.

1) under 350 Ω = no fault, over 18 Ω = Fault

SLIDER

Slider Standard

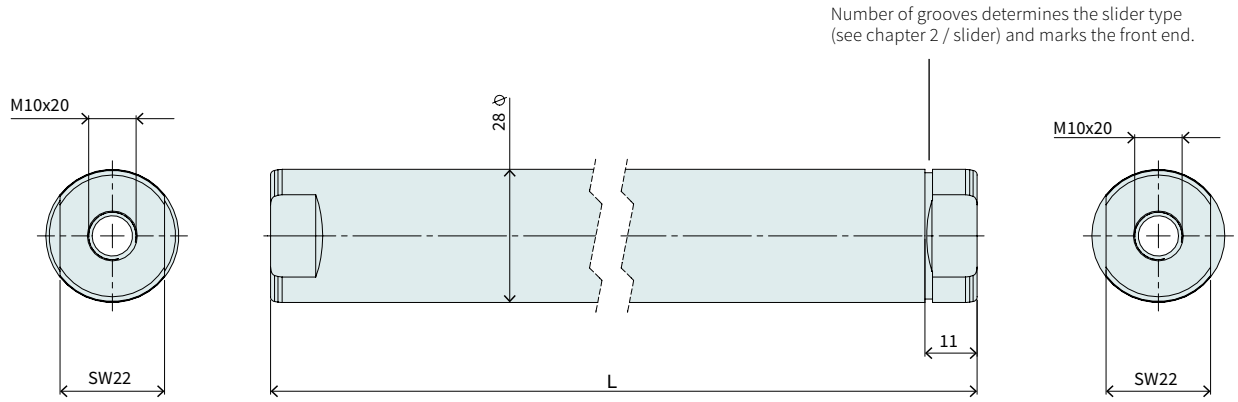

Slider Standard			
Item	**Description**	**Max. Stroke [mm]**	**Item-No.**
PL01-28x350/270	Slider 'standard'	70	0150-1380
PL01-28x410/330	Slider 'standard'	130	0150-1381
PL01-28x500/420	Slider 'standard'	220	0150-1382
PL01-28x620/540	Slider 'standard'	340	0150-1383
PL01-28x710/630	Slider 'standard'	430	0150-1384
PL01-28x800/720	Slider 'standard'	520	0150-1385
PL01-28x920/840	Slider 'standard'	640	0150-1386
PL01-28x1010/930	Slider 'standard'	730	0150-1387
PL01-28x1220/1140	Slider 'standard'	940	0150-1388
PL01-28x1400/1320	Slider 'standard'	1120	0150-1389
PL01-28x1610/1530	Slider 'standard'	1330	0150-1390
PL01-28x1820/1740	Slider 'standard'	1540	0150-1395
PL01-28x2000/1920	Slider 'standard'	1720	0150-1396

P10-54x120U/70-BL-TU

4

Max. Stroke: 70 mm
Peak Force: 335 N

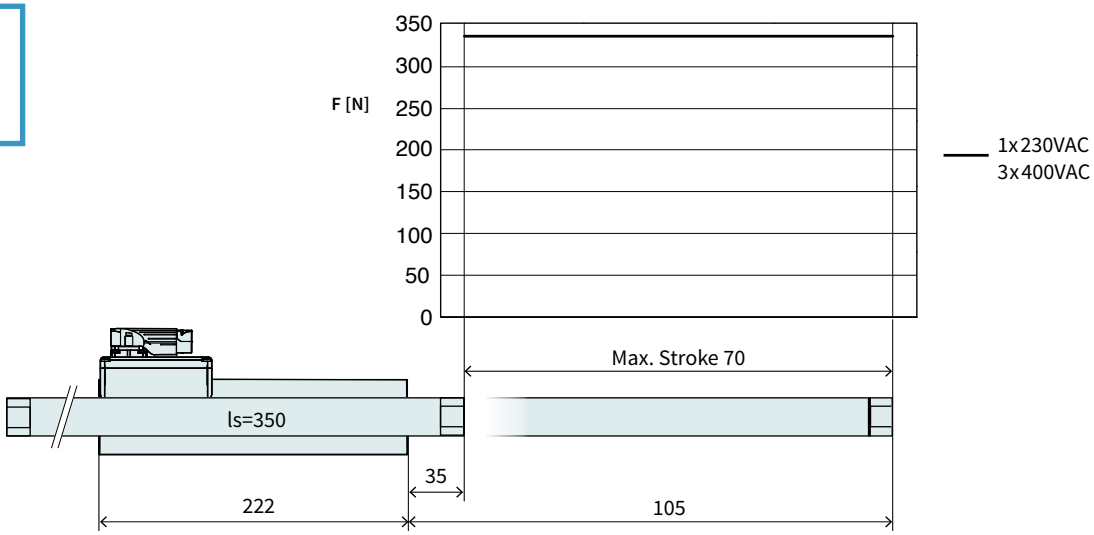

Dimensions in mm

Technical Data P10-54x120U/70				
Stroke				
Max. Stroke	mm	(in)	70	(2.75)
Force				
Max. Force @ 1x230VAC	N	(lbf)	335	(75.4)
Max. Force @ 3x400VAC	N	(lbf)	335	(75.4)
Max. Cont. Force [Passive cooling/ Fan / Fluid]	N	(lbf)	60 / 81 / 110	(14 / 18 / 25)
Max. Border Force relative	%		100	
Force Constant 1	N/A_{pk}	(lbf/A_{pk})	43	(9.67)
Force Constant 2	N/A_{rms}	(lbf/A_{rms})	60.8	(13.7)
Velocity				
Max. Velocity @ 1x230VAC	m/s	(in/s)	4.2	(169.9)
Max. Velocity @ 3x400VAC	m/s	(in/s)	7.3	(7.3)
Position Detection				
Repeatability	mm	(in)	±0.05	(±0.002)
Linearity	%		± 1.15	
Electrical Data				
Max. Current @ 1x230VAC	A_{pk} / A_{rms}		7.7 / 5.5	
Max. Current @ 3x400VAC	A_{pk} / A_{rms}		7.7 / 5.5	
Max. Cont. Current 1 [Passive cooling /Fan / Fluid]	A_{pk}		1.4 / 1.9 / 2.6	
Max. Cont. Current 2 [Passive cooling /Fan / Fluid]	A_{rms}		0.99 / 1.3 / 1.8	
Thermal Data				
Max. Winding Temperature (Sensor)	°C		90	
Thermal Resistance [Passive cooling / Fan / Fluid]	°K/W		2.1 / 1.2 / 0.62	
Thermal Time Constant [Passive cooling / Fan / Fluid]	s		1100 / 600 / 310	
Mechanical Data				
Slider Length	mm	(in)	350	(14)
Slider Mass	g	(lb)	1460	(3.21)

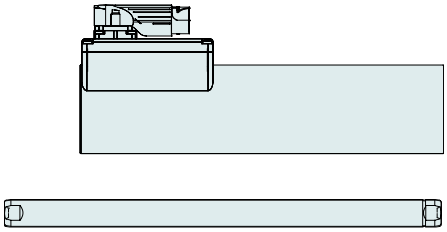

Item	Description	Item-No.
PS10-54x120U-BL-TU	Stator 3x400VAC, LinMot Encoder	0150-2722
PS10-54x120U-BL-TU-D24	Stator 3x400VAC, A/B Encoder, Pt1000	0150-2748
PS10-54x120U-BL-TU-D25	Stator 3x400VAC, A/B Encoder, PTC	0150-2752
PS10-54x120U-BL-TU-D25S	Stator 3x400VAC, A/B Encoder 5um, PTC	0150-2782
PL01-28x350/270	Slider 'standard'	0150-1380

P10-54x120U/130-BL-TU

Max. Stroke: 130 mm
Peak Force: 335 N

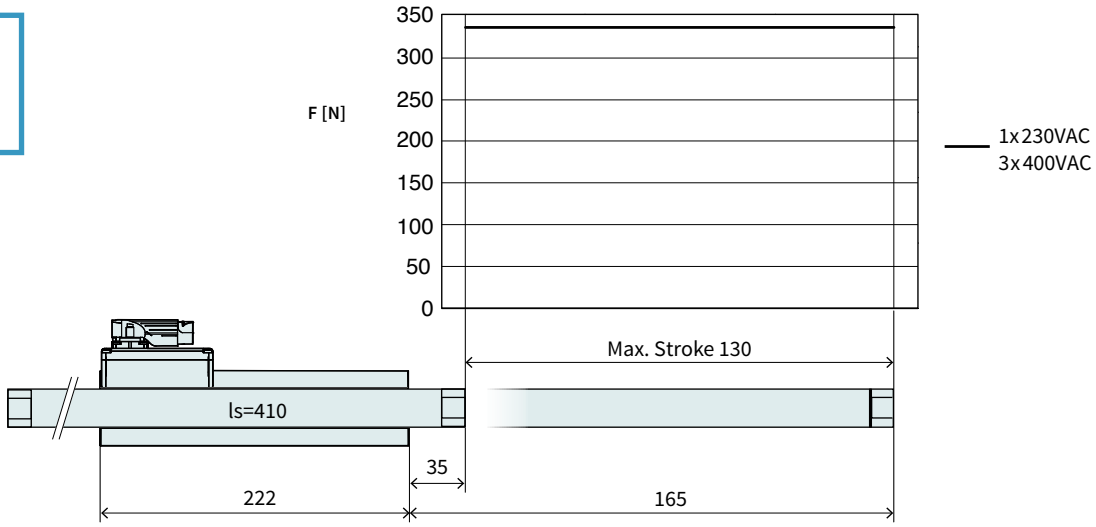

Dimensions in mm

Technical Data P10-54x120U/130				
Stroke				
Max. Stroke	mm	(in)	130	(5.12)
Force				
Max. Force @ 1x230VAC	N	(lbf)	335	(75.4)
Max. Force @ 3x400VAC	N	(lbf)	335	(75.4)
Max. Cont. Force [Passive cooling/ Fan / Fluid]	N	(lbf)	60 / 81 / 110	(14 / 18 / 25)
Max. Border Force relative	%		100	
Force Constant 1	N/A_{pk}	(lbf/A_{pk})	43	(9.67)
Force Constant 2	N/A_{rms}	(lbf/A_{rms})	60.8	(13.7)
Velocity				
Max. Velocity @ 1x230VAC	m/s	(in/s)	4.2	(169.9)
Max. Velocity @ 3x400VAC	m/s	(in/s)	7.3	(7.3)
Position Detection				
Repeatability	mm	(in)	±0.05	(±0.002)
Linearity	%		± 0.7	
Electrical Data				
Max. Current @ 1x230VAC	A_{pk} / A_{rms}		7.7 / 5.5	
Max. Current @ 3x400VAC	A_{pk} / A_{rms}		7.7 / 5.5	
Max. Cont. Current 1 [Passive cooling /Fan / Fluid]	A_{pk}		1.4 / 1.9 / 2.6	
Max. Cont. Current 2 [Passive cooling /Fan / Fluid]	A_{rms}		0.99 / 1.3 / 1.8	
Thermal Data				
Max. Winding Temperature (Sensor)	°C		90	
Thermal Resistance [Passive cooling / Fan / Fluid]	°K/W		2.1 / 1.2 / 0.62	
Thermal Time Constant [Passive cooling / Fan / Fluid]	s		1100 / 600 / 310	
Mechanical Data				
Slider Length	mm	(in)	410	(16)
Slider Mass	g	(lb)	1740	(3.83)

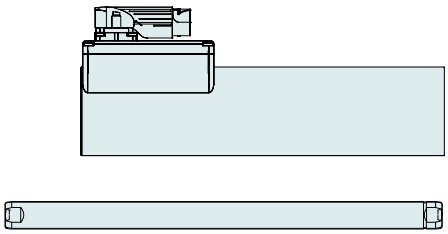

Item	Description	Item-No.
PS10-54x120U-BL-TU	Stator 3x400VAC, LinMot Encoder	0150-2722
PS10-54x120U-BL-TU-D24	Stator 3x400VAC, A/B Encoder, Pt1000	0150-2748
PS10-54x120U-BL-TU-D25	Stator 3x400VAC, A/B Encoder, PTC	0150-2752
PS10-54x120U-BL-TU-D25S	Stator 3x400VAC, A/B Encoder 5um, PTC	0150-2782
PL01-28x410/330	Slider 'standard'	0150-1381

P10-54x120U/220-BL-TU

Max. Stroke: 220 mm
Peak Force: 335 N

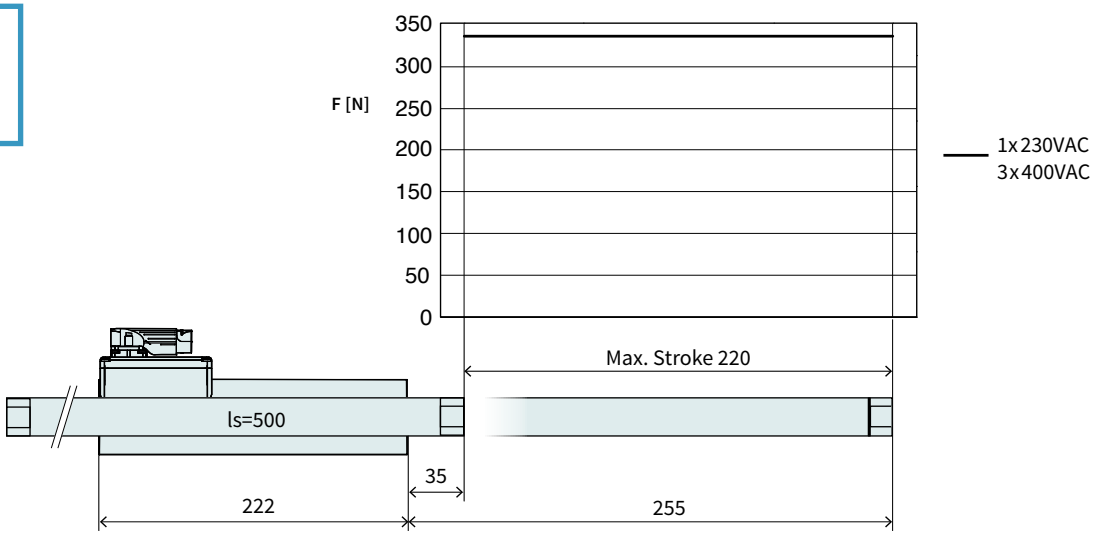

Dimensions in mm

Technical Data P10-54x120U/220				
Stroke				
Max. Stroke	mm	(in)	220	(8.65)
Force				
Max. Force @ 1x230VAC	N	(lbf)	335	(75.4)
Max. Force @ 3x400VAC	N	(lbf)	335	(75.4)
Max. Cont. Force [Passive cooling/ Fan / Fluid]	N	(lbf)	60 / 81 / 110	(14 / 18 / 25)
Max. Border Force relative	%		100	
Force Constant 1	N/A_{pk}	(lbf/A_{pk})	43	(9.67)
Force Constant 2	N/A_{rms}	(lbf/A_{rms})	60.8	(13.7)
Velocity				
Max. Velocity @ 1x230VAC	m/s	(in/s)	4.2	(169.9)
Max. Velocity @ 3x400VAC	m/s	(in/s)	7.3	(7.3)
Position Detection				
Repeatability	mm	(in)	±0.05	(±0.002)
Linearity	%		± 0.45	
Electrical Data				
Max. Current @ 1x230VAC	A_{pk} / A_{rms}		7.7 / 5.5	
Max. Current @ 3x400VAC	A_{pk} / A_{rms}		7.7 / 5.5	
Max. Cont. Current 1 [Passive cooling /Fan / Fluid]	A_{pk}		1.4 / 1.9 / 2.6	
Max. Cont. Current 2 [Passive cooling /Fan / Fluid]	A_{rms}		0.99 / 1.3 / 1.8	
Thermal Data				
Max. Winding Temperature (Sensor)	°C		90	
Thermal Resistance [Passive cooling / Fan / Fluid]	°K/W		2.1 / 1.2 / 0.62	
Thermal Time Constant [Passive cooling / Fan / Fluid]	s		1100 / 600 / 310	
Mechanical Data				
Slider Length	mm	(in)	500	(20)
Slider Mass	g	(lb)	2160	(4.75)

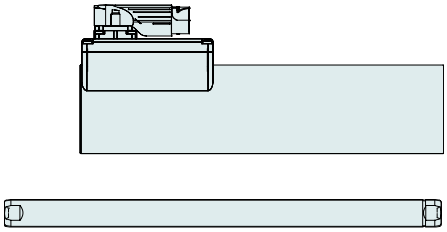

Item	Description	Item-No.
PS10-54x120U-BL-TU	Stator 3x400VAC, LinMot Encoder	0150-2722
PS10-54x120U-BL-TU-D24	Stator 3x400VAC, A/B Encoder, Pt1000	0150-2748
PS10-54x120U-BL-TU-D25	Stator 3x400VAC, A/B Encoder, PTC	0150-2752
PS10-54x120U-BL-TU-D25S	Stator 3x400VAC, A/B Encoder 5um, PTC	0150-2782
PL01-28x500/420	Slider 'standard'	0150-1382

P10-54x120U/340-BL-TU

Max. Stroke: 340 mm
Peak Force: 335 N

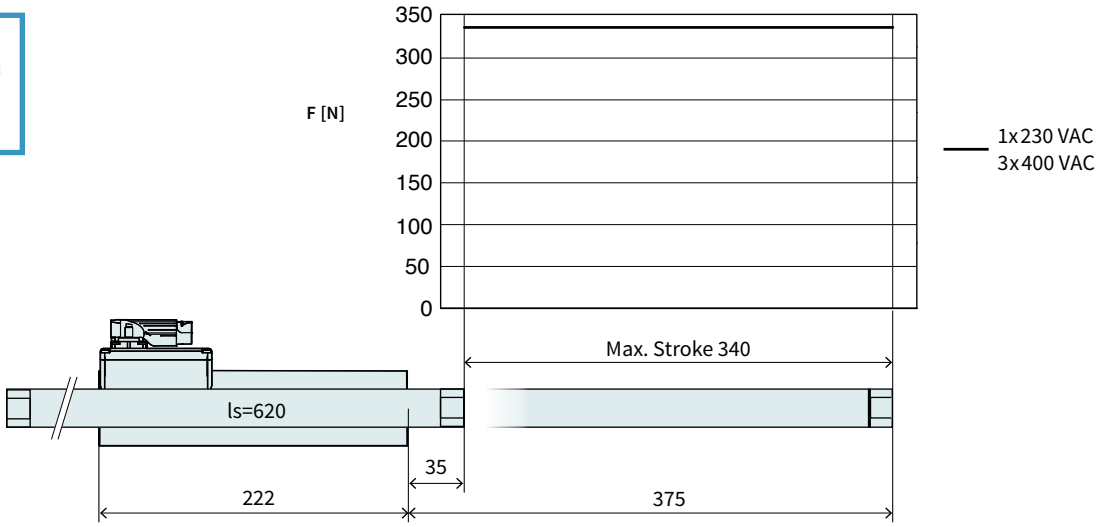

Dimensions in mm

Technical Data P10-54x120U/340				
Stroke				
Max. Stroke	mm	(in)	340	(13.4)
Force				
Max. Force @ 1x230VAC	N	(lbf)	335	(75.4)
Max. Force @ 3x400VAC	N	(lbf)	335	(75.4)
Max. Cont. Force [Passive cooling/ Fan / Fluid]	N	(lbf)	60 / 81 / 110	(14 / 18 / 25)
Max. Border Force relative	%		100	
Force Constant 1	N/A_{pk}	(lbf/A_{pk})	43	(9.67)
Force Constant 2	N/A_{rms}	(lbf/A_{rms})	60.8	(13.7)
Velocity				
Max. Velocity @ 1x230VAC	m/s	(in/s)	4.2	(169.9)
Max. Velocity @ 3x400VAC	m/s	(in/s)	7.3	(7.3)
Position Detection				
Repeatability	mm	(in)	±0.05	(±0.002)
Linearity	%		± 0.3	
Electrical Data				
Max. Current @ 1x230VAC	A_{pk} / A_{rms}		7.7 / 5.5	
Max. Current @ 3x400VAC	A_{pk} / A_{rms}		7.7 / 5.5	
Max. Cont. Current 1 [Passive cooling /Fan / Fluid]	A_{pk}		1.4 / 1.9 / 2.6	
Max. Cont. Current 2 [Passive cooling /Fan / Fluid]	A_{rms}		0.99 / 1.3 / 1.8	
Thermal Data				
Max. Winding Temperature (Sensor)	°C		90	
Thermal Resistance [Passive cooling / Fan / Fluid]	°K/W		2.1 / 1.2 / 0.62	
Thermal Time Constant [Passive cooling / Fan / Fluid]	s		1100 / 600 / 310	
Mechanical Data				
Slider Length	mm	(in)	620	(24)
Slider Mass	g	(lb)	2720	(5.98)

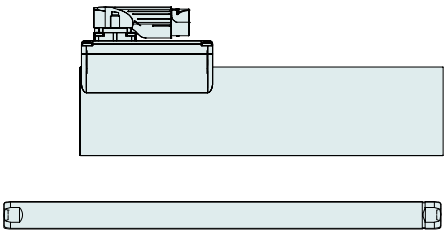

Item	Description	Item-No.
PS10-54x120U-BL-TU	Stator 3x400VAC, LinMot Encoder	0150-2722
PS10-54x120U-BL-TU-D24	Stator 3x400VAC, A/B Encoder, Pt1000	0150-2748
PS10-54x120U-BL-TU-D25	Stator 3x400VAC, A/B Encoder, PTC	0150-2752
PS10-54x120U-BL-TU-D25S	Stator 3x400VAC, A/B Encoder 5um, PTC	0150-2782
PL01-28x620/540	Slider 'standard'	0150-1383

P10-54x120U/430-BL-TU

Max. Stroke: 430 mm
Peak Force: 335 N

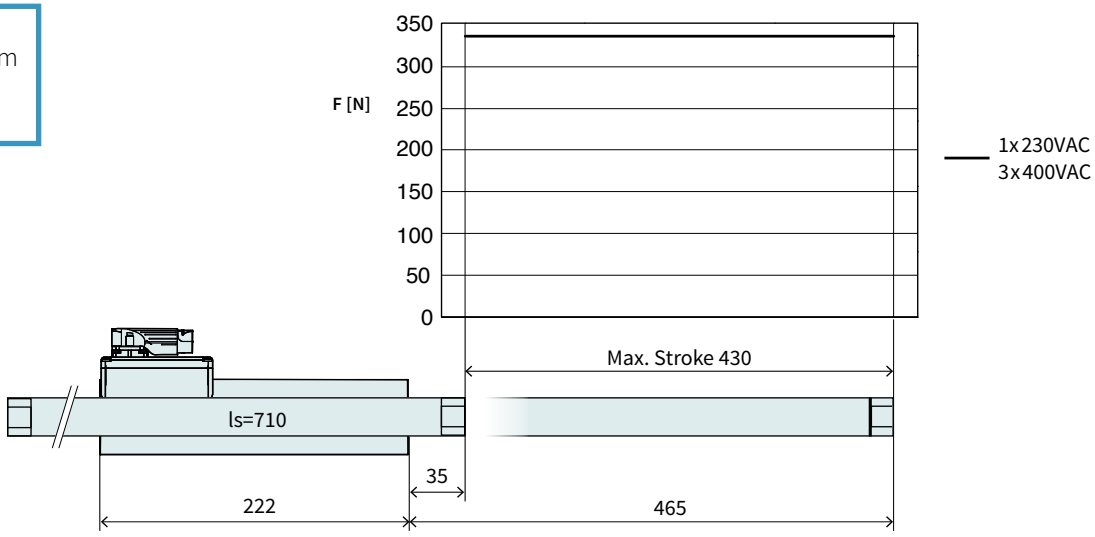

Dimensions in mm

Technical Data P10-54x120U/430				
Stroke				
Max. Stroke	mm	(in)	430	(16.89)
Force				
Max. Force @ 1x230VAC	N	(lbf)	335	(75.4)
Max. Force @ 3x400VAC	N	(lbf)	335	(75.4)
Max. Cont. Force [Passive cooling/ Fan / Fluid]	N	(lbf)	60 / 81 / 110	(14 / 18 / 25)
Max. Border Force relative	%		100	
Force Constant 1	N/A_{pk}	(lbf/A_{pk})	43	(9.67)
Force Constant 2	N/A_{rms}	(lbf/A_{rms})	60.8	(13.7)
Velocity				
Max. Velocity @ 1x230VAC	m/s	(in/s)	4.2	(169.9)
Max. Velocity @ 3x400VAC	m/s	(in/s)	7.3	(7.3)
Position Detection				
Repeatability	mm	(in)	±0.05	(±0.002)
Linearity	%		± 0.25	
Electrical Data				
Max. Current @ 1x230VAC	A_{pk} / A_{rms}		7.7 / 5.5	
Max. Current @ 3x400VAC	A_{pk} / A_{rms}		7.7 / 5.5	
Max. Cont. Current 1 [Passive cooling /Fan / Fluid]	A_{pk}		1.4 / 1.9 / 2.6	
Max. Cont. Current 2 [Passive cooling /Fan / Fluid]	A_{rms}		0.99 / 1.3 / 1.8	
Thermal Data				
Max. Winding Temperature (Sensor)	°C		90	
Thermal Resistance [Passive cooling / Fan / Fluid]	°K/W		2.1 / 1.2 / 0.62	
Thermal Time Constant [Passive cooling / Fan / Fluid]	s		1100 / 600 / 310	
Mechanical Data				
Slider Length	mm	(in)	710	(28)
Slider Mass	g	(lb)	3140	(6.91)

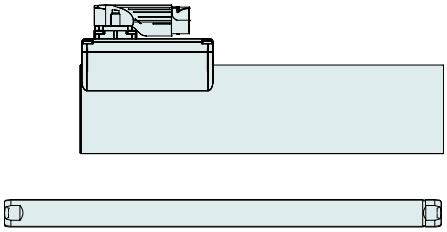

Item	Description	Item-No.
PS10-54x120U-BL-TU	Stator 3x400VAC, LinMot Encoder	0150-2722
PS10-54x120U-BL-TU-D24	Stator 3x400VAC, A/B Encoder, Pt1000	0150-2748
PS10-54x120U-BL-TU-D25	Stator 3x400VAC, A/B Encoder, PTC	0150-2752
PS10-54x120U-BL-TU-D25S	Stator 3x400VAC, A/B Encoder 5um, PTC	0150-2782
PL01-28x710/630	Slider 'standard'	0150-1384

P10-54x120U/520-BL-TU

Max. Stroke: 520 mm
Peak Force: 335 N

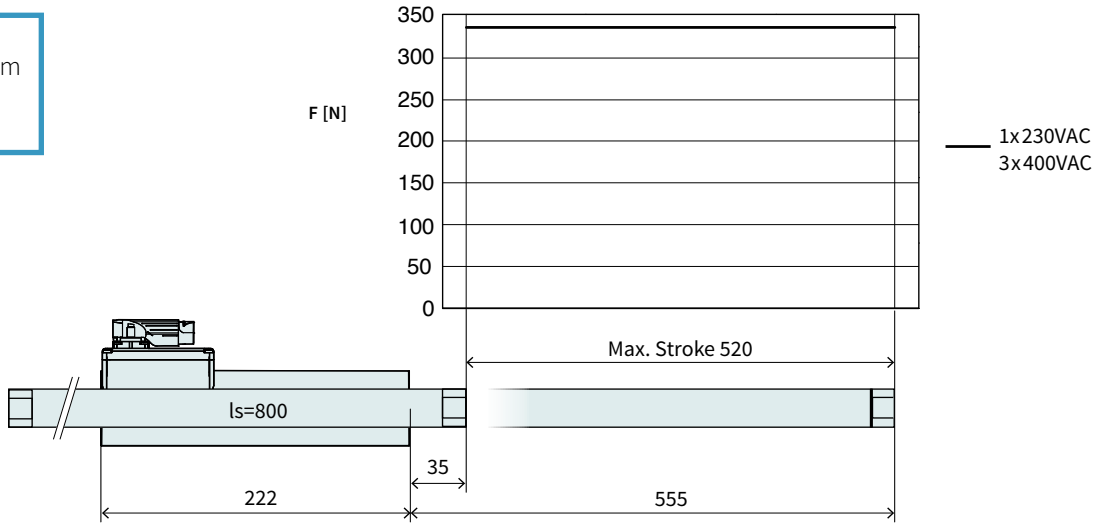

Dimensions in mm

Technical Data P10-54x120U/520				
Stroke				
Max. Stroke	mm	(in)	520	(20.49)
Force				
Max. Force @ 1x230VAC	N	(lbf)	335	(75.4)
Max. Force @ 3x400VAC	N	(lbf)	335	(75.4)
Max. Cont. Force [Passive cooling/ Fan / Fluid]	N	(lbf)	60 / 81 / 110	(14 / 18 / 25)
Max. Border Force relative	%		100	
Force Constant 1	N/A_{pk}	(lbf/A_{pk})	43	(9.67)
Force Constant 2	N/A_{rms}	(lbf/A_{rms})	60.8	(13.7)
Velocity				
Max. Velocity @ 1x230VAC	m/s	(in/s)	4.2	(169.9)
Max. Velocity @ 3x400VAC	m/s	(in/s)	7.3	(7.3)
Position Detection				
Repeatability	mm	(in)	±0.05	(±0.002)
Linearity	%		± 0.25	
Electrical Data				
Max. Current @ 1x230VAC	A_{pk} / A_{rms}		7.7 / 5.5	
Max. Current @ 3x400VAC	A_{pk} / A_{rms}		7.7 / 5.5	
Max. Cont. Current 1 [Passive cooling /Fan / Fluid]	A_{pk}		1.4 / 1.9 / 2.6	
Max. Cont. Current 2 [Passive cooling /Fan / Fluid]	A_{rms}		0.99 / 1.3 / 1.8	
Thermal Data				
Max. Winding Temperature (Sensor)	°C		90	
Thermal Resistance [Passive cooling / Fan / Fluid]	°K/W		2.1 / 1.2 / 0.62	
Thermal Time Constant [Passive cooling / Fan / Fluid]	s		1100 / 600 / 310	
Mechanical Data				
Slider Length	mm	(in)	800	(31)
Slider Mass	g	(lb)	3560	(7.83)

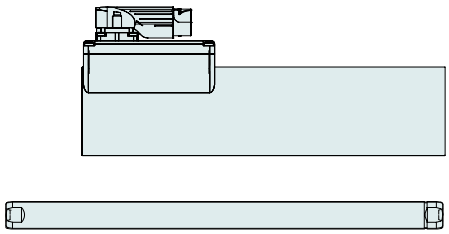

Item	Description	Item-No.
PS10-54x120U-BL-TU	Stator 3x400VAC, LinMot Encoder	0150-2722
PS10-54x120U-BL-TU-D24	Stator 3x400VAC, A/B Encoder, Pt1000	0150-2748
PS10-54x120U-BL-TU-D25	Stator 3x400VAC, A/B Encoder, PTC	0150-2752
PS10-54x120U-BL-TU-D25S	Stator 3x400VAC, A/B Encoder 5um, PTC	0150-2782
PL01-28x800/720	Slider 'standard'	0150-1385

P10-54x120U/640-BL-TU

Max. Stroke: 640 mm
Peak Force: 335 N

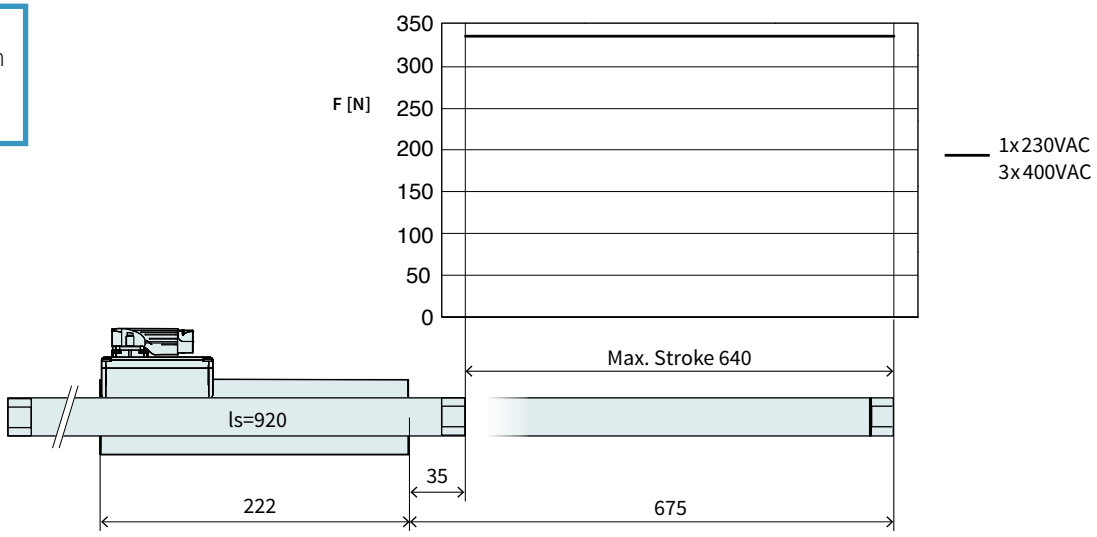

Dimensions in mm

Technical Data P10-54x120U/640				
Stroke				
Max. Stroke	mm	(in)	640	(25.19)
Force				
Max. Force @ 1x230VAC	N	(lbf)	335	(75.4)
Max. Force @ 3x400VAC	N	(lbf)	335	(75.4)
Max. Cont. Force [Passive cooling/ Fan / Fluid]	N	(lbf)	60 / 81 / 110	(14 / 18 / 25)
Max. Border Force relative	%		100	
Force Constant 1	N/A_{pk}	(lbf/A_{pk})	43	(9.67)
Force Constant 2	N/A_{rms}	(lbf/A_{rms})	60.8	(13.7)
Velocity				
Max. Velocity @ 1x230VAC	m/s	(in/s)	4.2	(169.9)
Max. Velocity @ 3x400VAC	m/s	(in/s)	7.3	(7.3)
Position Detection				
Repeatability	mm	(in)	±0.05	(±0.002)
Linearity	%		± 0.2	
Electrical Data				
Max. Current @ 1x230VAC	A_{pk} / A_{rms}		7.7 / 5.5	
Max. Current @ 3x400VAC	A_{pk} / A_{rms}		7.7 / 5.5	
Max. Cont. Current 1 [Passive cooling /Fan / Fluid]	A_{pk}		1.4 / 1.9 / 2.6	
Max. Cont. Current 2 [Passive cooling /Fan / Fluid]	A_{rms}		0.99 / 1.3 / 1.8	
Thermal Data				
Max. Winding Temperature (Sensor)	°C		90	
Thermal Resistance [Passive cooling / Fan / Fluid]	°K/W		2.1 / 1.2 / 0.62	
Thermal Time Constant [Passive cooling / Fan / Fluid]	s		1100 / 600 / 310	
Mechanical Data				
Slider Length	mm	(in)	920	(36)
Slider Mass	g	(lb)	4120	(9.06)

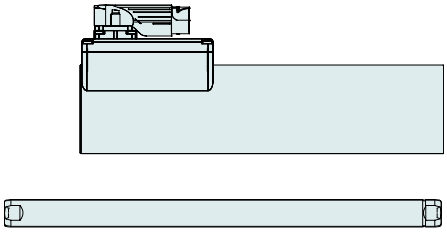

Item	Description	Item-No.
PS10-54x120U-BL-TU	Stator 3x400VAC, LinMot Encoder	0150-2722
PS10-54x120U-BL-TU-D24	Stator 3x400VAC, A/B Encoder, Pt1000	0150-2748
PS10-54x120U-BL-TU-D25	Stator 3x400VAC, A/B Encoder, PTC	0150-2752
PS10-54x120U-BL-TU-D25S	Stator 3x400VAC, A/B Encoder 5um, PTC	0150-2782
PL01-28x920/840	Slider 'standard'	0150-1386

P10-54x120U/730-BL-TU

Max. Stroke: 730 mm
Peak Force: 335 N

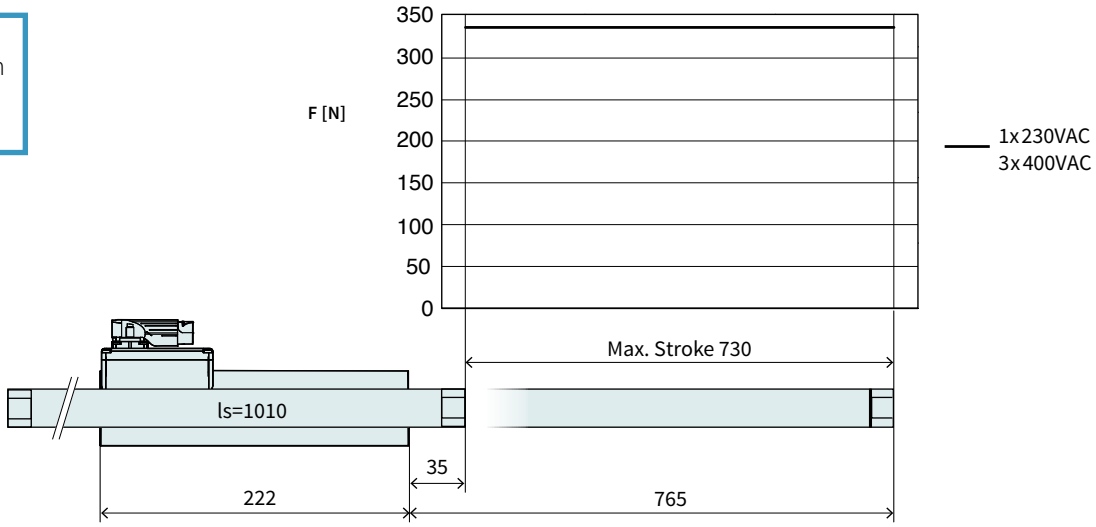

Dimensions in mm

Technical Data P10-54x120U/730				
Stroke				
Max. Stroke	mm	(in)	730	(28.69)
Force				
Max. Force @ 1x230VAC	N	(lbf)	335	(75.4)
Max. Force @ 3x400VAC	N	(lbf)	335	(75.4)
Max. Cont. Force [Passive cooling/ Fan / Fluid]	N	(lbf)	60 / 81 / 110	(14 / 18 / 25)
Max. Border Force relative	%		100	
Force Constant 1	N/A_{pk}	(lbf/A_{pk})	43	(9.67)
Force Constant 2	N/A_{rms}	(lbf/A_{rms})	60.8	(13.7)
Velocity				
Max. Velocity @ 1x230VAC	m/s	(in/s)	4.2	(169.9)
Max. Velocity @ 3x400VAC	m/s	(in/s)	7.3	(7.3)
Position Detection				
Repeatability	mm	(in)	±0.05	(±0.002)
Linearity	%		± 0.2	
Electrical Data				
Max. Current @ 1x230VAC	A_{pk} / A_{rms}		7.7 / 5.5	
Max. Current @ 3x400VAC	A_{pk} / A_{rms}		7.7 / 5.5	
Max. Cont. Current 1 [Passive cooling /Fan / Fluid]	A_{pk}		1.4 / 1.9 / 2.6	
Max. Cont. Current 2 [Passive cooling /Fan / Fluid]	A_{rms}		0.99 / 1.3 / 1.8	
Thermal Data				
Max. Winding Temperature (Sensor)	°C		90	
Thermal Resistance [Passive cooling / Fan / Fluid]	°K/W		2.1 / 1.2 / 0.62	
Thermal Time Constant [Passive cooling / Fan / Fluid]	s		1100 / 600 / 310	
Mechanical Data				
Slider Length	mm	(in)	1010	(40)
Slider Mass	g	(lb)	4540	(10)

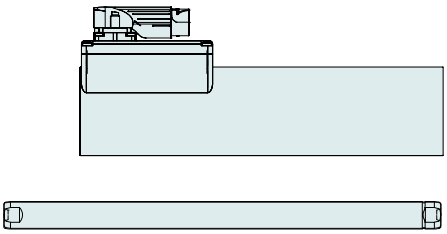

Item	Description	Item-No.
PS10-54x120U-BL-TU	Stator 3x400VAC, LinMot Encoder	0150-2722
PS10-54x120U-BL-TU-D24	Stator 3x400VAC, A/B Encoder, Pt1000	0150-2748
PS10-54x120U-BL-TU-D25	Stator 3x400VAC, A/B Encoder, PTC	0150-2752
PS10-54x120U-BL-TU-D25S	Stator 3x400VAC, A/B Encoder 5um, PTC	0150-2782
PL01-28x1010/930	Slider 'standard'	0150-1387

P10-54x120U/940-BL-TU

Max. Stroke: 940 mm
Peak Force: 335 N

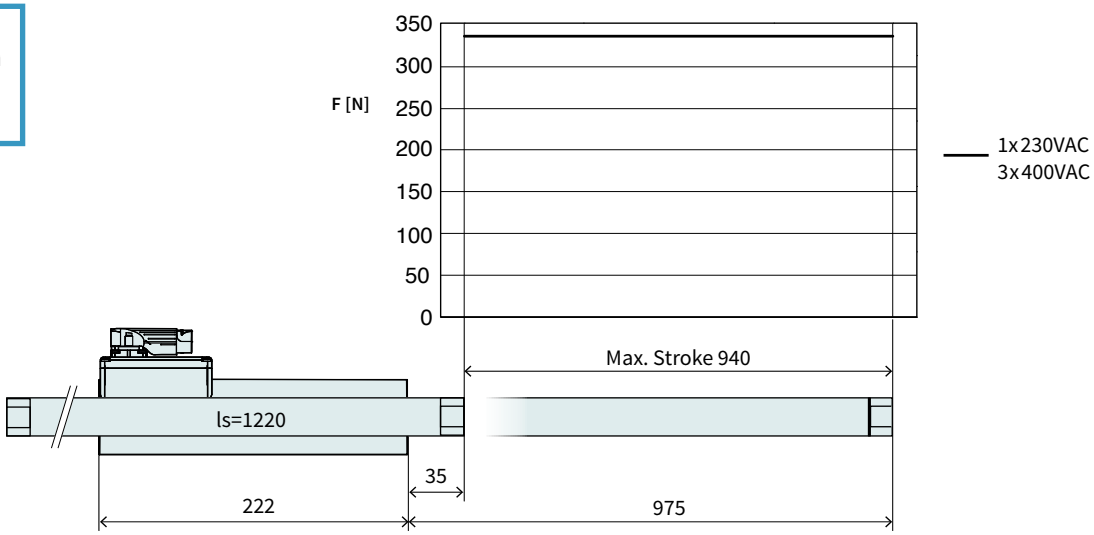

Dimensions in mm

Technical Data P10-54x120U/940				
Stroke				
Max. Stroke	mm	(in)	940	(36.99)
Force				
Max. Force @ 1x230VAC	N	(lbf)	335	(75.4)
Max. Force @ 3x400VAC	N	(lbf)	335	(75.4)
Max. Cont. Force [Passive cooling/ Fan / Fluid]	N	(lbf)	60 / 81 / 110	(14 / 18 / 25)
Max. Border Force relative	%		100	
Force Constant 1	N/A_{pk}	(lbf/A_{pk})	43	(9.67)
Force Constant 2	N/A_{rms}	(lbf/A_{rms})	60.8	(13.7)
Velocity				
Max. Velocity @ 1x230VAC	m/s	(in/s)	4.2	(169.9)
Max. Velocity @ 3x400VAC	m/s	(in/s)	7.3	(7.3)
Position Detection				
Repeatability	mm	(in)	±0.05	(±0.002)
Linearity	%		± 0.2	
Electrical Data				
Max. Current @ 1x230VAC	A_{pk} / A_{rms}		7.7 / 5.5	
Max. Current @ 3x400VAC	A_{pk} / A_{rms}		7.7 / 5.5	
Max. Cont. Current 1 [Passive cooling /Fan / Fluid]	A_{pk}		1.4 / 1.9 / 2.6	
Max. Cont. Current 2 [Passive cooling /Fan / Fluid]	A_{rms}		0.99 / 1.3 / 1.8	
Thermal Data				
Max. Winding Temperature (Sensor)	°C		90	
Thermal Resistance [Passive cooling / Fan / Fluid]	°K/W		2.1 / 1.2 / 0.62	
Thermal Time Constant [Passive cooling / Fan / Fluid]	s		1100 / 600 / 310	
Mechanical Data				
Slider Length	mm	(in)	1220	(48)
Slider Mass	g	(lb)	5510	(12.12)

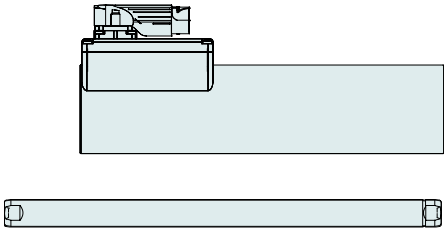

Item	Description	Item-No.
PS10-54x120U-BL-TU	Stator 3x400VAC, LinMot Encoder	0150-2722
PS10-54x120U-BL-TU-D24	Stator 3x400VAC, A/B Encoder, Pt1000	0150-2748
PS10-54x120U-BL-TU-D25	Stator 3x400VAC, A/B Encoder, PTC	0150-2752
PS10-54x120U-BL-TU-D25S	Stator 3x400VAC, A/B Encoder 5um, PTC	0150-2782
PL01-28x1220/1140	Slider 'standard'	0150-1388

P10-54x120U/1120-BL-TU

Max. Stroke: 1120 mm
Peak Force: 335 N

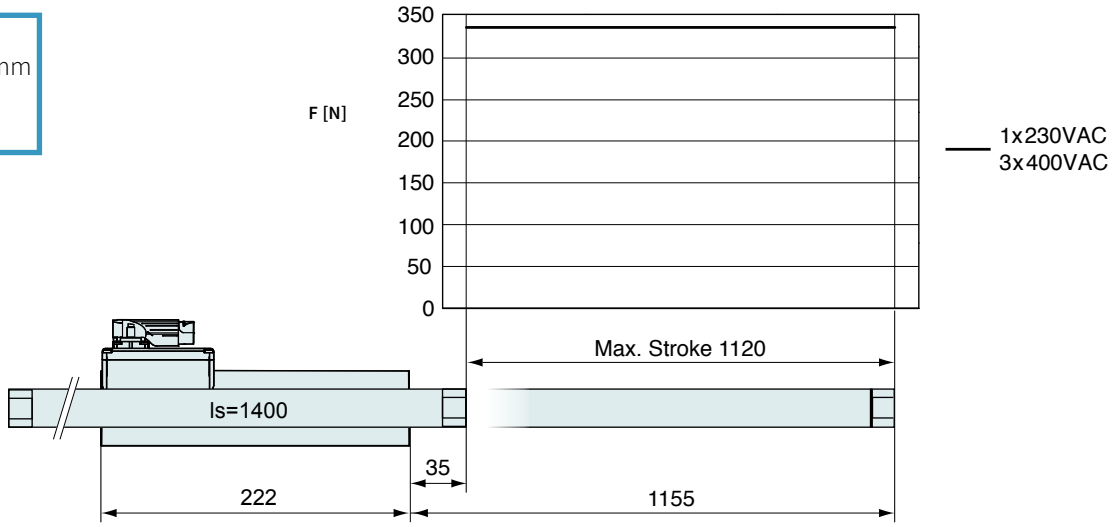

Dimensions in mm

Technical Data P10-54x120U/1120				
Stroke				
Max. Stroke	mm	(in)	1120	(44.1)
Force				
Max. Force @ 1x230VAC	N	(lbf)	335	(75.4)
Max. Force @ 3x400VAC	N	(lbf)	335	(75.4)
Max. Cont. Force [Passive cooling/ Fan / Fluid]	N	(lbf)	60 / 81 / 110	(14 / 18 / 25)
Max. Border Force relative	%		100	
Force Constant 1	N/A_{pk}	(lbf/A_{pk})	43	(9.67)
Force Constant 2	N/A_{rms}	(lbf/A_{rms})	60.8	(13.7)
Velocity				
Max. Velocity @ 1x230VAC	m/s	(in/s)	4.2	(169.9)
Max. Velocity @ 3x400VAC	m/s	(in/s)	7.3	(7.3)
Position Detection				
Repeatability	mm	(in)	±0.05	(±0.002)
Linearity	%		± 0.15	
Electrical Data				
Max. Current @ 1x230VAC	A_{pk} / A_{rms}		7.7 / 5.5	
Max. Current @ 3x400VAC	A_{pk} / A_{rms}		7.7 / 5.5	
Max. Cont. Current 1 [Passive cooling /Fan / Fluid]	A_{pk}		1.4 / 1.9 / 2.6	
Max. Cont. Current 2 [Passive cooling /Fan / Fluid]	A_{rms}		0.99 / 1.3 / 1.8	
Thermal Data				
Max. Winding Temperature (Sensor)	°C		90	
Thermal Resistance [Passive cooling / Fan / Fluid]	°K/W		2.1 / 1.2 / 0.62	
Thermal Time Constant [Passive cooling / Fan / Fluid]	s		1100 / 600 / 310	
Mechanical Data				
Slider Length	mm	(in)	1400	(55)
Slider Mass	g	(lb)	6350	(13.97)

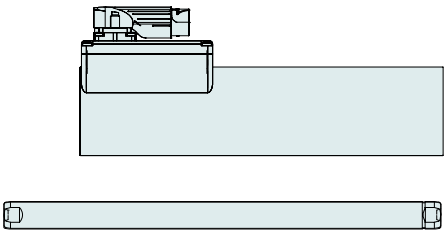

Item	Description	Item-No.
PS10-54x120U-BL-TU	Stator 3x400VAC, LinMot Encoder	0150-2722
PS10-54x120U-BL-TU-D24	Stator 3x400VAC, A/B Encoder, Pt1000	0150-2748
PS10-54x120U-BL-TU-D25	Stator 3x400VAC, A/B Encoder, PTC	0150-2752
PS10-54x120U-BL-TU-D25S	Stator 3x400VAC, A/B Encoder 5um, PTC	0150-2782
PL01-28x1400/1320	Slider 'standard'	0150-1389

P10-54x120U/1330-BL-TU

Max. Stroke: 1330 mm
Peak Force: 335 N

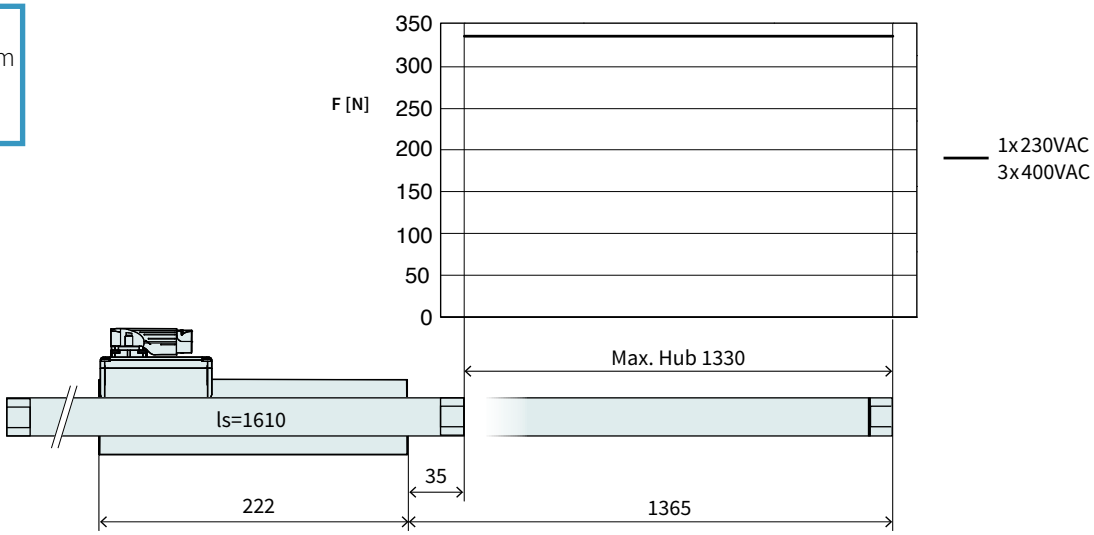

Dimensions in mm

Technical Data P10-54x120U/1330				
Stroke				
Max. Stroke	mm	(in)	1330	(52.39)
Force				
Max. Force @ 1x230VAC	N	(lbf)	335	(75.4)
Max. Force @ 3x400VAC	N	(lbf)	335	(75.4)
Max. Cont. Force [Passive cooling/ Fan / Fluid]	N	(lbf)	60 / 81 / 110	(14 / 18 / 25)
Max. Border Force relative	%		100	
Force Constant 1	N/A_{pk}	(lbf/A_{pk})	43	(9.67)
Force Constant 2	N/A_{rms}	(lbf/A_{rms})	60.8	(13.7)
Velocity				
Max. Velocity @ 1x230VAC	m/s	(in/s)	4.2	(169.9)
Max. Velocity @ 3x400VAC	m/s	(in/s)	7.3	(7.3)
Position Detection				
Repeatability	mm	(in)	±0.05	(±0.002)
Linearity	%		± 0.15	
Electrical Data				
Max. Current @ 1x230VAC	A_{pk} / A_{rms}		7.7 / 5.5	
Max. Current @ 3x400VAC	A_{pk} / A_{rms}		7.7 / 5.5	
Max. Cont. Current 1 [Passive cooling /Fan / Fluid]	A_{pk}		1.4 / 1.9 / 2.6	
Max. Cont. Current 2 [Passive cooling /Fan / Fluid]	A_{rms}		0.99 / 1.3 / 1.8	
Thermal Data				
Max. Winding Temperature (Sensor)	°C		90	
Thermal Resistance [Passive cooling / Fan / Fluid]	°K/W		2.1 / 1.2 / 0.62	
Thermal Time Constant [Passive cooling / Fan / Fluid]	s		1100 / 600 / 310	
Mechanical Data				
Slider Length	mm	(in)	1610	(63)
Slider Mass	g	(lb)	7330	(16.13)

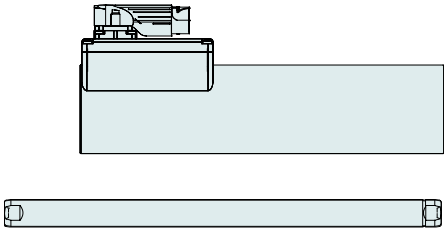

Item	Description	Item-No.
PS10-54x120U-BL-TU	Stator 3x400VAC, LinMot Encoder	0150-2722
PS10-54x120U-BL-TU-D24	Stator 3x400VAC, A/B Encoder, Pt1000	0150-2748
PS10-54x120U-BL-TU-D25	Stator 3x400VAC, A/B Encoder, PTC	0150-2752
PS10-54x120U-BL-TU-D25S	Stator 3x400VAC, A/B Encoder 5um, PTC	0150-2782
PL01-28x1610/1530	Slider 'standard'	0150-1390

P10-54x120U/1540-BL-TU

Max. Stroke: 1540 mm
Peak Force: 335 N

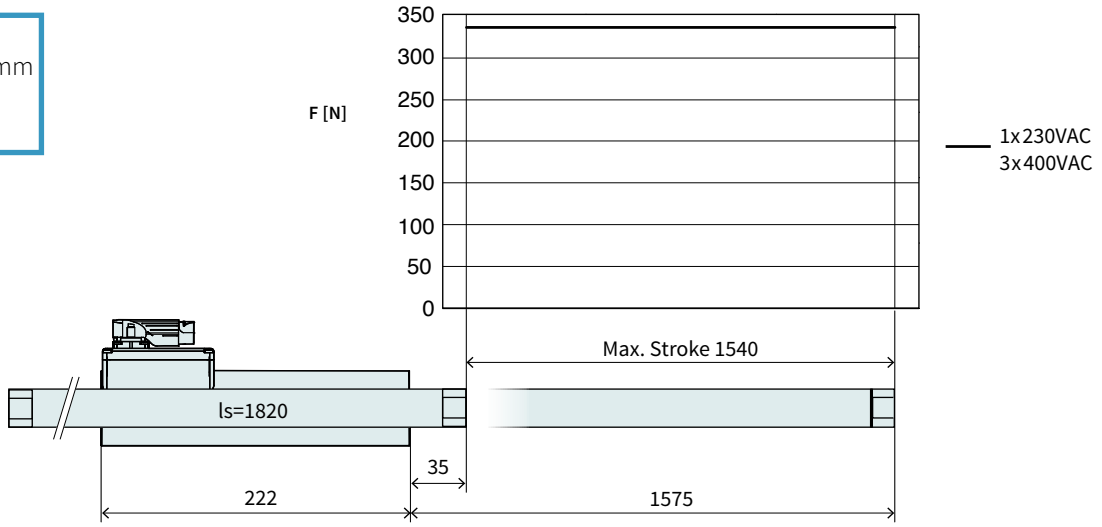

Dimensions in mm

Technical Data P10-54x120U/1540				
Stroke				
Max. Stroke	mm	(in)	1540	(60.6)
Force				
Max. Force @ 1x230VAC	N	(lbf)	335	(75.4)
Max. Force @ 3x400VAC	N	(lbf)	335	(75.4)
Max. Cont. Force [Passive cooling/ Fan / Fluid]	N	(lbf)	60 / 81 / 110	(14 / 18 / 25)
Max. Border Force relative	%		100	
Force Constant 1	N/A_{pk}	(lbf/A_{pk})	43	(9.67)
Force Constant 2	N/A_{rms}	(lbf/A_{rms})	60.8	(13.7)
Velocity				
Max. Velocity @ 1x230VAC	m/s	(in/s)	4.2	(169.9)
Max. Velocity @ 3x400VAC	m/s	(in/s)	7.3	(7.3)
Position Detection				
Repeatability	mm	(in)	±0.05	(±0.002)
Linearity	%		± 0.15	
Electrical Data				
Max. Current @ 1x230VAC	A_{pk} / A_{rms}		7.7 / 5.5	
Max. Current @ 3x400VAC	A_{pk} / A_{rms}		7.7 / 5.5	
Max. Cont. Current 1 [Passive cooling /Fan / Fluid]	A_{pk}		1.4 / 1.9 / 2.6	
Max. Cont. Current 2 [Passive cooling /Fan / Fluid]	A_{rms}		0.99 / 1.3 / 1.8	
Thermal Data				
Max. Winding Temperature (Sensor)	°C		90	
Thermal Resistance [Passive cooling / Fan / Fluid]	°K/W		2.1 / 1.2 / 0.62	
Thermal Time Constant [Passive cooling / Fan / Fluid]	s		1100 / 600 / 310	
Mechanical Data				
Slider Length	mm	(in)	1820	(72)
Slider Mass	g	(lb)	8300	(18.26)

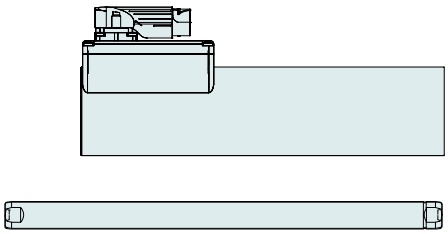

Item	Description	Item-No.
PS10-54x120U-BL-TU	Stator 3x400VAC, LinMot Encoder	0150-2722
PS10-54x120U-BL-TU-D24	Stator 3x400VAC, A/B Encoder, Pt1000	0150-2748
PS10-54x120U-BL-TU-D25	Stator 3x400VAC, A/B Encoder, PTC	0150-2752
PS10-54x120U-BL-TU-D25S	Stator 3x400VAC, A/B Encoder 5um, PTC	0150-2782
PL01-28x1820/1740	Slider 'standard'	0150-1395

P10-54x120U/1720-BL-TU

4

Max. Stroke: 1720 mm
Peak Force: 335 N

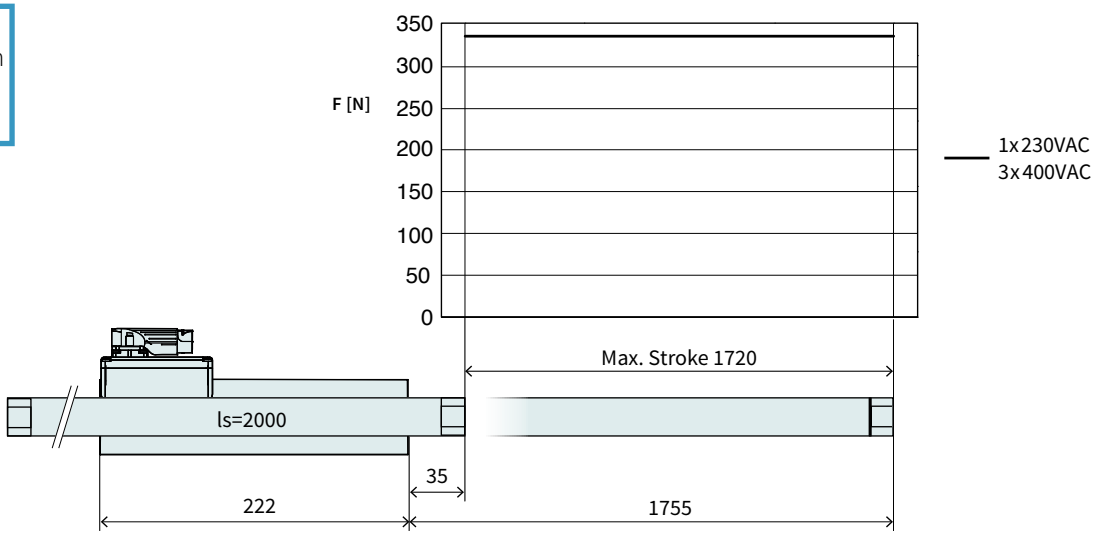

Dimensions in mm

Technical Data P10-54x120U/1720				
Stroke				
Max. Stroke	mm	(in)	1720	(67.7)
Force				
Max. Force @ 1x230VAC	N	(lbf)	335	(75.4)
Max. Force @ 3x400VAC	N	(lbf)	335	(75.4)
Max. Cont. Force [Passive cooling/ Fan / Fluid]	N	(lbf)	60 / 81 / 110	(14 / 18 / 25)
Max. Border Force relative	%		100	
Force Constant 1	N/A_{pk}	(lbf/A_{pk})	43	(9.67)
Force Constant 2	N/A_{rms}	(lbf/A_{rms})	60.8	(13.7)
Velocity				
Max. Velocity @ 1x230VAC	m/s	(in/s)	4.2	(169.9)
Max. Velocity @ 3x400VAC	m/s	(in/s)	7.3	(7.3)
Position Detection				
Repeatability	mm	(in)	±0.05	(±0.002)
Linearity	%		± 0.15	
Electrical Data				
Max. Current @ 1x230VAC	A_{pk} / A_{rms}		7.7 / 5.5	
Max. Current @ 3x400VAC	A_{pk} / A_{rms}		7.7 / 5.5	
Max. Cont. Current 1 [Passive cooling /Fan / Fluid]	A_{pk}		1.4 / 1.9 / 2.6	
Max. Cont. Current 2 [Passive cooling /Fan / Fluid]	A_{rms}		0.99 / 1.3 / 1.8	
Thermal Data				
Max. Winding Temperature (Sensor)	°C		90	
Thermal Resistance [Passive cooling / Fan / Fluid]	°K/W		2.1 / 1.2 / 0.62	
Thermal Time Constant [Passive cooling / Fan / Fluid]	s		1100 / 600 / 310	
Mechanical Data				
Slider Length	mm	(in)	2000	(79)
Slider Mass	g	(lb)	9140	(20.11)

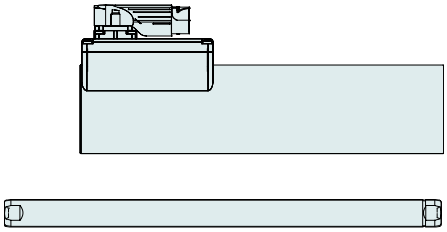

Item	Description	Item-No.
PS10-54x120U-BL-TU	Stator 3x400VAC, LinMot Encoder	0150-2722
PS10-54x120U-BL-TU-D24	Stator 3x400VAC, A/B Encoder, Pt1000	0150-2748
PS10-54x120U-BL-TU-D25	Stator 3x400VAC, A/B Encoder, PTC	0150-2752
PS10-54x120U-BL-TU-D25S	Stator 3x400VAC, A/B Encoder 5um, PTC	0150-2782
PL01-28x2000/1920	Slider 'standard'	0150-1396

Motor Cable

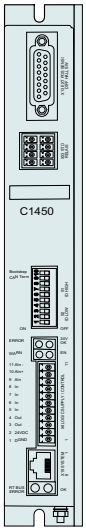

C1400

B Connector MC10-B/m

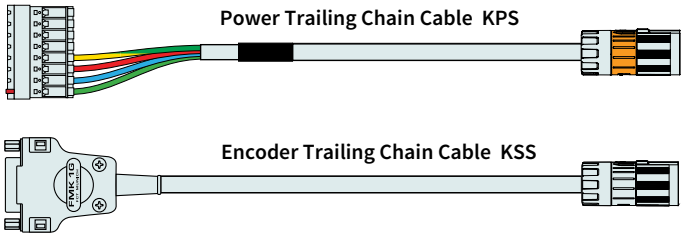

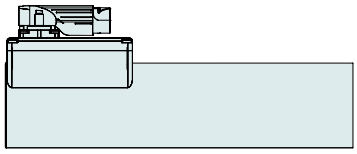

P10-54x120U

D15s Connector MC01-D15s-45°/f

Uk Connector MC10-Uk/f



E1400

L Connector MC10-L/m

Tk Connector MC10-Tk/f

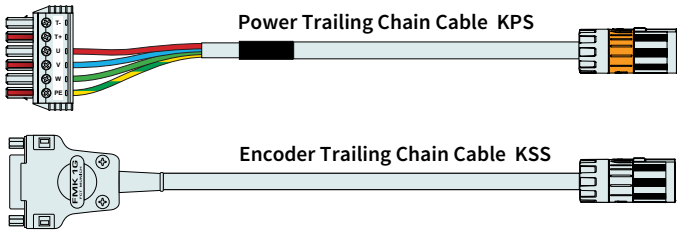

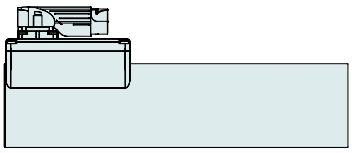

P10-54x120U

D15s Connector MC01-D15s-45°/f

Uk Connector MC10-Uk/f

ORDERING INFORMATION

TRAILING CHAIN CABLE FOR LINMOT DRIVES		
Item	**Description**	**Item-No.**
KPS07-04/02-L/Tk-3	Power Trailing Chain Cable E1400/P10-54, 3 m	0150-2670
KPS07-04/02-L/Tk-5	Power Trailing Chain Cable E1400/P10-54, 5 m	0150-2671
KPS07-04/02-L/Tk-8	Power Trailing Chain Cable E1400/P10-54, 8 m	0150-2672
KPS07-04/02-L/Tk-12	Power Trailing Chain Cable E1400/P10-54, 12 m	0150-2673
KPS07-04/02-B/Tk-3	Power Trailing Chain Cable C1400/P10-54, 3 m	0150-3648
KPS07-04/02-B/Tk-5	Power Trailing Chain Cable C1400/P10-54, 5 m	0150-3657
KPS07-04/02-B/Tk-8	Power Trailing Chain Cable C1400/P10-54, 8 m	0150-3658
KPS07-04/02-B/Tk-12	Power Trailing Chain Cable C1400/P10-54, 12 m	0150-3659
KSS 05-02/08-D15s/Uk-3	Encoder Trailing Chain Cable D15s/Uk, 3 m	0150-2650
KSS 05-02/08-D15s/Uk-5	Encoder Trailing Chain Cable D15s/Uk, 5 m	0150-2651
KSS 05-02/08-D15s/Uk-8	Encoder Trailing Chain Cable D15s/Uk, 8 m	0150-2652
KSS 05-02/08-D15s/Uk-12	Encoder Trailing Chain Cable D15s/Uk, 12 m	0150-2653

TRAILING CHAIN CABLES FOR THIRD PARTY DRIVES		
Item	**Description**	**Item-No.**
KPS07-04/02-./Tk-10	Power Trailing Chain Cable .../Tk, 10 m	0150-3626
KPS07-04/02-./Tk-	Power Trailing Chain Cable .../Tk, Custom length	0150-3622
KSS 05-02/13-./Uk-10	Encoder Trailing Chain Cable ./Uk, 10 m	0150-3627
KSS 05-02/13-./Uk-	Encoder Trailing Chain Cable ./Uk, Custom length	0150-3619

CONNECTOR & CABLE (INDIVIDUAL)		
Item	**Description**	**Item-No.**
MC10-L/m	Connector Power E1400/X2	0150-3382
MC01-D15/f	Motor Connector D15 (f)	0150-3136
MC10-Tk/f	Connector Power PS10-54	0150-3482
MC10-Uk/f	Connector Encoder PS10-54	0150-3483
KPS07-04/02	Power Trailing Chain Cable P10-54 (per m)	0150-2372
KSS05-02/08	Trailing Chain Cable Encoder LinMot (per m)	0150-2258
KSS05-02/13	Trailing Chain Cable Encoder P10-...-Dxx (per m)	0150-2259

MOTOR FLANGES



Item	Description	Item-No.
PF10-54x140	Flange for PS10-54x120	0150-2733

FIND MORE PRODUCT DETAILS IN THE CHAPTER "ACCESSORIES".

FANS



Item	Description	Item-No.
HV01-37/48	Fan cooling for H01-37/48 &PF02-37/48	0150-5051

FIND MORE PRODUCT DETAILS IN THE CHAPTER "ACCESSORIES".

SLIDER MOUNTING



Item	Description	Item-No.
PLF01-28	Fixed Bearing Set for 27/28 mm sliders	0150-3087
PLF01-28-SS	Fixed Bearing Set for 27/28 mm sliders, stainless steel	0150-3297
PLL01-28	Floating Bearing for 28 mm sliders	0150-3094
PLM01-28-MK	Mounting Kit for 28 mm sliders	0150-3095

FIND MORE PRODUCT DETAILS IN THE CHAPTER "ACCESSORIES".

BEARING KIT

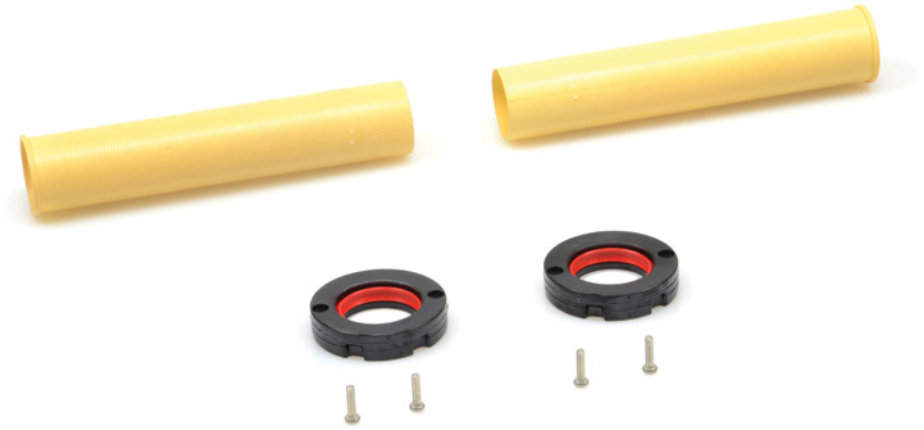

Item	Description	Item-No.
PB10-54x120-L	Bearing kit for PS10-54x120	0150-3671

FIND MORE PRODUCT DETAILS IN THE CHAPTER "ACCESSORIES".

EXTERNAL POSITION SENSORS



Item	Description	Item-No.
MS01-1/D	Linear Encoder 1µm, A/B (for incremental strip)	0150-1840
MB01-1000	Magnetic incremental strip for MS01-1/D, per cm	0150-1963
KS025-D15/D-Encoder	Encoder Cable (Length in m)	0150-3168

FIND MORE PRODUCT DETAILS IN THE CHAPTER "ACCESSORIES".



Item	Description	Item-No.
MS01-1/D-SSI	Linear Encoder 1µm, A/B (for absolute strip)	0150-2095
MB01-1000-ABS	Magnetic absolute strip for MS01-1/D-SSI (per cm)	0150-2096
EC01-ABS/ENC-12-S	MS01-1/D-SSI Encoder connector straight	0150-3616
KSS01-12-D15/ABS-ENC	Special cable for MS01-1/D-SSI on C1100/C1200/C1400/E1200/E1400 Drives	0150-3652

FIND MORE PRODUCT DETAILS IN THE CHAPTER "ACCESSORIES".

LINEAR MOTORS P10-54x180U



- 230VAC and 3 x 400VAC technology
- Peak forces up to 502 N
- LinMot Encoder or Incremental Encoder
- Extremely high dynamic
- Rotating push-pull TWIN connector for power and encoder cables
- Can also be controlled by standard third-party servo drives

4

LINEAR MOTORS P10-54x180U

Technical Data **421**

Motor Specifications

P10-54x180U/10 ..... **426**
P10-54x180U/70 ..... **427**
P10-54x180U/160 ..... **428**
P10-54x180U/280 ..... **429**
P10-54x180U/370 ..... **430**
P10-54x180U/460 ..... **431**
P10-54x180U/580 ..... **432**
P10-54x180U/670 ..... **433**
P10-54x180U/880 ..... **434**
P10-54x180U/1060 ..... **435**
P10-54x180U/1270 ..... **436**
P10-54x180U/1480 ..... **437**
P10-54x180U/1660 ..... **438**

Accessories **439**



MOTOR FAMILY P10-54x180U

Technical Data				
Stroke				
Max. Stroke (ES)	mm	(in)	1660	(65.4)
Force				
Max. Force @ 1x230VAC	N	(lbf)	502	(113)
Max. Force @ 3x400VAC	N	(lbf)	502	(113)
Max. Cont. Force [Passive cooling/ Fan / Fluid]	N	(lbf)	84 / 110 / 160	(19 / 26 / 36)
Max. Border Force relative	%		100	
Force Constant 1	N/A_{pk}	(lbf/A_{pk})	33	(7.42)
Force Constant 2	N/A_{rms}	(lbf/A_{rms})	46.7	(10.5)
Velocity				
Max. Velocity @ 1x230VAC	m/s	(in/s)	5.4	(219.9)
Max. Velocity @ 3x400VAC	m/s	(in/s)	9.5	(379.9)
Position Detection				
Position Resolution	mm	(in)	0.007	(0.0003)
Repeatability	mm	(in)	±0.05	(±0.002)
Position Resolution with ES	mm	(in)	0.001	(0.00004)
Repeatability with ES	mm	(in)	±0.01	(±0.0004)
Linearity with ES	mm	(in)	±0.01	(±0.0004)
Electrical Data				
Max. Current @ 1x230VAC	A_{pk} / A_{rms}		15.1 / 10.6	
Max. Current @ 3x400VAC	A_{pk} / A_{rms}		15.1 / 10.6	
Max. Cont. Current 1 [Passive cooling /Fan / Fluid]	A_{pk}		2.6 / 3.5 / 4.9	
Max. Cont. Current 2 [Passive cooling /Fan / Fluid]	A_{rms}		1.8 / 2.4 / 3.5	
Back EMF Constant	V_{pk} / (m/s)	(V_{pk} / (in/s))	38.1	(0.968)
Terminal Resistance 25 °C / 120 °C	Ohm		5.7 / 7.8	
Terminal Inductivity	mH		4.6	
Magnetic Period	mm	(in)	60	(2.35)
Thermal Data				
Max. Winding Temperature (Sensor)	°C		90	
Thermal Resistance [Passive cooling / Fan / Fluid]	°K/W		1.6 / 0.86 / 0.43	
Thermal Time Constant [Passive cooling / Fan / Fluid]	s		1200 / 650 / 320	
Mechanical Data				
Stator Diameter	mm	(in)	54	(2.1)
Stator Length	mm	(in)	282	(11)
Stator Mass	g	(lb)	2220	(4.88)
Slider Diameter	mm	(in)	28	(1.1)
Slider Length	mm	(in)	350 - 2000	(14 - 79)
Slider Mass	g	(lb)	1460 - 9140	(3.21 - 20.11)
IP Code			IP 65	

4

STATOR

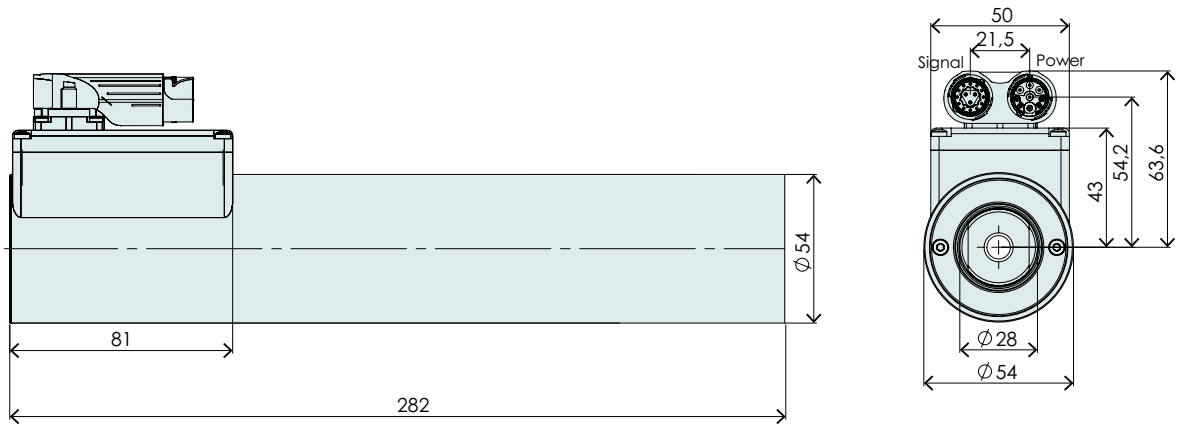

Item	Description	Item-No.
PS10-54x180U-BL-TU	Stator 3x400VAC, LinMot Encoder	0150-2723
PS10-54x180U-BL-TU-D24	Stator 3x400VAC, A/B Encoder, Pt1000	0150-2749
PS10-54x180U-BL-TU-D25	Stator 3x400VAC, A/B Encoder, PTC	0150-2753
PS10-54x180U-BL-TU-D25S	Stator 3x400VAC, A/B Encoder 5um, PTC	0150-2783

CONNECTOR PS10-54x180U-BL-TU

Motor Connector Wiring		Connector Encoder Uk	Wire Color Motor Cable
+Vcc	Supply	1	red
GND	Supply	2	black
Sin+	Encoder	3	yellow
Sin-	Encoder	4	orange
Cos+	Encoder	5	green
Cos-	Encoder	6	blue
Mot. Link C+	Communication	7	pink
Mot. Link C-	Communication	8	grey
n. c.	n. c.	9	n. c.
n. c.	n. c.	10	n. c.
n. c.	n. c.	11	n. c.
n. c.	n. c.	12	n. c.
n. c.	n. c.	A	n. c.
n. c.	n. c.	B	n. c.
n. c.	n. c.	C	n. c.

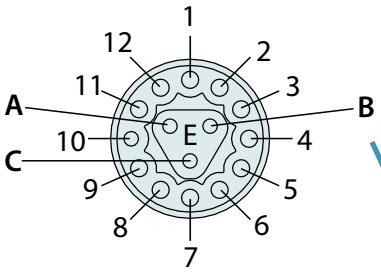

Connector Encoder Uk

View: Motor connector, plug side

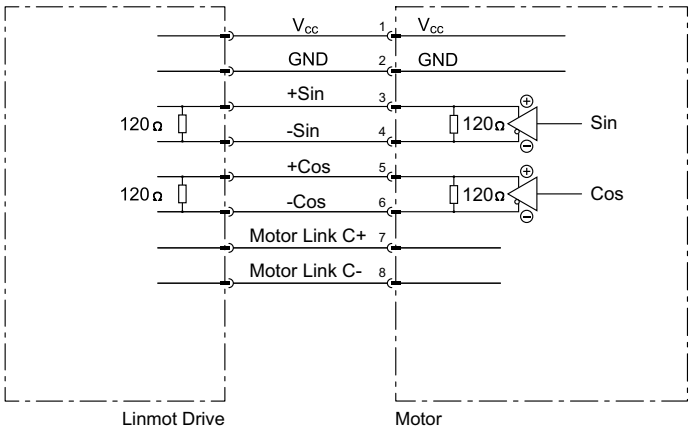

Motor Connector Wiring	Connector Power Tk	Wire Color Motor Cable
Phase U	A	red
PE	PE	yellow-green
Phase V	B	blue
Phase W	C	green
n. c.	1	n. c.
n. c.	2	n. c.
n. c.	3	n. c.
n. c.	4	n. c.
n. c.	5	n. c.

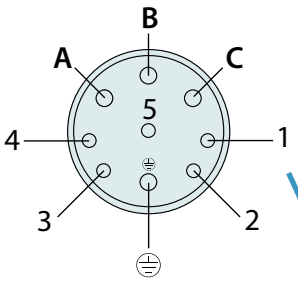

Connector Power Tk

View: Motor connector, plug side

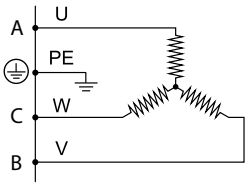

CONNECTOR PS10-54x180U-BL-TU-D24 / 25 / 25S

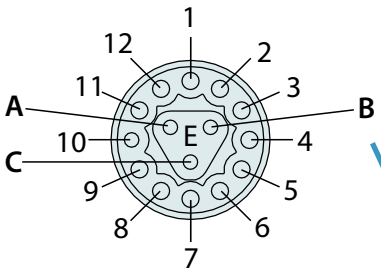

Connector Encoder Uk

View: Motor connector, plug side

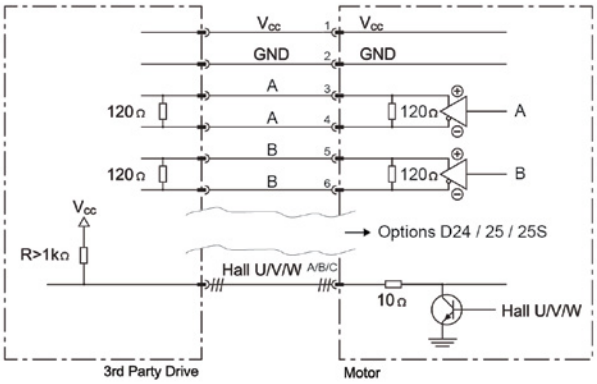

PS10-54x180U-BL-TU-D24

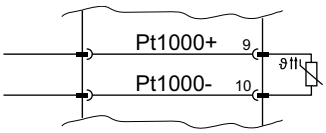

Pt1000 Characteristic emulated

PS10-54x180U-BL-TU-D25
PS10-54x180U-BL-TU-D25S

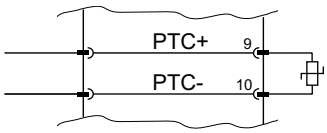

PTC (switching type)
350 Ω / 18 kΩ emulated[1]

Motor Connector Wiring				
PS10-54x180U-BL-TU-D24	PS10-54x180U-BL-TU-D25 PS10-54x180U-BL-TU-D25S	Function	Connector Encoder Uk	Wire Color Motor Cable
+Vcc	+Vcc	Supply	1	white
GND	GND	Supply	2	brown
A	A	Encoder	3	grey
/ A	/ A	Encoder	4	pink
B	B	Encoder	5	blue
/ B	/ B	Encoder	6	red
–	–	–	7	green (do not connect)
–	–	–	8	yellow (do not connect)
Pt1000+	PTC+	Temp.[2]	9	yellow-brown
Pt1000-	PTC-	Temp.[2]	10	white-yellow
REF+	REF+	Encoder	11	black
REF-	REF-	Encoder	12	purple
Hall U	Hall U	Encoder	A	grey-red
Hall V	Hall V	Encoder	B	red-blue
Hall W	Hall W	Encoder	C	white-green

1) under 350 Ω = no fault, over 18 kΩ = Fault
2) The temperature evaluation circiut must be powered from the encoder supply and must be at the same potential.
The grounds of the temperature evaluation circuit and the encoder have to be connected. The encoder must have been powered on for at least 50 ms, before valid temperatures can be measured. If the encoder is powered off, 20k Ohms are measured between Pins 9 and 10.

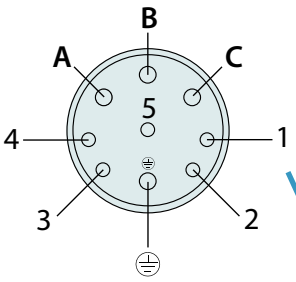

Connector Power Tk

View: Motor connector, plug side

PS10-54x180U-BL-TU-D24

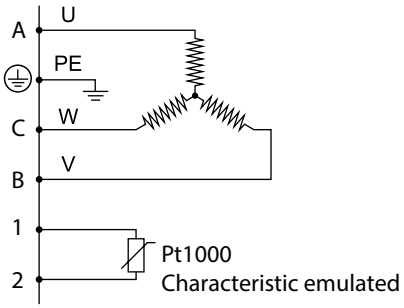

PS10-54x180U-BL-TU-D25
PS10-54x180U-BL-TU-D25S

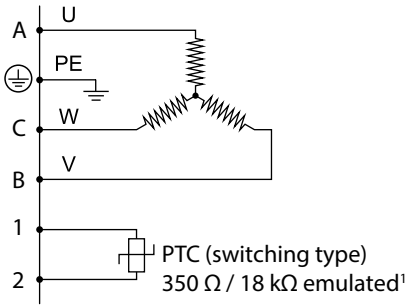

Motor Connector Wiring			
PS10-54x180U-BL-TU-D24	PS10-54x180U-BL-TU-D25 PS10-54x180U-BL-TU-D25S	Connector Power Tk	Wire Color Motor Cable
Phase U	Phase U	A	red
PE	PE	PE	yellow-green
Phase V	Phase V	B	blue
Phase W	Phase W	C	green
Pt1000+	PTC+	1	turquoise
Pt1000-	PTC-	2	grey
n. c.	n. c.	3	n. c.
n. c.	n. c.	4	n. c.
n. c.	n. c.	5	n. c.

1) under 350 Ω = no fault, over 18 Ω = Fault

SLIDER

Slider Standard

Number of grooves determines the slider type (see chapter 2 / slider) and marks the front end.

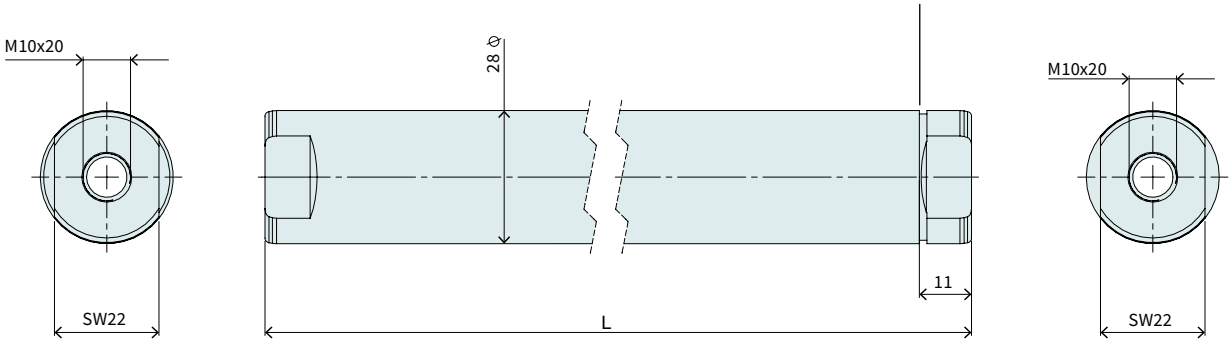

Slider Standard			
Item	Description	Max. Stroke [mm]	Item-No.
PL01-28x350/270	Slider 'standard'	10	0150-1380
PL01-28x410/330	Slider 'standard'	70	0150-1381
PL01-28x500/420	Slider 'standard'	160	0150-1382
PL01-28x620/540	Slider 'standard'	280	0150-1383
PL01-28x710/630	Slider 'standard'	370	0150-1384
PL01-28x800/720	Slider 'standard'	460	0150-1385
PL01-28x920/840	Slider 'standard'	580	0150-1386
PL01-28x1010/930	Slider 'standard'	670	0150-1387
PL01-28x1220/1140	Slider 'standard'	880	0150-1388
PL01-28x1400/1320	Slider 'standard'	1060	0150-1389
PL01-28x1610/1530	Slider 'standard'	1270	0150-1390
PL01-28x1820/1740	Slider 'standard'	1480	0150-1395
PL01-28x2000/1920	Slider 'standard'	1660	0150-1396

P10-54x180U/10-BL-TU

Max. Stroke: 10 mm
Peak Force: 502 N

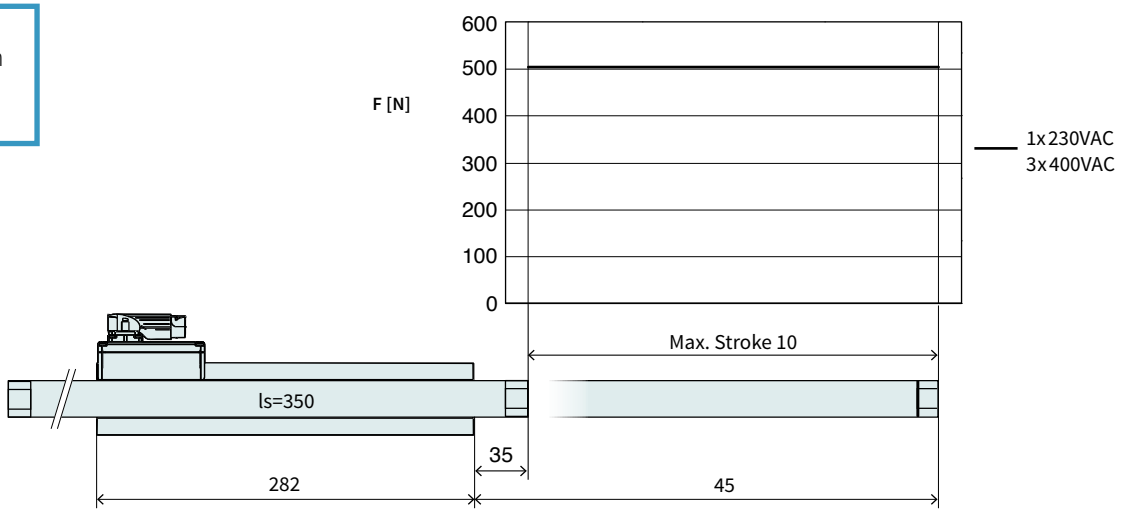

Dimensions in mm

Technical Data P10-54x180U/10				
Stroke				
Max. Stroke	mm	(in)	10	(0.39)
Force				
Max. Force @ 1x230VAC	N	(lbf)	502	(113)
Max. Force @ 3x400VAC	N	(lbf)	502	(113)
Max. Cont. Force [Passive cooling/ Fan / Fluid]	N	(lbf)	84 / 110 / 160	(19 / 26 / 36)
Max. Border Force relative	%		100	
Force Constant 1	N/A_{pk}	(lbf/A_{pk})	33	(7.42)
Force Constant 2	N/A_{rms}	(lbf/A_{rms})	46.7	(10.5)
Velocity				
Max. Velocity @ 1x230VAC	m/s	(in/s)	5.4	(219.9)
Max. Velocity @ 3x400VAC	m/s	(in/s)	9.5	(9.5)
Position Detection				
Repeatability	mm	(in)	±0.05	(±0.002)
Linearity	%		± 7.6	
Electrical Data				
Max. Current @ 1x230VAC	A_{pk} / A_{rms}		15.1 / 10.6	
Max. Current @ 3x400VAC	A_{pk} / A_{rms}		15.1 / 10.6	
Max. Cont. Current 1 [Passive cooling /Fan / Fluid]	A_{pk}		2.6 / 3.5 / 4.9	
Max. Cont. Current 2 [Passive cooling /Fan / Fluid]	A_{rms}		1.8 / 2.4 / 3.5	
Thermal Data				
Max. Winding Temperature (Sensor)	°C		90	
Thermal Resistance [Passive cooling / Fan / Fluid]	°K/W		1.6 / 0.86 / 0.43	
Thermal Time Constant [Passive cooling / Fan / Fluid]	s		1200 / 650 / 320	
Mechanical Data				
Slider Length	mm	(in)	350	(14)
Slider Mass	g	(lb)	1460	(3.21)

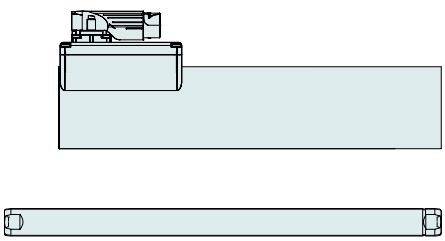

Item	Description	Item-No.
PS10-54x180U-BL-TU	Stator 3x400VAC, LinMot Encoder	0150-2723
PS10-54x120U-BL-TU-D24	Stator 3x400VAC, A/B Encoder, Pt1000	0150-2749
PS10-54x120U-BL-TU-D25	Stator 3x400VAC, A/B Encoder, PTC	0150-2753
PS10-54x120U-BL-TU-D25S	Stator 3x400VAC, A/B Encoder 5um, PTC	0150-2783
PL01-28x350/270	Slider 'standard'	0150-1380

P10-54x180U/70-BL-TU

Max. Stroke: 70 mm
Peak Force: 502 N

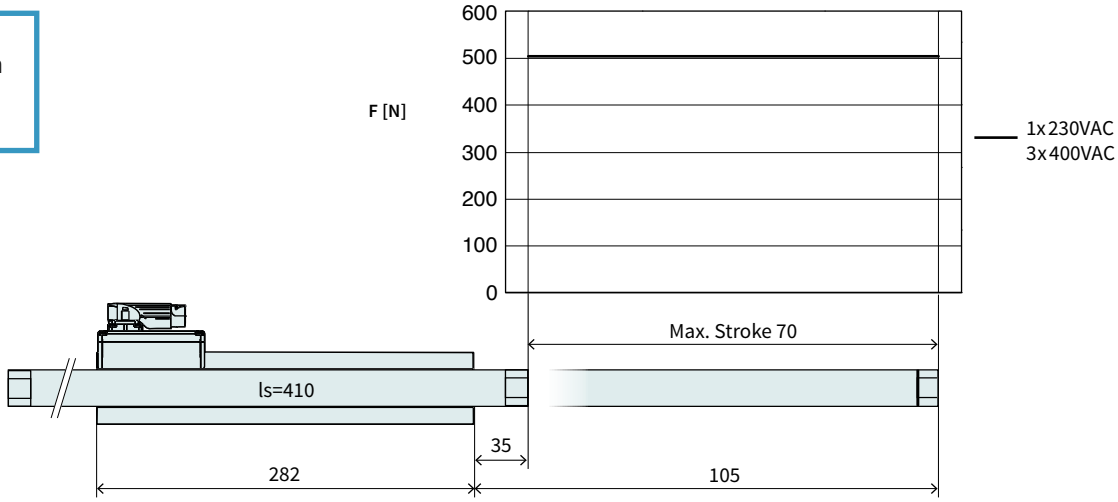

Dimensions in mm

Technical Data P10-54x180U/70				
Stroke				
Max. Stroke	mm	(in)	70	(2.75)
Force				
Max. Force @ 1x230VAC	N	(lbf)	502	(113)
Max. Force @ 3x400VAC	N	(lbf)	502	(113)
Max. Cont. Force [Passive cooling/ Fan / Fluid]	N	(lbf)	84 / 110 / 160	(19 / 26 / 36)
Max. Border Force relative	%		100	
Force Constant 1	N/A_{pk}	(lbf/A_{pk})	33	(7.42)
Force Constant 2	N/A_{rms}	(lbf/A_{rms})	46.7	(10.5)
Velocity				
Max. Velocity @ 1x230VAC	m/s	(in/s)	5.4	(219.9)
Max. Velocity @ 3x400VAC	m/s	(in/s)	9.5	(9.5)
Position Detection				
Repeatability	mm	(in)	±0.05	(±0.002)
Linearity	%		± 1.15	
Electrical Data				
Max. Current @ 1x230VAC	A_{pk} / A_{rms}		15.1 / 10.6	
Max. Current @ 3x400VAC	A_{pk} / A_{rms}		15.1 / 10.6	
Max. Cont. Current 1 [Passive cooling /Fan / Fluid]	A_{pk}		2.6 / 3.5 / 4.9	
Max. Cont. Current 2 [Passive cooling /Fan / Fluid]	A_{rms}		1.8 / 2.4 / 3.5	
Thermal Data				
Max. Winding Temperature (Sensor)	°C		90	
Thermal Resistance [Passive cooling / Fan / Fluid]	°K/W		1.6 / 0.86 / 0.43	
Thermal Time Constant [Passive cooling / Fan / Fluid]	s		1200 / 650 / 320	
Mechanical Data				
Slider Length	mm	(in)	410	(16)
Slider Mass	g	(lb)	1740	(3.83)

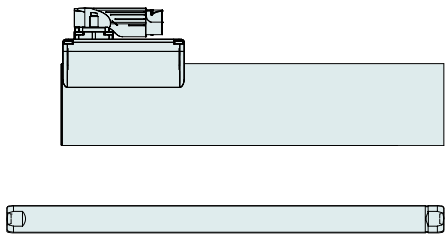

Item	Description	Item-No.
PS10-54x180U-BL-TU	Stator 3x400VAC, LinMot Encoder	0150-2723
PS10-54x120U-BL-TU-D24	Stator 3x400VAC, A/B Encoder, Pt1000	0150-2749
PS10-54x120U-BL-TU-D25	Stator 3x400VAC, A/B Encoder, PTC	0150-2753
PS10-54x120U-BL-TU-D25S	Stator 3x400VAC, A/B Encoder 5um, PTC	0150-2783
PL01-28x410/330	Slider 'standard'	0150-1381

P10-54x180U/160-BL-TU

Max. Stroke: 160 mm
Peak Force: 502 N

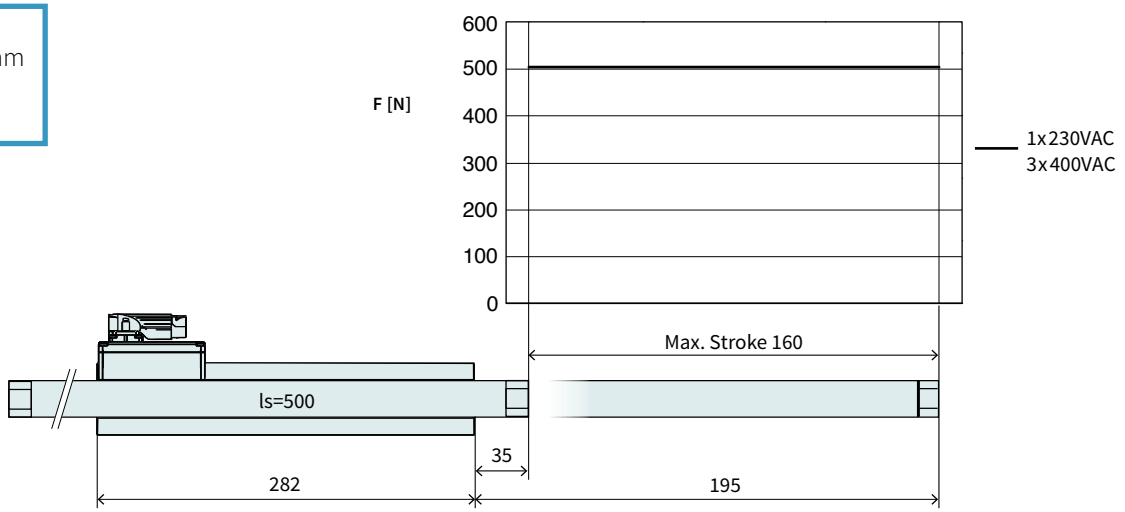

Dimensions in mm

Technical Data P10-54x180U/160				
Stroke				
Max. Stroke	mm	(in)	160	(6.29)
Force				
Max. Force @ 1x230VAC	N	(lbf)	502	(113)
Max. Force @ 3x400VAC	N	(lbf)	502	(113)
Max. Cont. Force [Passive cooling/ Fan / Fluid]	N	(lbf)	84 / 110 / 160	(19 / 26 / 36)
Max. Border Force relative	%		100	
Force Constant 1	N/A_{pk}	(lbf/A_{pk})	33	(7.42)
Force Constant 2	N/A_{rms}	(lbf/A_{rms})	46.7	(10.5)
Velocity				
Max. Velocity @ 1x230VAC	m/s	(in/s)	5.4	(219.9)
Max. Velocity @ 3x400VAC	m/s	(in/s)	9.5	(9.5)
Position Detection				
Repeatability	mm	(in)	±0.05	(±0.002)
Linearity	%		± 0.55	
Electrical Data				
Max. Current @ 1x230VAC	A_{pk} / A_{rms}		15.1 / 10.6	
Max. Current @ 3x400VAC	A_{pk} / A_{rms}		15.1 / 10.6	
Max. Cont. Current 1 [Passive cooling /Fan / Fluid]	A_{pk}		2.6 / 3.5 / 4.9	
Max. Cont. Current 2 [Passive cooling /Fan / Fluid]	A_{rms}		1.8 / 2.4 / 3.5	
Thermal Data				
Max. Winding Temperature (Sensor)	°C		90	
Thermal Resistance [Passive cooling / Fan / Fluid]	°K/W		1.6 / 0.86 / 0.43	
Thermal Time Constant [Passive cooling / Fan / Fluid]	s		1200 / 650 / 320	
Mechanical Data				
Slider Length	mm	(in)	500	(20)
Slider Mass	g	(lb)	2160	(4.75)

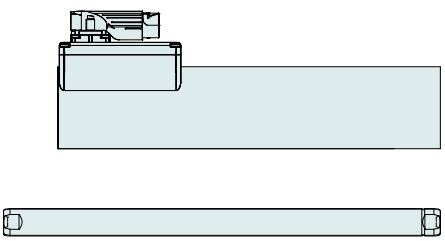

Item	Description	Item-No.
PS10-54x180U-BL-TU	Stator 3x400VAC, LinMot Encoder	0150-2723
PS10-54x120U-BL-TU-D24	Stator 3x400VAC, A/B Encoder, Pt1000	0150-2749
PS10-54x120U-BL-TU-D25	Stator 3x400VAC, A/B Encoder, PTC	0150-2753
PS10-54x120U-BL-TU-D25S	Stator 3x400VAC, A/B Encoder 5um, PTC	0150-2783
PL01-28x500/420	Slider 'standard'	0150-1382

P10-54x180U/280-BL-TU

Max. Stroke: 280 mm
Peak Force: 502 N

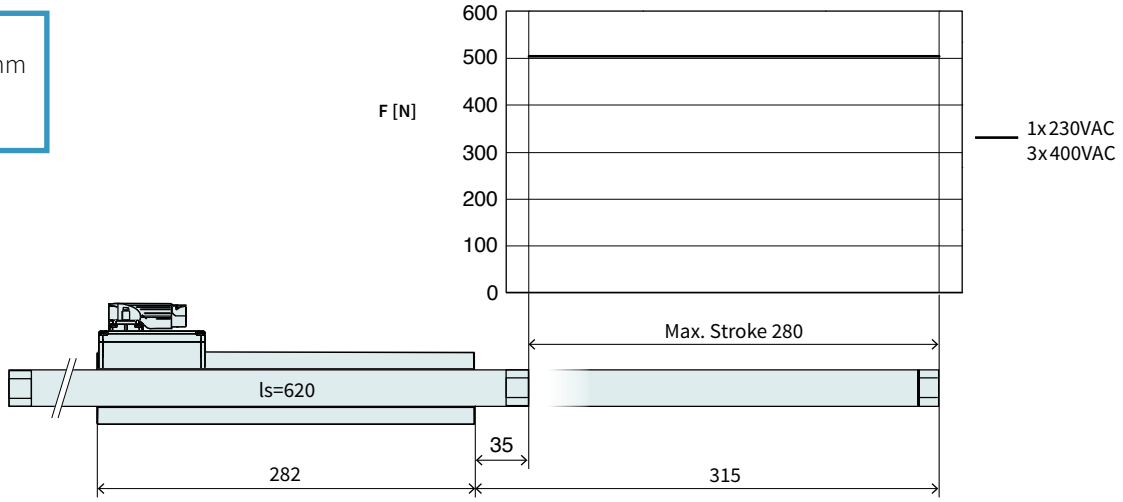

Dimensions in mm

Technical Data P10-54x180U/280				
Stroke				
Max. Stroke	mm	(in)	280	(10.99)
Force				
Max. Force @ 1x230VAC	N	(lbf)	502	(113)
Max. Force @ 3x400VAC	N	(lbf)	502	(113)
Max. Cont. Force [Passive cooling/ Fan / Fluid]	N	(lbf)	84 / 110 / 160	(19 / 26 / 36)
Max. Border Force relative	%		100	
Force Constant 1	N/A_{pk}	(lbf/A_{pk})	33	(7.42)
Force Constant 2	N/A_{rms}	(lbf/A_{rms})	46.7	(10.5)
Velocity				
Max. Velocity @ 1x230VAC	m/s	(in/s)	5.4	(219.9)
Max. Velocity @ 3x400VAC	m/s	(in/s)	9.5	(9.5)
Position Detection				
Repeatability	mm	(in)	±0.05	(±0.002)
Linearity	%		± 0.35	
Electrical Data				
Max. Current @ 1x230VAC	A_{pk} / A_{rms}		15.1 / 10.6	
Max. Current @ 3x400VAC	A_{pk} / A_{rms}		15.1 / 10.6	
Max. Cont. Current 1 [Passive cooling /Fan / Fluid]	A_{pk}		2.6 / 3.5 / 4.9	
Max. Cont. Current 2 [Passive cooling /Fan / Fluid]	A_{rms}		1.8 / 2.4 / 3.5	
Thermal Data				
Max. Winding Temperature (Sensor)	°C		90	
Thermal Resistance [Passive cooling / Fan / Fluid]	°K/W		1.6 / 0.86 / 0.43	
Thermal Time Constant [Passive cooling / Fan / Fluid]	s		1200 / 650 / 320	
Mechanical Data				
Slider Length	mm	(in)	620	(24)
Slider Mass	g	(lb)	2720	(5.98)

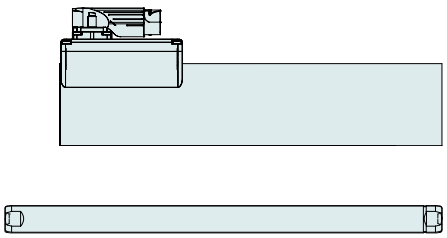

Item	Description	Item-No.
PS10-54x180U-BL-TU	Stator 3x400VAC, LinMot Encoder	0150-2723
PS10-54x120U-BL-TU-D24	Stator 3x400VAC, A/B Encoder, Pt1000	0150-2749
PS10-54x120U-BL-TU-D25	Stator 3x400VAC, A/B Encoder, PTC	0150-2753
PS10-54x120U-BL-TU-D25S	Stator 3x400VAC, A/B Encoder 5um, PTC	0150-2783
PL01-28x620/540	Slider 'standard'	0150-1383

P10-54x180U/370-BL-TU

Max. Stroke: 370 mm
Peak Force: 502 N

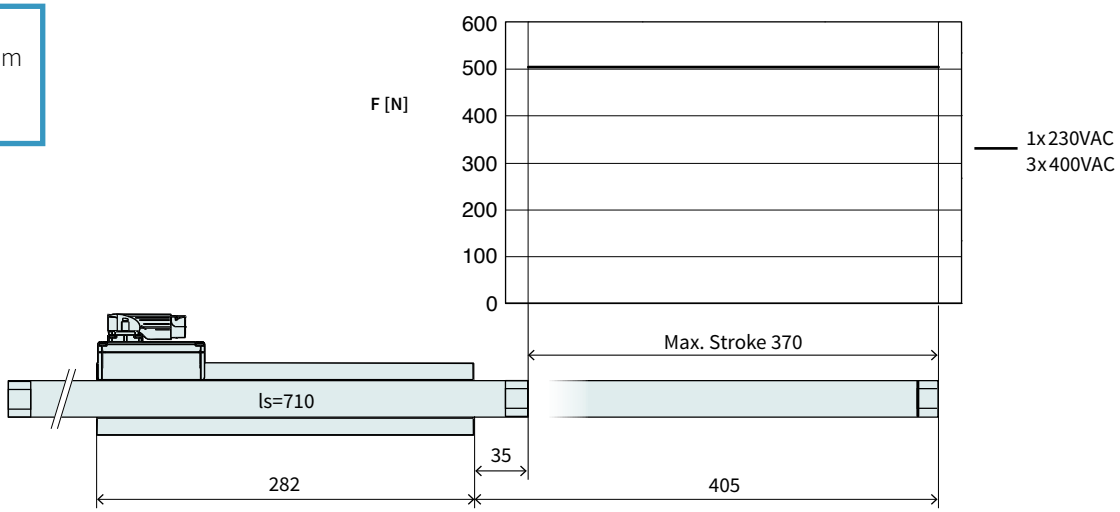

Dimensions in mm

Technical Data P10-54x180U/370				
Stroke				
Max. Stroke	mm	(in)	370	(14.59)
Force				
Max. Force @ 1x230VAC	N	(lbf)	502	(113)
Max. Force @ 3x400VAC	N	(lbf)	502	(113)
Max. Cont. Force [Passive cooling/ Fan / Fluid]	N	(lbf)	84 / 110 / 160	(19 / 26 / 36)
Max. Border Force relative	%		100	
Force Constant 1	N/A_{pk}	(lbf/A_{pk})	33	(7.42)
Force Constant 2	N/A_{rms}	(lbf/A_{rms})	46.7	(10.5)
Velocity				
Max. Velocity @ 1x230VAC	m/s	(in/s)	5.4	(219.9)
Max. Velocity @ 3x400VAC	m/s	(in/s)	9.5	(9.5)
Position Detection				
Repeatability	mm	(in)	±0.05	(±0.002)
Linearity	%		± 0.3	
Electrical Data				
Max. Current @ 1x230VAC	A_{pk} / A_{rms}		15.1 / 10.6	
Max. Current @ 3x400VAC	A_{pk} / A_{rms}		15.1 / 10.6	
Max. Cont. Current 1 [Passive cooling /Fan / Fluid]	A_{pk}		2.6 / 3.5 / 4.9	
Max. Cont. Current 2 [Passive cooling /Fan / Fluid]	A_{rms}		1.8 / 2.4 / 3.5	
Thermal Data				
Max. Winding Temperature (Sensor)	°C		90	
Thermal Resistance [Passive cooling / Fan / Fluid]	°K/W		1.6 / 0.86 / 0.43	
Thermal Time Constant [Passive cooling / Fan / Fluid]	s		1200 / 650 / 320	
Mechanical Data				
Slider Length	mm	(in)	710	(28)
Slider Mass	g	(lb)	3140	(6.91)

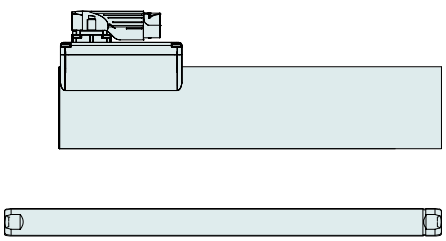

Item	Description	Item-No.
PS10-54x180U-BL-TU	Stator 3x400VAC, LinMot Encoder	0150-2723
PS10-54x120U-BL-TU-D24	Stator 3x400VAC, A/B Encoder, Pt1000	0150-2749
PS10-54x120U-BL-TU-D25	Stator 3x400VAC, A/B Encoder, PTC	0150-2753
PS10-54x120U-BL-TU-D25S	Stator 3x400VAC, A/B Encoder 5um, PTC	0150-2783
PL01-28x710/630	Slider 'standard'	0150-1384

P10-54x180U/460-BL-TU

Max. Stroke: 460 mm
Peak Force: 502 N

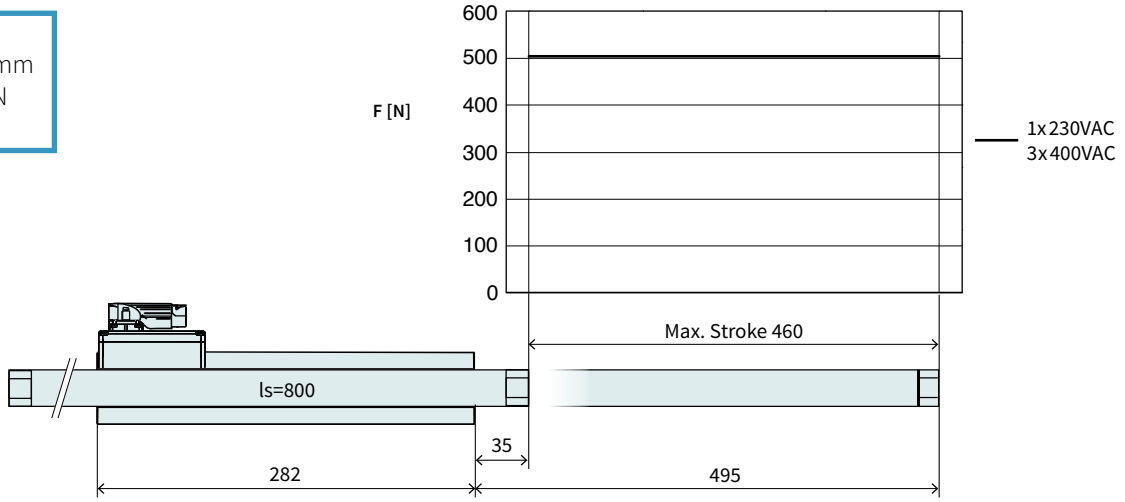

Dimensions in mm

Technical Data P10-54x180U/460				
Stroke				
Max. Stroke	mm	(in)	460	(18.1)
Force				
Max. Force @ 1x230VAC	N	(lbf)	502	(113)
Max. Force @ 3x400VAC	N	(lbf)	502	(113)
Max. Cont. Force [Passive cooling/ Fan / Fluid]	N	(lbf)	84 / 110 / 160	(19 / 26 / 36)
Max. Border Force relative	%		100	
Force Constant 1	N/A_{pk}	(lbf/A_{pk})	33	(7.42)
Force Constant 2	N/A_{rms}	(lbf/A_{rms})	46.7	(10.5)
Velocity				
Max. Velocity @ 1x230VAC	m/s	(in/s)	5.4	(219.9)
Max. Velocity @ 3x400VAC	m/s	(in/s)	9.5	(9.5)
Position Detection				
Repeatability	mm	(in)	±0.05	(±0.002)
Linearity	%		± 0.25	
Electrical Data				
Max. Current @ 1x230VAC	A_{pk} / A_{rms}		15.1 / 10.6	
Max. Current @ 3x400VAC	A_{pk} / A_{rms}		15.1 / 10.6	
Max. Cont. Current 1 [Passive cooling /Fan / Fluid]	A_{pk}		2.6 / 3.5 / 4.9	
Max. Cont. Current 2 [Passive cooling /Fan / Fluid]	A_{rms}		1.8 / 2.4 / 3.5	
Thermal Data				
Max. Winding Temperature (Sensor)	°C		90	
Thermal Resistance [Passive cooling / Fan / Fluid]	°K/W		1.6 / 0.86 / 0.43	
Thermal Time Constant [Passive cooling / Fan / Fluid]	s		1200 / 650 / 320	
Mechanical Data				
Slider Length	mm	(in)	800	(31)
Slider Mass	g	(lb)	3560	(7.83)

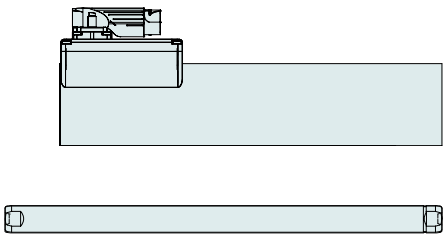

Item	Description	Item-No.
PS10-54x180U-BL-TU	Stator 3x400VAC, LinMot Encoder	0150-2723
PS10-54x120U-BL-TU-D24	Stator 3x400VAC, A/B Encoder, Pt1000	0150-2749
PS10-54x120U-BL-TU-D25	Stator 3x400VAC, A/B Encoder, PTC	0150-2753
PS10-54x120U-BL-TU-D25S	Stator 3x400VAC, A/B Encoder 5um, PTC	0150-2783
PL01-28x800/720	Slider 'standard'	0150-1385

P10-54x180U/580-BL-TU

Max. Stroke: 580 mm
Peak Force: 502 N

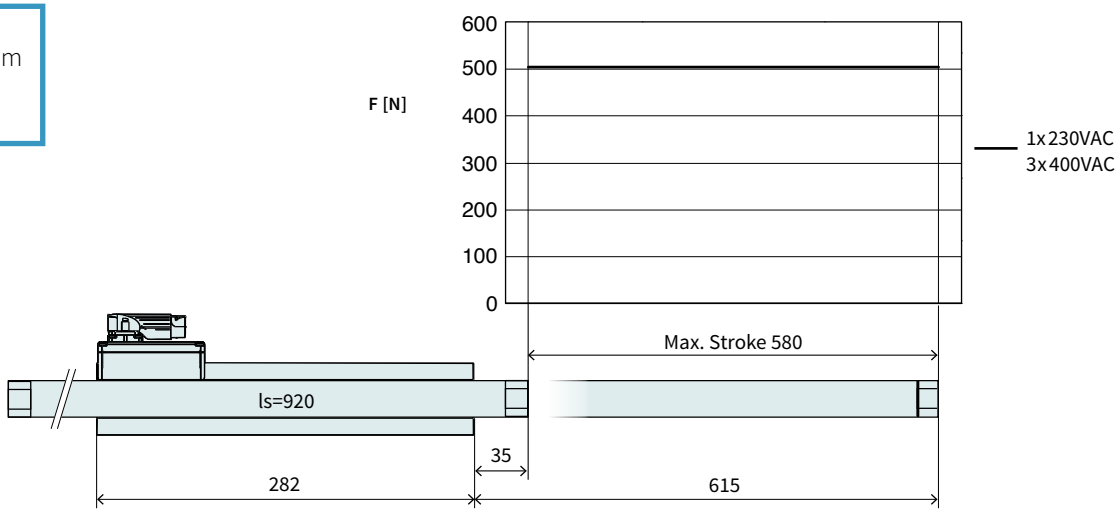

Dimensions in mm

Technical Data P10-54x180U/580				
Stroke				
Max. Stroke	mm	(in)	580	(22.8)
Force				
Max. Force @ 1x230VAC	N	(lbf)	502	(113)
Max. Force @ 3x400VAC	N	(lbf)	502	(113)
Max. Cont. Force [Passive cooling/ Fan / Fluid]	N	(lbf)	84 / 110 / 160	(19 / 26 / 36)
Max. Border Force relative	%		100	
Force Constant 1	N/A_{pk}	(lbf/A_{pk})	33	(7.42)
Force Constant 2	N/A_{rms}	(lbf/A_{rms})	46.7	(10.5)
Velocity				
Max. Velocity @ 1x230VAC	m/s	(in/s)	5.4	(219.9)
Max. Velocity @ 3x400VAC	m/s	(in/s)	9.5	(9.5)
Position Detection				
Repeatability	mm	(in)	±0.05	(±0.002)
Linearity	%		± 0.25	
Electrical Data				
Max. Current @ 1x230VAC	A_{pk} / A_{rms}		15.1 / 10.6	
Max. Current @ 3x400VAC	A_{pk} / A_{rms}		15.1 / 10.6	
Max. Cont. Current 1 [Passive cooling /Fan / Fluid]	A_{pk}		2.6 / 3.5 / 4.9	
Max. Cont. Current 2 [Passive cooling /Fan / Fluid]	A_{rms}		1.8 / 2.4 / 3.5	
Thermal Data				
Max. Winding Temperature (Sensor)	°C		90	
Thermal Resistance [Passive cooling / Fan / Fluid]	°K/W		1.6 / 0.86 / 0.43	
Thermal Time Constant [Passive cooling / Fan / Fluid]	s		1200 / 650 / 320	
Mechanical Data				
Slider Length	mm	(in)	920	(36)
Slider Mass	g	(lb)	4120	(9.06)

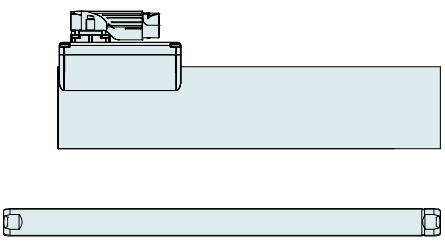

Item	Description	Item-No.
PS10-54x180U-BL-TU	Stator 3x400VAC, LinMot Encoder	0150-2723
PS10-54x120U-BL-TU-D24	Stator 3x400VAC, A/B Encoder, Pt1000	0150-2749
PS10-54x120U-BL-TU-D25	Stator 3x400VAC, A/B Encoder, PTC	0150-2753
PS10-54x120U-BL-TU-D25S	Stator 3x400VAC, A/B Encoder 5um, PTC	0150-2783
PL01-28x920/840	Slider 'standard'	0150-1386

P10-54x180U/670-BL-TU

Max. Stroke: 670 mm
Peak Force: 502 N

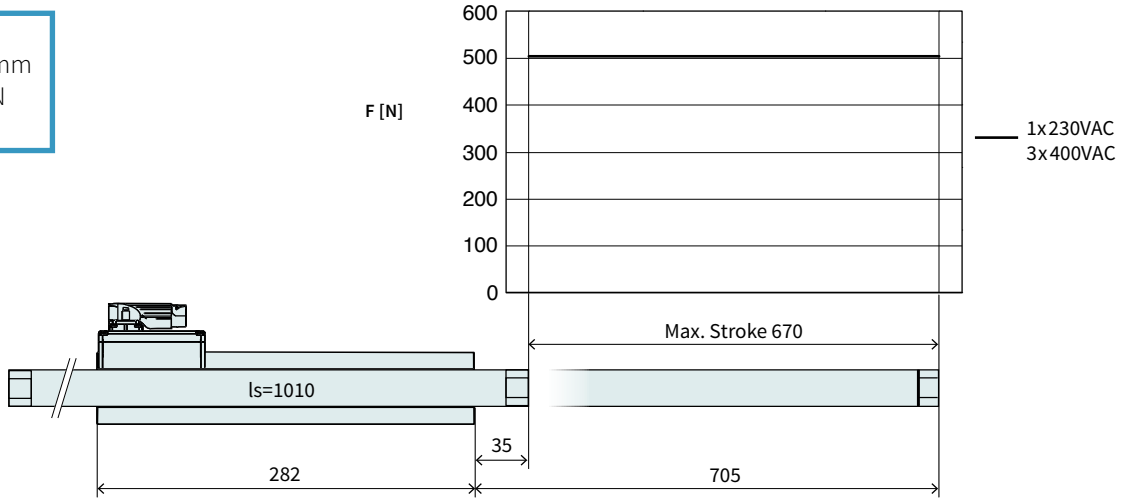

Dimensions in mm

Technical Data P10-54x180U/670				
Stroke				
Max. Stroke	mm	(in)	670	(26.39)
Force				
Max. Force @ 1x230VAC	N	(lbf)	502	(113)
Max. Force @ 3x400VAC	N	(lbf)	502	(113)
Max. Cont. Force [Passive cooling/ Fan / Fluid]	N	(lbf)	84 / 110 / 160	(19 / 26 / 36)
Max. Border Force relative	%		100	
Force Constant 1	N/A_{pk}	(lbf/A_{pk})	33	(7.42)
Force Constant 2	N/A_{rms}	(lbf/A_{rms})	46.7	(10.5)
Velocity				
Max. Velocity @ 1x230VAC	m/s	(in/s)	5.4	(219.9)
Max. Velocity @ 3x400VAC	m/s	(in/s)	9.5	(9.5)
Position Detection				
Repeatability	mm	(in)	±0.05	(±0.002)
Linearity	%		± 0.2	
Electrical Data				
Max. Current @ 1x230VAC	A_{pk} / A_{rms}		15.1 / 10.6	
Max. Current @ 3x400VAC	A_{pk} / A_{rms}		15.1 / 10.6	
Max. Cont. Current 1 [Passive cooling /Fan / Fluid]	A_{pk}		2.6 / 3.5 / 4.9	
Max. Cont. Current 2 [Passive cooling /Fan / Fluid]	A_{rms}		1.8 / 2.4 / 3.5	
Thermal Data				
Max. Winding Temperature (Sensor)	°C		90	
Thermal Resistance [Passive cooling / Fan / Fluid]	°K/W		1.6 / 0.86 / 0.43	
Thermal Time Constant [Passive cooling / Fan / Fluid]	s		1200 / 650 / 320	
Mechanical Data				
Slider Length	mm	(in)	1010	(40)
Slider Mass	g	(lb)	4540	(10)

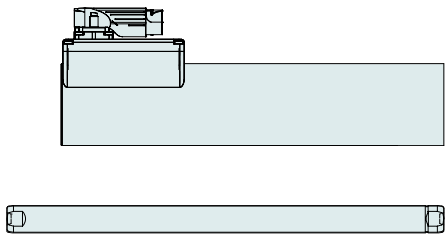

Item	Description	Item-No.
PS10-54x180U-BL-TU	Stator 3x400VAC, LinMot Encoder	0150-2723
PS10-54x120U-BL-TU-D24	Stator 3x400VAC, A/B Encoder, Pt1000	0150-2749
PS10-54x120U-BL-TU-D25	Stator 3x400VAC, A/B Encoder, PTC	0150-2753
PS10-54x120U-BL-TU-D25S	Stator 3x400VAC, A/B Encoder 5um, PTC	0150-2783
PL01-28x1010/930	Slider 'standard'	0150-1387

P10-54x180U/880-BL-TU

Max. Stroke: 880 mm
Peak Force: 502 N

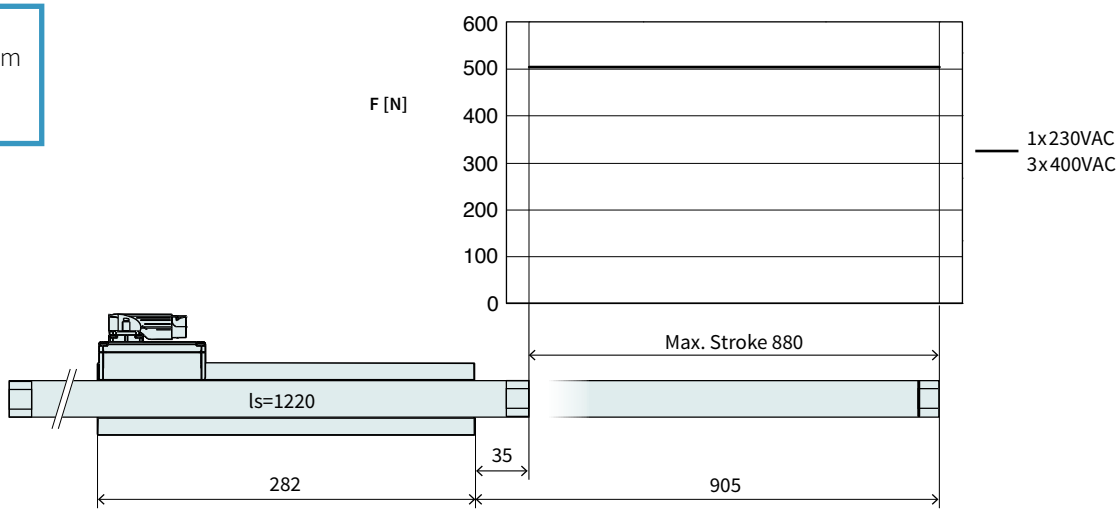

Dimensions in mm

Technical Data P10-54x180U/880				
Stroke				
Max. Stroke	mm	(in)	880	(34.6)
Force				
Max. Force @ 1x230VAC	N	(lbf)	502	(113)
Max. Force @ 3x400VAC	N	(lbf)	502	(113)
Max. Cont. Force [Passive cooling/ Fan / Fluid]	N	(lbf)	84 / 110 / 160	(19 / 26 / 36)
Max. Border Force relative	%		100	
Force Constant 1	N/A_{pk}	(lbf/A_{pk})	33	(7.42)
Force Constant 2	N/A_{rms}	(lbf/A_{rms})	46.7	(10.5)
Velocity				
Max. Velocity @ 1x230VAC	m/s	(in/s)	5.4	(219.9)
Max. Velocity @ 3x400VAC	m/s	(in/s)	9.5	(9.5)
Position Detection				
Repeatability	mm	(in)	±0.05	(±0.002)
Linearity	%		± 0.2	
Electrical Data				
Max. Current @ 1x230VAC	A_{pk} / A_{rms}		15.1 / 10.6	
Max. Current @ 3x400VAC	A_{pk} / A_{rms}		15.1 / 10.6	
Max. Cont. Current 1 [Passive cooling /Fan / Fluid]	A_{pk}		2.6 / 3.5 / 4.9	
Max. Cont. Current 2 [Passive cooling /Fan / Fluid]	A_{rms}		1.8 / 2.4 / 3.5	
Thermal Data				
Max. Winding Temperature (Sensor)	°C		90	
Thermal Resistance [Passive cooling / Fan / Fluid]	°K/W		1.6 / 0.86 / 0.43	
Thermal Time Constant [Passive cooling / Fan / Fluid]	s		1200 / 650 / 320	
Mechanical Data				
Slider Length	mm	(in)	1220	(48)
Slider Mass	g	(lb)	5510	(12.12)

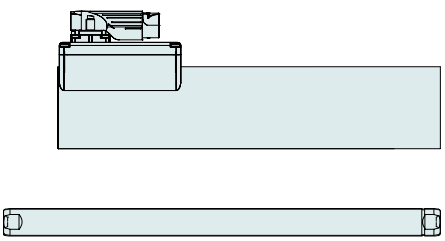

Item	Description	Item-No.
PS10-54x180U-BL-TU	Stator 3x400VAC, LinMot Encoder	0150-2723
PS10-54x120U-BL-TU-D24	Stator 3x400VAC, A/B Encoder, Pt1000	0150-2749
PS10-54x120U-BL-TU-D25	Stator 3x400VAC, A/B Encoder, PTC	0150-2753
PS10-54x120U-BL-TU-D25S	Stator 3x400VAC, A/B Encoder 5um, PTC	0150-2783
PL01-28x1220/1140	Slider 'standard'	0150-1388

P10-54x180U/1060-BL-TU

Max. Stroke: 1060 mm
Peak Force: 502 N

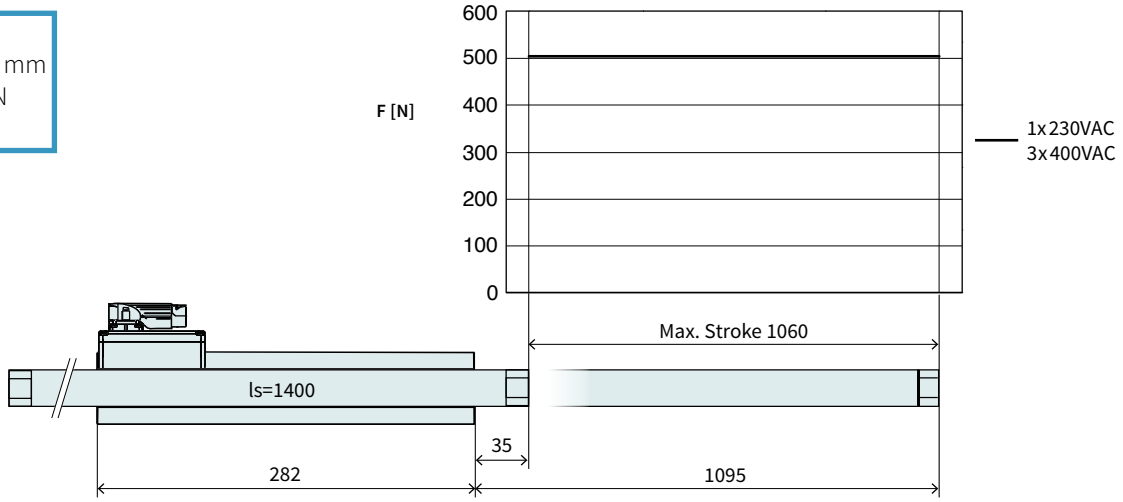

Dimensions in mm

Technical Data P10-54x180U/1060				
Stroke				
Max. Stroke	mm	(in)	1060	(41.7)
Force				
Max. Force @ 1x230VAC	N	(lbf)	502	(113)
Max. Force @ 3x400VAC	N	(lbf)	502	(113)
Max. Cont. Force [Passive cooling/ Fan / Fluid]	N	(lbf)	84 / 110 / 160	(19 / 26 / 36)
Max. Border Force relative	%		100	
Force Constant 1	N/A_{pk}	(lbf/A_{pk})	33	(7.42)
Force Constant 2	N/A_{rms}	(lbf/A_{rms})	46.7	(10.5)
Velocity				
Max. Velocity @ 1x230VAC	m/s	(in/s)	5.4	(219.9)
Max. Velocity @ 3x400VAC	m/s	(in/s)	9.5	(9.5)
Position Detection				
Repeatability	mm	(in)	±0.05	(±0.002)
Linearity	%		± 0.15	
Electrical Data				
Max. Current @ 1x230VAC	A_{pk} / A_{rms}		15.1 / 10.6	
Max. Current @ 3x400VAC	A_{pk} / A_{rms}		15.1 / 10.6	
Max. Cont. Current 1 [Passive cooling /Fan / Fluid]	A_{pk}		2.6 / 3.5 / 4.9	
Max. Cont. Current 2 [Passive cooling /Fan / Fluid]	A_{rms}		1.8 / 2.4 / 3.5	
Thermal Data				
Max. Winding Temperature (Sensor)	°C		90	
Thermal Resistance [Passive cooling / Fan / Fluid]	°K/W		1.6 / 0.86 / 0.43	
Thermal Time Constant [Passive cooling / Fan / Fluid]	s		1200 / 650 / 320	
Mechanical Data				
Slider Length	mm	(in)	1400	(55)
Slider Mass	g	(lb)	6350	(13.97)

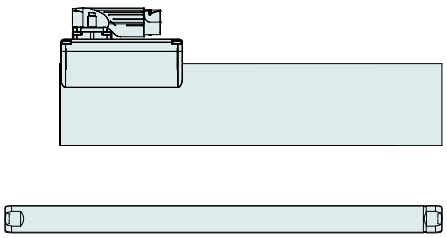

Item	Description	Item-No.
PS10-54x180U-BL-TU	Stator 3x400VAC, LinMot Encoder	0150-2723
PS10-54x120U-BL-TU-D24	Stator 3x400VAC, A/B Encoder, Pt1000	0150-2749
PS10-54x120U-BL-TU-D25	Stator 3x400VAC, A/B Encoder, PTC	0150-2753
PS10-54x120U-BL-TU-D25S	Stator 3x400VAC, A/B Encoder 5um, PTC	0150-2783
PL01-28x1400/1320	Slider 'standard'	0150-1389

P10-54x180U/1270-BL-TU

Max. Stroke: 1270 mm
Peak Force: 502 N

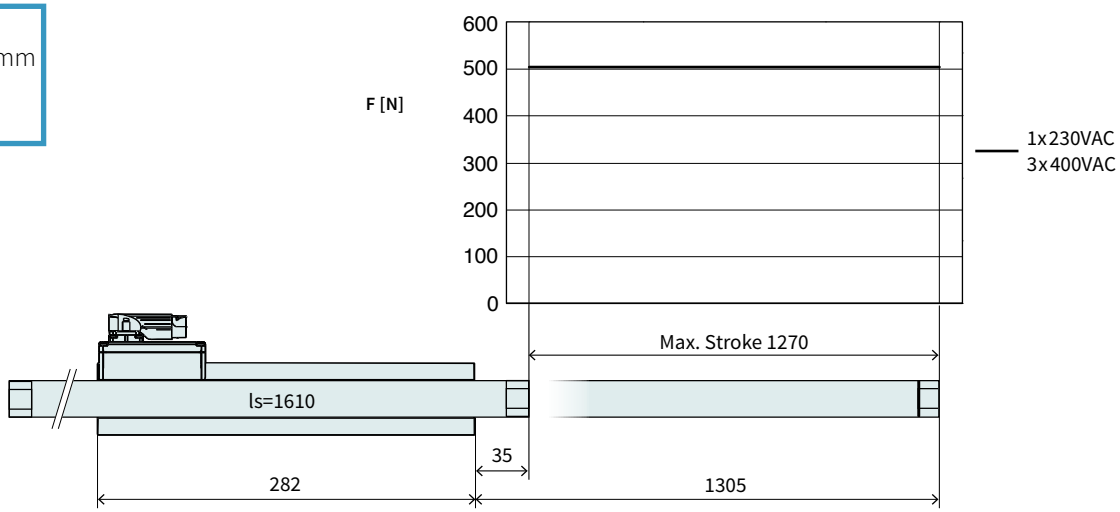

Dimensions in mm

Technical Data P10-54x180U/1270				
Stroke				
Max. Stroke	mm	(in)	1270	(49.99)
Force				
Max. Force @ 1x230VAC	N	(lbf)	502	(113)
Max. Force @ 3x400VAC	N	(lbf)	502	(113)
Max. Cont. Force [Passive cooling/ Fan / Fluid]	N	(lbf)	84 / 110 / 160	(19 / 26 / 36)
Max. Border Force relative	%		100	
Force Constant 1	N/A_{pk}	(lbf/A_{pk})	33	(7.42)
Force Constant 2	N/A_{rms}	(lbf/A_{rms})	46.7	(10.5)
Velocity				
Max. Velocity @ 1x230VAC	m/s	(in/s)	5.4	(219.9)
Max. Velocity @ 3x400VAC	m/s	(in/s)	9.5	(9.5)
Position Detection				
Repeatability	mm	(in)	±0.05	(±0.002)
Linearity	%		± 0.15	
Electrical Data				
Max. Current @ 1x230VAC	A_{pk} / A_{rms}		15.1 / 10.6	
Max. Current @ 3x400VAC	A_{pk} / A_{rms}		15.1 / 10.6	
Max. Cont. Current 1 [Passive cooling /Fan / Fluid]	A_{pk}		2.6 / 3.5 / 4.9	
Max. Cont. Current 2 [Passive cooling /Fan / Fluid]	A_{rms}		1.8 / 2.4 / 3.5	
Thermal Data				
Max. Winding Temperature (Sensor)	°C		90	
Thermal Resistance [Passive cooling / Fan / Fluid]	°K/W		1.6 / 0.86 / 0.43	
Thermal Time Constant [Passive cooling / Fan / Fluid]	s		1200 / 650 / 320	
Mechanical Data				
Slider Length	mm	(in)	1610	(63)
Slider Mass	g	(lb)	7330	(16.13)

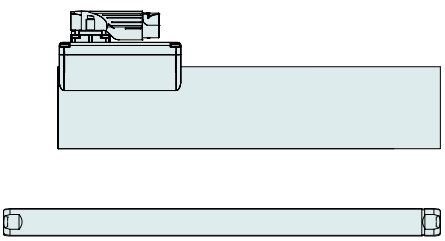

Item	Description	Item-No.
PS10-54x180U-BL-TU	Stator 3x400VAC, LinMot Encoder	0150-2723
PS10-54x120U-BL-TU-D24	Stator 3x400VAC, A/B Encoder, Pt1000	0150-2749
PS10-54x120U-BL-TU-D25	Stator 3x400VAC, A/B Encoder, PTC	0150-2753
PS10-54x120U-BL-TU-D25S	Stator 3x400VAC, A/B Encoder 5um, PTC	0150-2783
PL01-28x1610/1530	Slider 'standard'	0150-1390

P10-54x180U/1480-BL-TU

Max. Stroke: 1480 mm
Peak Force: 502 N

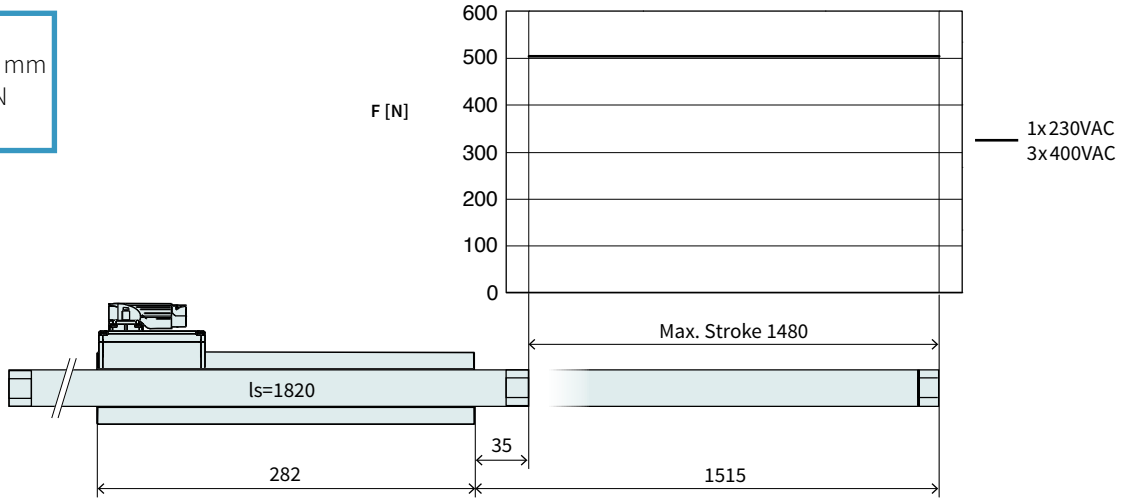

Dimensions in mm

Technical Data P10-54x180U/1480				
Stroke				
Max. Stroke	mm	(in)	1480	(58.29)
Force				
Max. Force @ 1x230VAC	N	(lbf)	502	(113)
Max. Force @ 3x400VAC	N	(lbf)	502	(113)
Max. Cont. Force [Passive cooling/ Fan / Fluid]	N	(lbf)	84 / 110 / 160	(19 / 26 / 36)
Max. Border Force relative	%		100	
Force Constant 1	N/A_{pk}	(lbf/A_{pk})	33	(7.42)
Force Constant 2	N/A_{rms}	(lbf/A_{rms})	46.7	(10.5)
Velocity				
Max. Velocity @ 1x230VAC	m/s	(in/s)	5.4	(219.9)
Max. Velocity @ 3x400VAC	m/s	(in/s)	9.5	(9.5)
Position Detection				
Repeatability	mm	(in)	±0.05	(±0.002)
Linearity	%		± 0.15	
Electrical Data				
Max. Current @ 1x230VAC	A_{pk} / A_{rms}		15.1 / 10.6	
Max. Current @ 3x400VAC	A_{pk} / A_{rms}		15.1 / 10.6	
Max. Cont. Current 1 [Passive cooling /Fan / Fluid]	A_{pk}		2.6 / 3.5 / 4.9	
Max. Cont. Current 2 [Passive cooling /Fan / Fluid]	A_{rms}		1.8 / 2.4 / 3.5	
Thermal Data				
Max. Winding Temperature (Sensor)	°C		90	
Thermal Resistance [Passive cooling / Fan / Fluid]	°K/W		1.6 / 0.86 / 0.43	
Thermal Time Constant [Passive cooling / Fan / Fluid]	s		1200 / 650 / 320	
Mechanical Data				
Slider Length	mm	(in)	1820	(72)
Slider Mass	g	(lb)	8300	(18.26)

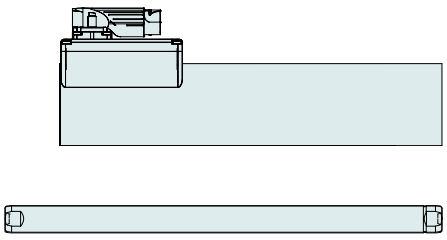

Item	Description	Item-No.
PS10-54x180U-BL-TU	Stator 3x400VAC, LinMot Encoder	0150-2723
PS10-54x120U-BL-TU-D24	Stator 3x400VAC, A/B Encoder, Pt1000	0150-2749
PS10-54x120U-BL-TU-D25	Stator 3x400VAC, A/B Encoder, PTC	0150-2753
PS10-54x120U-BL-TU-D25S	Stator 3x400VAC, A/B Encoder 5um, PTC	0150-2783
PL01-28x1820/1740	Slider 'standard'	0150-1395

P10-54x180U/1660-BL-TU

Max. Stroke: 1660 mm
Peak Force: 502 N

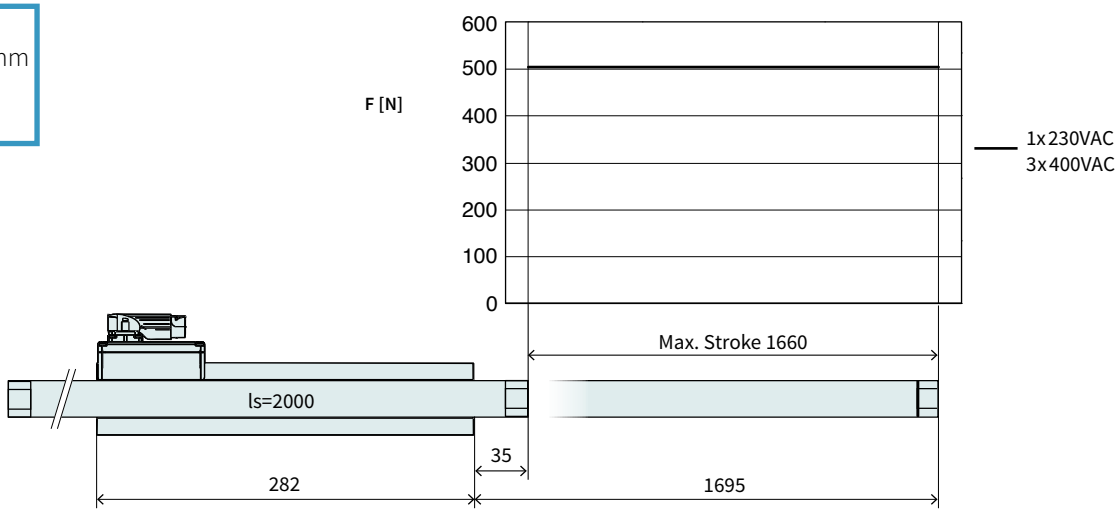

Dimensions in mm

Technical Data P10-54x180U/1660				
Stroke				
Max. Stroke	mm	(in)	1660	(65.4)
Force				
Max. Force @ 1x230VAC	N	(lbf)	502	(113)
Max. Force @ 3x400VAC	N	(lbf)	502	(113)
Max. Cont. Force [Passive cooling/ Fan / Fluid]	N	(lbf)	84 / 110 / 160	(19 / 26 / 36)
Max. Border Force relative	%		100	
Force Constant 1	N/A_{pk}	(lbf/A_{pk})	33	(7.42)
Force Constant 2	N/A_{rms}	(lbf/A_{rms})	46.7	(10.5)
Velocity				
Max. Velocity @ 1x230VAC	m/s	(in/s)	5.4	(219.9)
Max. Velocity @ 3x400VAC	m/s	(in/s)	9.5	(9.5)
Position Detection				
Repeatability	mm	(in)	±0.05	(±0.002)
Linearity	%		± 0.15	
Electrical Data				
Max. Current @ 1x230VAC	A_{pk} / A_{rms}		15.1 / 10.6	
Max. Current @ 3x400VAC	A_{pk} / A_{rms}		15.1 / 10.6	
Max. Cont. Current 1 [Passive cooling /Fan / Fluid]	A_{pk}		2.6 / 3.5 / 4.9	
Max. Cont. Current 2 [Passive cooling /Fan / Fluid]	A_{rms}		1.8 / 2.4 / 3.5	
Thermal Data				
Max. Winding Temperature (Sensor)	°C		90	
Thermal Resistance [Passive cooling / Fan / Fluid]	°K/W		1.6 / 0.86 / 0.43	
Thermal Time Constant [Passive cooling / Fan / Fluid]	s		1200 / 650 / 320	
Mechanical Data				
Slider Length	mm	(in)	2000	(79)
Slider Mass	g	(lb)	9140	(20.11)

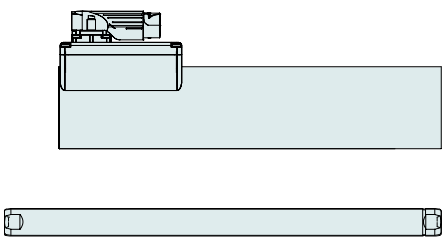

Item	Description	Item-No.
PS10-54x180U-BL-TU	Stator 3x400VAC, LinMot Encoder	0150-2723
PS10-54x120U-BL-TU-D24	Stator 3x400VAC, A/B Encoder, Pt1000	0150-2749
PS10-54x120U-BL-TU-D25	Stator 3x400VAC, A/B Encoder, PTC	0150-2753
PS10-54x120U-BL-TU-D25S	Stator 3x400VAC, A/B Encoder 5um, PTC	0150-2783
PL01-28x2000/1920	Slider 'standard'	0150-1396

Motor Cable

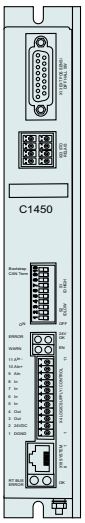

C1400

B Connector MC10-B/m

Tk Connector MC10-Tk/f

Power Trailing Chain Cable KPS

Encoder Trailing Chain Cable KSS

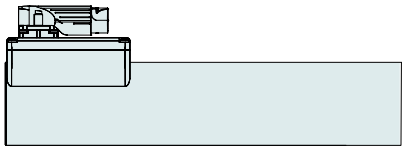

P10-54x180U

D15s Connector MC01-D15s-45°/f

Uk Connector MC10-Uk/f



E1400

L Connector MC10-L/m

Tk Connector MC10-Tk/f

Power Trailing Chain Cable KPS

Encoder Trailing Chain Cable KSS

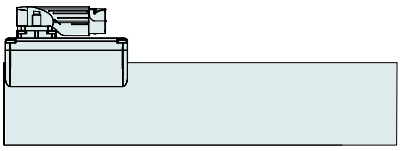

P10-54x180U

D15s Connector MC01-D15s-45°/f

Uk Connector MC10-Uk/f

ORDERING INFORMATION

TRAILING CHAIN CABLE FOR LINMOT DRIVES		
Item	**Description**	**Item-No.**
KPS07-04/02-L/Tk-3	Power Trailing Chain Cable E1400/P10-54, 3 m	0150-2670
KPS07-04/02-L/Tk-5	Power Trailing Chain Cable E1400/P10-54, 5 m	0150-2671
KPS07-04/02-L/Tk-8	Power Trailing Chain Cable E1400/P10-54, 8 m	0150-2672
KPS07-04/02-L/Tk-12	Power Trailing Chain Cable E1400/P10-54, 12 m	0150-2673
KPS07-04/02-B/Tk-3	Power Trailing Chain Cable C1400/P10-54, 3 m	0150-3648
KPS07-04/02-B/Tk-5	Power Trailing Chain Cable C1400/P10-54, 5 m	0150-3657
KPS07-04/02-B/Tk-8	Power Trailing Chain Cable C1400/P10-54, 8 m	0150-3658
KPS07-04/02-B/Tk-12	Power Trailing Chain Cable C1400/P10-54, 12 m	0150-3659
KSS 05-02/08-D15s/Uk-3	Encoder Trailing Chain Cable D15s/Uk, 3 m	0150-2650
KSS 05-02/08-D15s/Uk-5	Encoder Trailing Chain Cable D15s/Uk, 5 m	0150-2651
KSS 05-02/08-D15s/Uk-8	Encoder Trailing Chain Cable D15s/Uk, 8 m	0150-2652
KSS 05-02/08-D15s/Uk-12	Encoder Trailing Chain Cable D15s/Uk, 12 m	0150-2653

TRAILING CHAIN CABLES FOR THIRD PARTY DRIVES		
Item	**Description**	**Item-No.**
KPS07-04/02-./Tk-10	Power Trailing Chain Cable .../Tk, 10 m	0150-3626
KPS07-04/02-./Tk-	Power Trailing Chain Cable .../Tk, Custom length	0150-3622
KSS 05-02/13-./Uk-10	Encoder Trailing Chain Cable ./Uk, 10 m	0150-3627
KSS 05-02/13-./Uk-	Encoder Trailing Chain Cable ./Uk, Custom length	0150-3619

CONNECTOR & CABLE (INDIVIDUAL)		
Item	**Description**	**Item-No.**
MC10-L/m	Connector Power E1400/X2	0150-3382
MC01-D15/f	Motor Connector D15 (f)	0150-3136
MC10-Tk/f	Connector Power PS10-54	0150-3482
MC10-Uk/f	Connector Encoder PS10-54	0150-3483
KPS07-04/02	Power Trailing Chain Cable P10-54 (per m)	0150-2372
KSS05-02/08	Trailing Chain Cable Encoder LinMot (per m)	0150-2258
KSS05-02/13	Trailing Chain Cable Encoder P10-...-Dxx (per m)	0150-2259

MOTOR FLANGES



Item	Description	Item-No.
PF10-54x200	Flange for PS10-54x180	0150-2734

FIND MORE PRODUCT DETAILS IN THE CHAPTER "ACCESSORIES".

FANS



Item	Description	Item-No.
HV01-37/48	Fan cooling for H01-37/48 &PF02-37/48	0150-5051

FIND MORE PRODUCT DETAILS IN THE CHAPTER "ACCESSORIES".

SLIDER MOUNTING



Item	Description	Item-No.
PLF01-28	Fixed Bearing Set for 27/28 mm sliders	0150-3087
PLF01-28-SS	Fixed Bearing Set for 27/28 mm sliders, stainless steel	0150-3297
PLL01-28	Floating Bearing for 28 mm sliders	0150-3094
PLM01-28-MK	Mounting Kit for 28 mm sliders	0150-3095

FIND MORE PRODUCT DETAILS IN THE CHAPTER "ACCESSORIES".

BEARING KIT

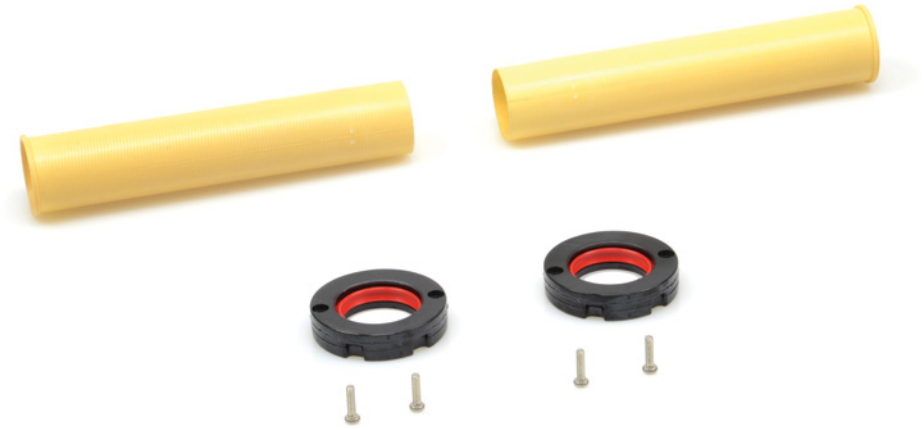

Item	Description	Item-No.
PB10-54x180-L	Bearing Kit for PS10-54x180	0150-3672

FIND MORE PRODUCT DETAILS IN THE CHAPTER "ACCESSORIES".

EXTERNAL POSITION SENSORS



Item	Description	Item-No.
MS01-1/D	Linear Encoder 1µm, A/B (for incremental strip)	0150-1840
MB01-1000	Magnetic incremental strip for MS01-1/D, per cm	0150-1963
KS025-D15/D-Encoder	Encoder Cable (Length in m)	0150-3168

FIND MORE PRODUCT DETAILS IN THE CHAPTER "ACCESSORIES".



Item	Description	Item-No.
MS01-1/D-SSI	Linear Encoder 1µm, A/B (for absolute strip)	0150-2095
MB01-1000-ABS	Magnetic absolute strip for MS01-1/D-SSI (per cm)	0150-2096
EC01-ABS/ENC-12-S	MS01-1/D-SSI Encoder connector straight	0150-3616
KSS01-12-D15/ABS-ENC	Special cable for MS01-1/D-SSI on C1100/C1200/C1400/E1200/E1400 Drives	0150-3652

FIND MORE PRODUCT DETAILS IN THE CHAPTER "ACCESSORIES".

LINEAR MOTORS P10-54x240U



- 230VAC and 3 x 400VAC technology
- Peak forces up to 669 N
- LinMot Encoder or Incremental Encoder
- Extremely high dynamic
- Rotating push-pull TWIN connector for power and encoder cables
- Can also be controlled by standard third-party servo drives

4

LINEAR MOTORS P10-54x240U

Technical Data ____ **445**

Motor Specifications

P10-54x240U/10 ..... **450**
P10-54x240U/100 ..... **451**
P10-54x240U/220 ..... **452**
P10-54x240U/310 ..... **453**
P10-54x240U/400 ..... **454**
P10-54x240U/520 ..... **455**
P10-54x240U/610 ..... **456**
P10-54x240U/820 ..... **457**
P10-54x240U/1000 ..... **458**
P10-54x240U/1210 ..... **459**
P10-54x240U/1420 ..... **460**
P10-54x240U/1600 ..... **461**

Accessories ____ **462**



MOTOR FAMILY P10-54x240U

Technical Data				
Stroke				
Max. Stroke (ES)	mm	(in)	1600	(63)
Force				
Max. Force @ 1x230VAC	N	(lbf)	669	(150)
Max. Force @ 3x400VAC	N	(lbf)	669	(150)
Max. Cont. Force [Passive cooling/ Fan / Fluid]	N	(lbf)	110 / 150 / 210	(25 / 34 / 48)
Max. Border Force relative	%		100	
Force Constant 1	N/A_{pk}	(lbf/A_{pk})	44	(9.89)
Force Constant 2	N/A_{rms}	(lbf/A_{rms})	62.2	(14)
Velocity				
Max. Velocity @ 1x230VAC	m/s	(in/s)	4.1	(159.9)
Max. Velocity @ 3x400VAC	m/s	(in/s)	7.1	(279.9)
Position Detection				
Position Resolution	mm	(in)	0.007	(0.0003)
Repeatability	mm	(in)	±0.05	(±0.002)
Position Resolution with ES	mm	(in)	0.001	(0.00004)
Repeatability with ES	mm	(in)	±0.01	(±0.0004)
Linearity with ES	mm	(in)	±0.01	(±0.0004)
Electrical Data				
Max. Current @ 1x230VAC	A_{pk} / A_{rms}		15.1 / 10.6	
Max. Current @ 3x400VAC	A_{pk} / A_{rms}		15.1 / 10.6	
Max. Cont. Current 1 [Passive cooling /Fan / Fluid]	A_{pk}		2.5 / 3.5 / 4.9	
Max. Cont. Current 2 [Passive cooling /Fan / Fluid]	A_{rms}		1.8 / 2.4 / 3.4	
Back EMF Constant	V_{pk} / (m/s)	(V_{pk} / (in/s))	50.8	(1.29)
Terminal Resistance 25 °C / 120 °C	Ohm		7.5 / 10	
Terminal Inductivity	mH		6	
Magnetic Period	mm	(in)	60	(2.35)
Thermal Data				
Max. Winding Temperature (Sensor)	°C		90	
Thermal Resistance [Passive cooling / Fan / Fluid]	°K/W		1.3 / 0.65 / 0.33	
Thermal Time Constant [Passive cooling / Fan / Fluid]	s		1300 / 650 / 330	
Mechanical Data				
Stator Diameter	mm	(in)	54	(2.1)
Stator Length	mm	(in)	342	(13)
Stator Mass	g	(lb)	2710	(5.96)
Slider Diameter	mm	(in)	28	(1.1)
Slider Length	mm	(in)	410 - 2000	(16 - 79)
Slider Mass	g	(lb)	1740 - 9140	(3.83 - 20.11)
IP Code			IP 65	

STATOR

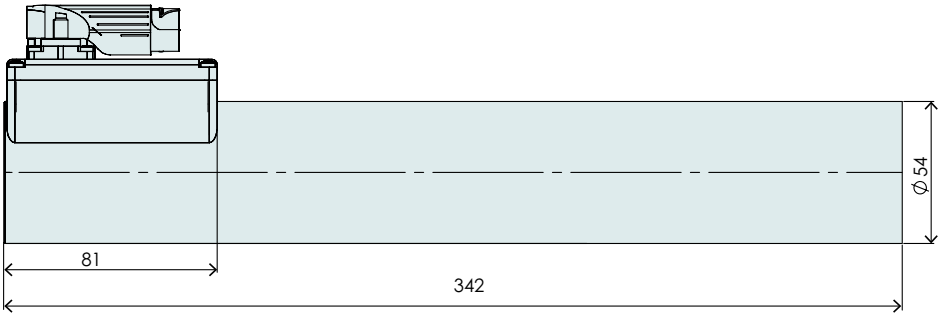

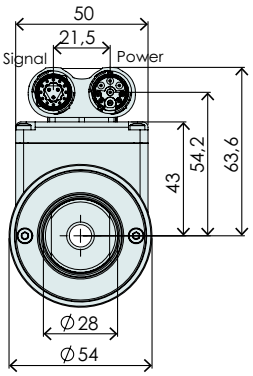

Item	Description	Item-No.
PS10-54x240U-BL-TU	Stator 3x400VAC, LinMot Encoder	0150-2724
PS10-54x240U-BL-TU-D24	Stator 3x400VAC, A/B Encoder, Pt1000	0150-2750
PS10-54x240U-BL-TU-D25	Stator 3x400VAC, A/B Encoder, PTC	0150-2754
PS10-54x240U-BL-TU-D25S	Stator 3x400VAC, A/B Encoder 5um, PTC	0150-2784

CONNECTOR PS10-54x240U-BL-TU

Motor Connector Wiring		Connector Encoder Uk	Wire Color Motor Cable
+Vcc	Supply	1	red
GND	Supply	2	black
Sin+	Encoder	3	yellow
Sin-	Encoder	4	orange
Cos+	Encoder	5	green
Cos-	Encoder	6	blue
Mot. Link C+	Communication	7	pink
Mot. Link C-	Communication	8	grey
n. c.	n. c.	9	n. c.
n. c.	n. c.	10	n. c.
n. c.	n. c.	11	n. c.
n. c.	n. c.	12	n. c.
n. c.	n. c.	A	n. c.
n. c.	n. c.	B	n. c.
n. c.	n. c.	C	n. c.

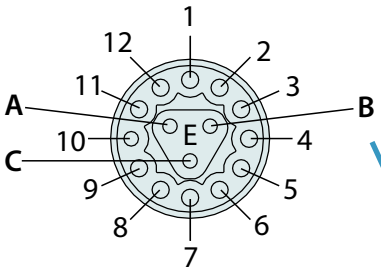

Connector Encoder Uk

View: Motor connector, plug side

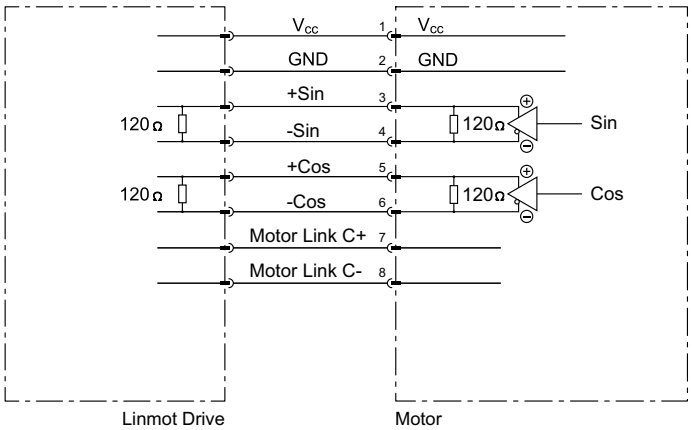

Motor Steckerbelegung	Connector Power Tk	Wire Color Motor Cable
Phase U	A	red
PE	PE	yellow-green
Phase V	B	blue
Phase W	C	green
n. c.	1	n. c.
n. c.	2	n. c.
n. c.	3	n. c.
n. c.	4	n. c.
n. c.	5	n. c.

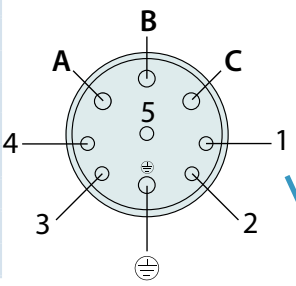

Connector Power Tk

View: Motor connector, plug side

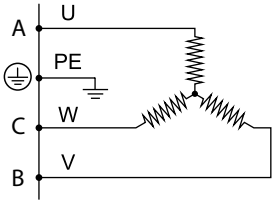

CONNECTOR PS10-54X240U-BL-TU-D24 / 25 / 25S

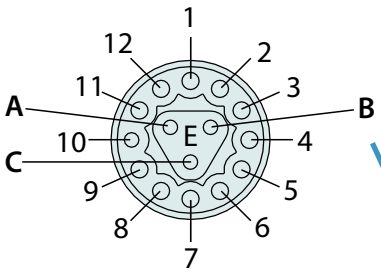

Connector Encoder Uk

View: Motor connector, plug side

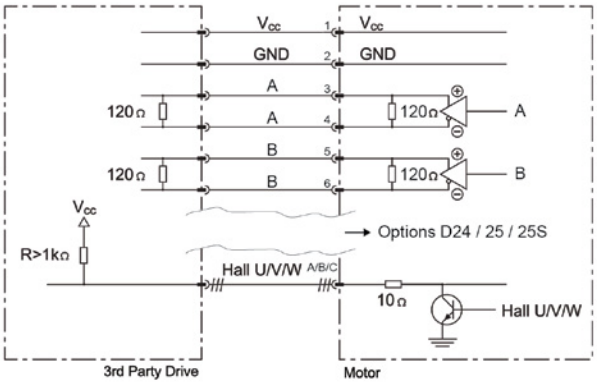

PS10-54x120U-BL-TU-D24

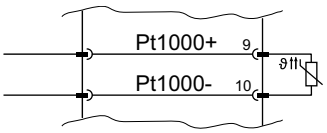

Pt1000 Characteristic emulated

PS10-54x120U-BL-TU-D25
PS10-54x120U-BL-TU-D25S

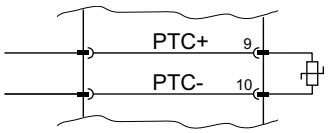

PTC (switching type)
350 Ω / 18 kΩ emulated[1]

Motor Connector Wiring				
PS10-54x240U-BL-TU-D24	PS10-54x240U-BL-TU-D25 PS10-54x240U-BL-TU-D25S	Function	Connector Encoder Uk	Wire Color Motor Cable
+Vcc	+Vcc	Supply	1	white
GND	GND	Supply	2	brown
A	A	Encoder	3	grey
/ A	/ A	Encoder	4	pink
B	B	Encoder	5	blue
/ B	/ B	Encoder	6	red
–	–	–	7	green (do not connect)
–	–	–	8	yellow (do not connect)
Pt1000+	PTC+	Temp.[2]	9	yellow-brown
Pt1000-	PTC-	Temp.[2]	10	white-yellow
REF+	REF+	Encoder	11	black
REF-	REF-	Encoder	12	purple
Hall U	Hall U	Encoder	A	grey-red
Hall V	Hall V	Encoder	B	red-blue
Hall W	Hall W	Encoder	C	white-green

1) under 350 Ω = no fault, over 18 kΩ = Fault
2) The temperature evaluation circiut must be powered from the encoder supply and must be at the same potential.
The grounds of the temperature evaluation circuit and the encoder have to be connected. The encoder must have been powered on for at least 50 ms, before valid temperatures can be measured. If the encoder is powered off, 20k Ohms are measured between Pins 9 and 10.

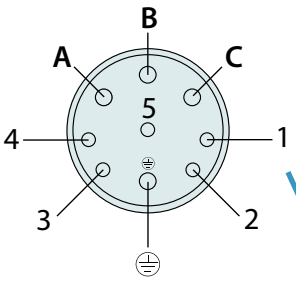

Connector Power Tk

View: Motor connector, plug side

PS10-54x240U-BL-TU-D24

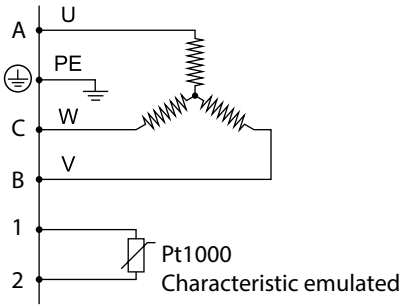

PS10-54x240U-BL-TU-D25
PS10-54x240U-BL-TU-D25S

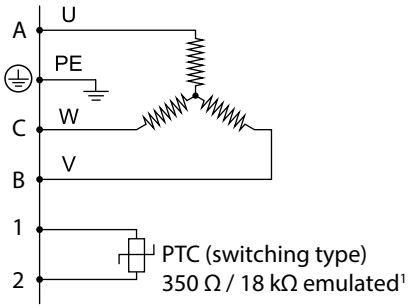

Motor Connector Wiring			
PS10-54x240U-BL-TU-D24	PS10-54x240U-BL-TU-D25 PS10-54x240U-BL-TU-D25S	Connector Power Tk	Wire Color Motor Cable
Phase U	Phase U	A	red
PE	PE	PE	yellow-green
Phase V	Phase V	B	blue
Phase W	Phase W	C	green
Pt1000+	PTC+	1	turquoise
Pt1000-	PTC-	2	grey
n. c.	n. c.	3	n. c.
n. c.	n. c.	4	n. c.
n. c.	n. c.	5	n. c.

1) under 350 Ω = no fault, over 18 Ω = Fault

SLIDER

Slider Standard

Number of grooves determines the slider type
(see chapter 2 / slider) and marks the front end.

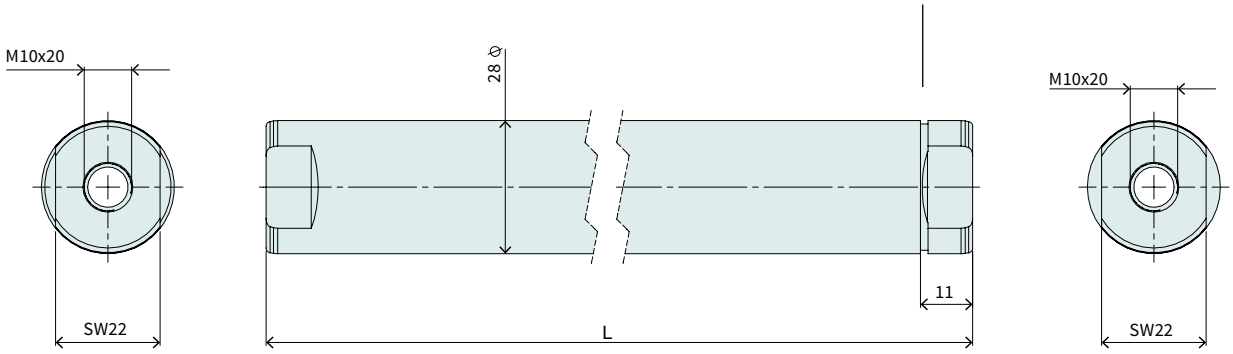

Slider Standard			
Item	**Description**	**Max. Stroke [mm]**	**Item-No.**
PL01-28x410/330	Slider 'standard'	10	0150-1381
PL01-28x500/420	Slider 'standard'	100	0150-1382
PL01-28x620/540	Slider 'standard'	220	0150-1383
PL01-28x710/630	Slider 'standard'	310	0150-1384
PL01-28x800/720	Slider 'standard'	400	0150-1385
PL01-28x920/840	Slider 'standard'	520	0150-1386
PL01-28x1010/930	Slider 'standard'	610	0150-1387
PL01-28x1220/1140	Slider 'standard'	820	0150-1388
PL01-28x1400/1320	Slider 'standard'	1000	0150-1389
PL01-28x1610/1530	Slider 'standard'	1210	0150-1390
PL01-28x1820/1740	Slider 'standard'	1420	0150-1395
PL01-28x2000/1920	Slider 'standard'	1600	0150-1396

P10-54x240U/10-BL-TU

Max. Stroke: 10 mm
Peak Force: 669 N

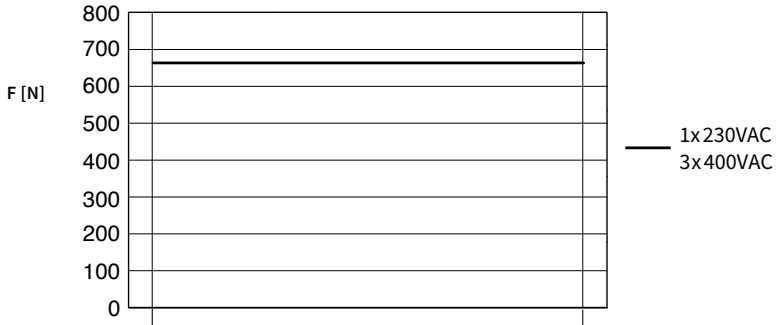

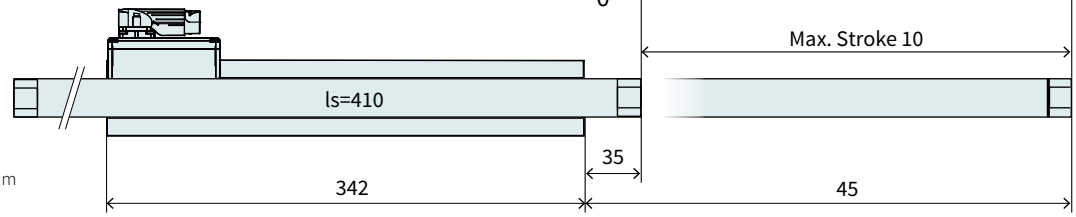

Dimensions in mm

Technical Data P10-54x240U/10				
Stroke				
Max. Stroke	mm	(in)	10	(0.39)
Force				
Max. Force @ 1x230VAC	N	(lbf)	669	(150)
Max. Force @ 3x400VAC	N	(lbf)	669	(150)
Max. Cont. Force [Passive cooling/ Fan / Fluid]	N	(lbf)	110 / 150 / 210	(25 / 34 / 48)
Max. Border Force relative	%		100	
Force Constant 1	N/A_{pk}	(lbf/A_{pk})	44	(9.89)
Force Constant 2	N/A_{rms}	(lbf/A_{rms})	62.2	(14)
Velocity				
Max. Velocity @ 1x230VAC	m/s	(in/s)	4.1	(159.9)
Max. Velocity @ 3x400VAC	m/s	(in/s)	7.1	(7.1)
Position Detection				
Repeatability	mm	(in)	±0.05	(±0.002)
Linearity	%		± 7.6	
Electrical Data				
Max. Current @ 1x230VAC	A_{pk} / A_{rms}		15.1 / 10.6	
Max. Current @ 3x400VAC	A_{pk} / A_{rms}		15.1 / 10.6	
Max. Cont. Current 1 [Passive cooling /Fan / Fluid]	A_{pk}		2.5 / 3.5 / 4.9	
Max. Cont. Current 2 [Passive cooling /Fan / Fluid]	A_{rms}		1.8 / 2.4 / 3.4	
Thermal Data				
Max. Winding Temperature (Sensor)	°C		90	
Thermal Resistance [Passive cooling / Fan / Fluid]	°K/W		1.3 / 0.65 / 0.33	
Thermal Time Constant [Passive cooling / Fan / Fluid]	s		1300 / 650 / 330	
Mechanical Data				
Slider Length	mm	(in)	410	(16)
Slider Mass	g	(lb)	1740	(3.83)

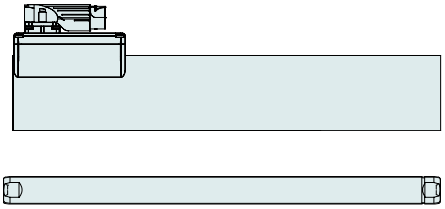

Item	Description	Item-No.
PS10-54x240U-BL-TU	Stator 3x400VAC, LinMot Encoder	0150-2724
PS10-54x240U-BL-TU-D24	Stator 3x400VAC, A/B Encoder, Pt1000	0150-2750
PS10-54x240U-BL-TU-D25	Stator 3x400VAC, A/B Encoder, PTC	0150-2754
PS10-54x240U-BL-TU-D25S	Stator 3x400VAC, A/B Encoder 5um, PTC	0150-2784
PL01-28x410/330	Slider 'standard'	0150-1381

P10-54x240U/100-BL-TU

Max. Stroke: 100 mm
Peak Force: 669 N

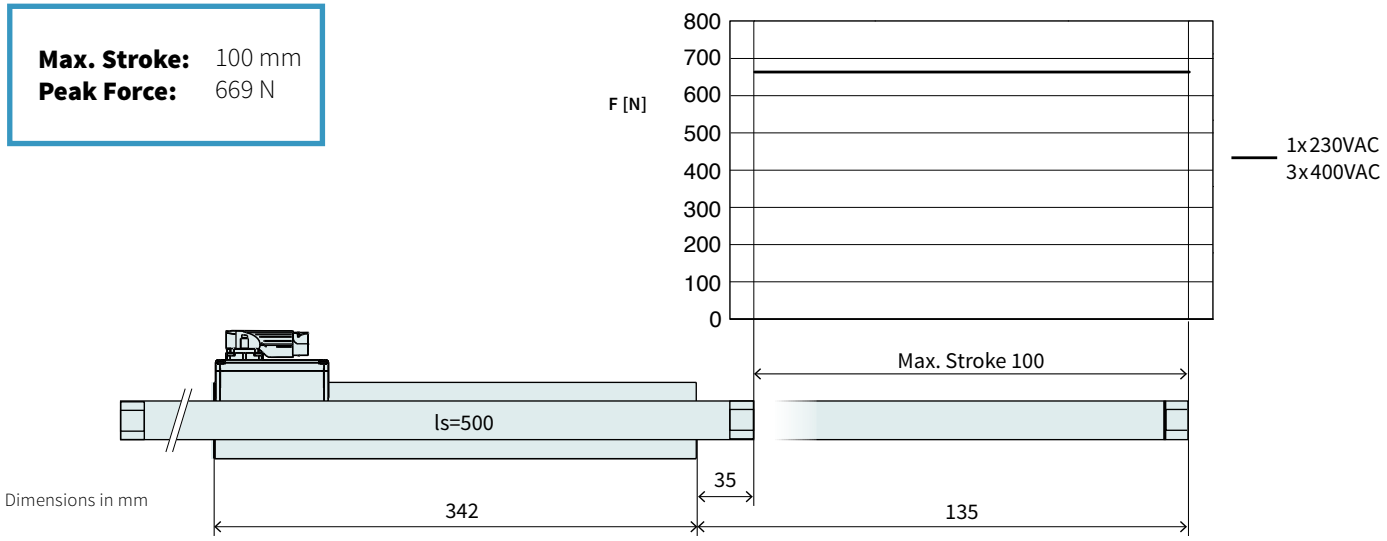

Technical Data P10-54x240U/100				
Stroke				
Max. Stroke	mm	(in)	100	(3.93)
Force				
Max. Force @ 1x230VAC	N	(lbf)	669	(150)
Max. Force @ 3x400VAC	N	(lbf)	669	(150)
Max. Cont. Force [Passive cooling/ Fan / Fluid]	N	(lbf)	110 / 150 / 210	(25 / 34 / 48)
Max. Border Force relative	%		100	
Force Constant 1	N/A_{pk}	(lbf/A_{pk})	44	(9.89)
Force Constant 2	N/A_{rms}	(lbf/A_{rms})	62.2	(14)
Velocity				
Max. Velocity @ 1x230VAC	m/s	(in/s)	4.1	(159.9)
Max. Velocity @ 3x400VAC	m/s	(in/s)	7.1	(7.1)
Position Detection				
Repeatability	mm	(in)	±0.05	(±0.002)
Linearity	%		± 0.85	
Electrical Data				
Max. Current @ 1x230VAC	A_{pk} / A_{rms}		15.1 / 10.6	
Max. Current @ 3x400VAC	A_{pk} / A_{rms}		15.1 / 10.6	
Max. Cont. Current 1 [Passive cooling /Fan / Fluid]	A_{pk}		2.5 / 3.5 / 4.9	
Max. Cont. Current 2 [Passive cooling /Fan / Fluid]	A_{rms}		1.8 / 2.4 / 3.4	
Thermal Data				
Max. Winding Temperature (Sensor)	°C		90	
Thermal Resistance [Passive cooling / Fan / Fluid]	°K/W		1.3 / 0.65 / 0.33	
Thermal Time Constant [Passive cooling / Fan / Fluid]	s		1300 / 650 / 330	
Mechanical Data				
Slider Length	mm	(in)	500	(20)
Slider Mass	g	(lb)	2160	(4.75)

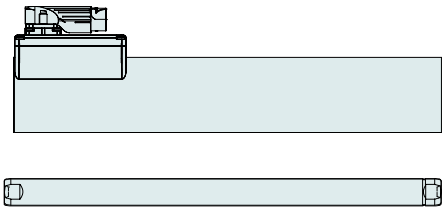

Item	Description	Item-No.
PS10-54x240U-BL-TU	Stator 3x400VAC, LinMot Encoder	0150-2724
PS10-54x240U-BL-TU-D24	Stator 3x400VAC, A/B Encoder, Pt1000	0150-2750
PS10-54x240U-BL-TU-D25	Stator 3x400VAC, A/B Encoder, PTC	0150-2754
PS10-54x240U-BL-TU-D25S	Stator 3x400VAC, A/B Encoder 5um, PTC	0150-2784
PL01-28x500/420	Slider 'standard'	0150-1382

P10-54x240U/220-BL-TU

Max. Stroke: 220 mm
Peak Force: 669 N

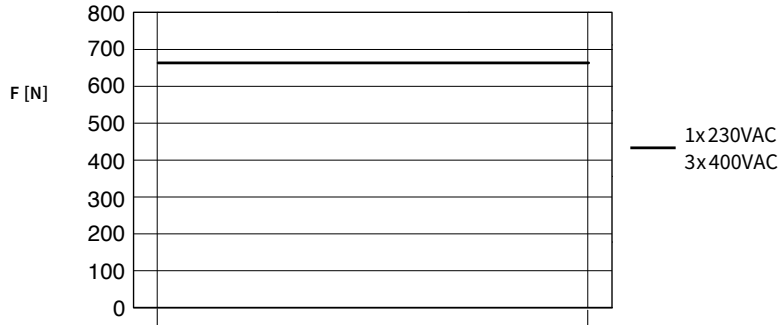

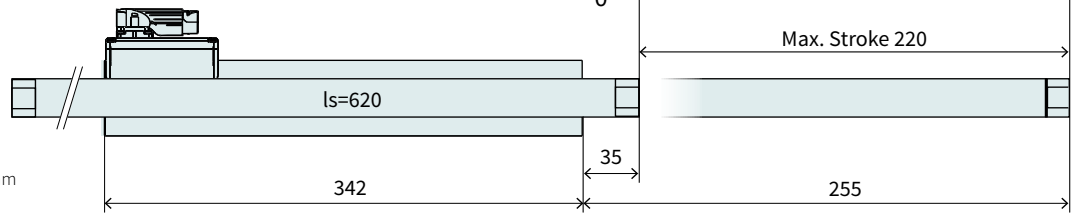

Dimensions in mm

Technical Data P10-54x240U/220				
Stroke				
Max. Stroke	mm	(in)	220	(8.65)
Force				
Max. Force @ 1x230VAC	N	(lbf)	669	(150)
Max. Force @ 3x400VAC	N	(lbf)	669	(150)
Max. Cont. Force [Passive cooling/ Fan / Fluid]	N	(lbf)	110 / 150 / 210	(25 / 34 / 48)
Max. Border Force relative	%		100	
Force Constant 1	N/A_{pk}	(lbf/A_{pk})	44	(9.89)
Force Constant 2	N/A_{rms}	(lbf/A_{rms})	62.2	(14)
Velocity				
Max. Velocity @ 1x230VAC	m/s	(in/s)	4.1	(159.9)
Max. Velocity @ 3x400VAC	m/s	(in/s)	7.1	(7.1)
Position Detection				
Repeatability	mm	(in)	±0.05	(±0.002)
Linearity	%		± 0.45	
Electrical Data				
Max. Current @ 1x230VAC	A_{pk} / A_{rms}		15.1 / 10.6	
Max. Current @ 3x400VAC	A_{pk} / A_{rms}		15.1 / 10.6	
Max. Cont. Current 1 [Passive cooling /Fan / Fluid]	A_{pk}		2.5 / 3.5 / 4.9	
Max. Cont. Current 2 [Passive cooling /Fan / Fluid]	A_{rms}		1.8 / 2.4 / 3.4	
Thermal Data				
Max. Winding Temperature (Sensor)	°C		90	
Thermal Resistance [Passive cooling / Fan / Fluid]	°K/W		1.3 / 0.65 / 0.33	
Thermal Time Constant [Passive cooling / Fan / Fluid]	s		1300 / 650 / 330	
Mechanical Data				
Slider Length	mm	(in)	620	(24)
Slider Mass	g	(lb)	2720	(5.98)

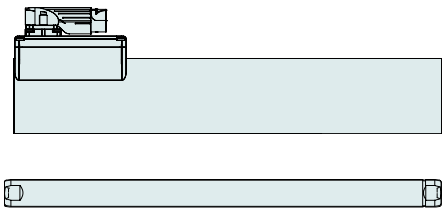

Item	Description	Item-No.
PS10-54x240U-BL-TU	Stator 3x400VAC, LinMot Encoder	0150-2724
PS10-54x240U-BL-TU-D24	Stator 3x400VAC, A/B Encoder, Pt1000	0150-2750
PS10-54x240U-BL-TU-D25	Stator 3x400VAC, A/B Encoder, PTC	0150-2754
PS10-54x240U-BL-TU-D25S	Stator 3x400VAC, A/B Encoder 5um, PTC	0150-2784
PL01-28x620/540	Slider 'standard'	0150-1383

P10-54x240U/310-BL-TU

Max. Stroke: 310 mm
Peak Force: 669 N

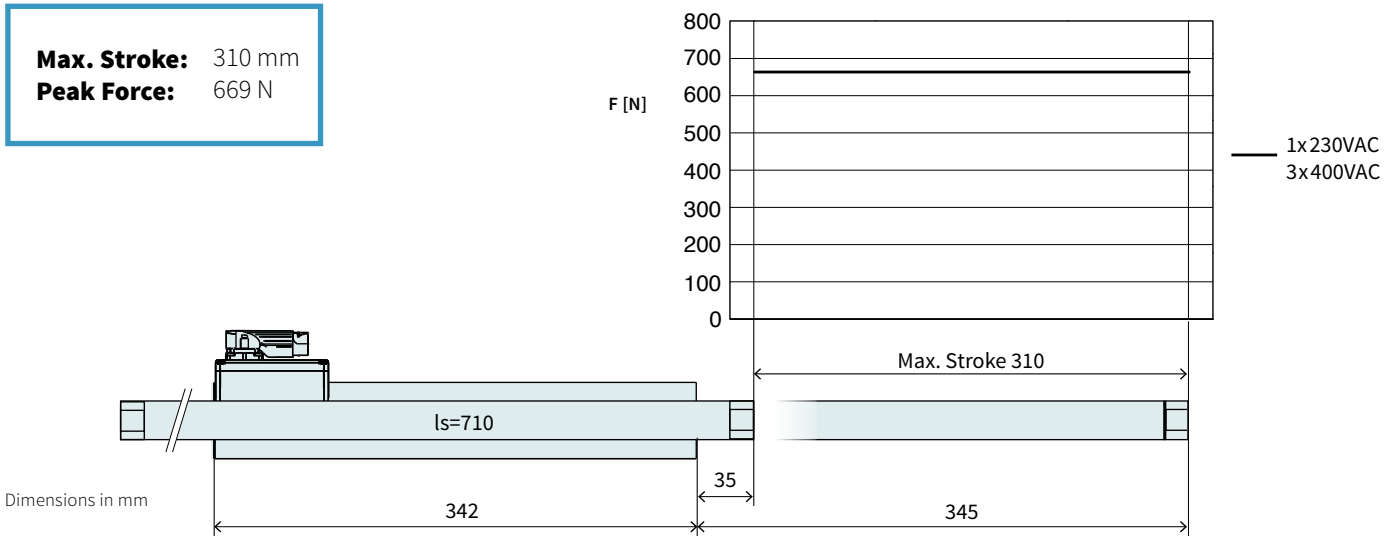

Dimensions in mm

Technical Data P10-54x240U/310				
Stroke				
Max. Stroke	mm	(in)	310	(12.19)
Force				
Max. Force @ 1x230VAC	N	(lbf)	669	(150)
Max. Force @ 3x400VAC	N	(lbf)	669	(150)
Max. Cont. Force [Passive cooling/ Fan / Fluid]	N	(lbf)	110 / 150 / 210	(25 / 34 / 48)
Max. Border Force relative	%		100	
Force Constant 1	N/A_{pk}	(lbf/A_{pk})	44	(9.89)
Force Constant 2	N/A_{rms}	(lbf/A_{rms})	62.2	(14)
Velocity				
Max. Velocity @ 1x230VAC	m/s	(in/s)	4.1	(159.9)
Max. Velocity @ 3x400VAC	m/s	(in/s)	7.1	(7.1)
Position Detection				
Repeatability	mm	(in)	±0.05	(±0.002)
Linearity	%		± 0.35	
Electrical Data				
Max. Current @ 1x230VAC	A_{pk} / A_{rms}		15.1 / 10.6	
Max. Current @ 3x400VAC	A_{pk} / A_{rms}		15.1 / 10.6	
Max. Cont. Current 1 [Passive cooling /Fan / Fluid]	A_{pk}		2.5 / 3.5 / 4.9	
Max. Cont. Current 2 [Passive cooling /Fan / Fluid]	A_{rms}		1.8 / 2.4 / 3.4	
Thermal Data				
Max. Winding Temperature (Sensor)	°C		90	
Thermal Resistance [Passive cooling / Fan / Fluid]	°K/W		1.3 / 0.65 / 0.33	
Thermal Time Constant [Passive cooling / Fan / Fluid]	s		1300 / 650 / 330	
Mechanical Data				
Slider Length	mm	(in)	710	(28)
Slider Mass	g	(lb)	3140	(6.91)

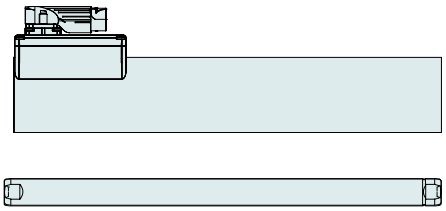

Item	Description	Item-No.
PS10-54x240U-BL-TU	Stator 3x400VAC, LinMot Encoder	0150-2724
PS10-54x240U-BL-TU-D24	Stator 3x400VAC, A/B Encoder, Pt1000	0150-2750
PS10-54x240U-BL-TU-D25	Stator 3x400VAC, A/B Encoder, PTC	0150-2754
PS10-54x240U-BL-TU-D25S	Stator 3x400VAC, A/B Encoder 5um, PTC	0150-2784
PL01-28x710/630	Slider 'standard'	0150-1384

P10-54x240U/400-BL-TU

Max. Stroke: 400 mm
Peak Force: 669 N

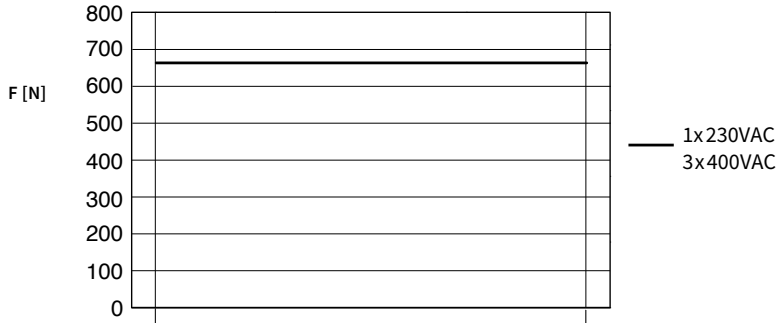

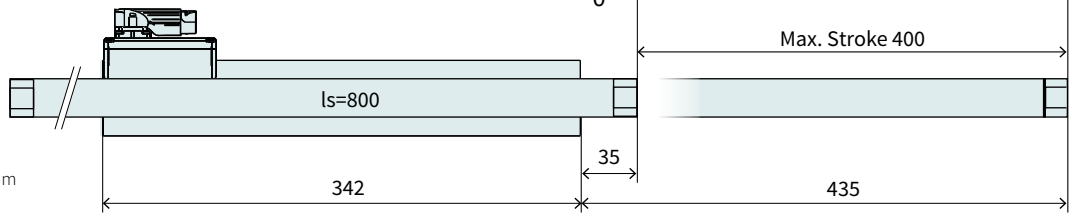

Dimensions in mm

Technical Data P10-54x240U/400				
Stroke				
Max. Stroke	mm	(in)	400	(15.69)
Force				
Max. Force @ 1x230VAC	N	(lbf)	669	(150)
Max. Force @ 3x400VAC	N	(lbf)	669	(150)
Max. Cont. Force [Passive cooling/ Fan / Fluid]	N	(lbf)	110 / 150 / 210	(25 / 34 / 48)
Max. Border Force relative	%		100	
Force Constant 1	N/A_{pk}	(lbf/A_{pk})	44	(9.89)
Force Constant 2	N/A_{rms}	(lbf/A_{rms})	62.2	(14)
Velocity				
Max. Velocity @ 1x230VAC	m/s	(in/s)	4.1	(159.9)
Max. Velocity @ 3x400VAC	m/s	(in/s)	7.1	(7.1)
Position Detection				
Repeatability	mm	(in)	±0.05	(±0.002)
Linearity	%		± 0.3	
Electrical Data				
Max. Current @ 1x230VAC	A_{pk} / A_{rms}		15.1 / 10.6	
Max. Current @ 3x400VAC	A_{pk} / A_{rms}		15.1 / 10.6	
Max. Cont. Current 1 [Passive cooling /Fan / Fluid]	A_{pk}		2.5 / 3.5 / 4.9	
Max. Cont. Current 2 [Passive cooling /Fan / Fluid]	A_{rms}		1.8 / 2.4 / 3.4	
Thermal Data				
Max. Winding Temperature (Sensor)	°C		90	
Thermal Resistance [Passive cooling / Fan / Fluid]	°K/W		1.3 / 0.65 / 0.33	
Thermal Time Constant [Passive cooling / Fan / Fluid]	s		1300 / 650 / 330	
Mechanical Data				
Slider Length	mm	(in)	800	(31)
Slider Mass	g	(lb)	3560	(7.83)

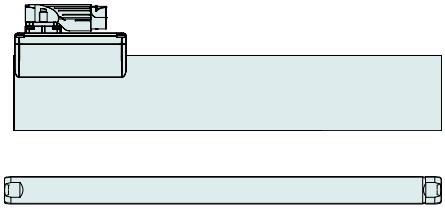

Item	Description	Item-No.
PS10-54x240U-BL-TU	Stator 3x400VAC, LinMot Encoder	0150-2724
PS10-54x240U-BL-TU-D24	Stator 3x400VAC, A/B Encoder, Pt1000	0150-2750
PS10-54x240U-BL-TU-D25	Stator 3x400VAC, A/B Encoder, PTC	0150-2754
PS10-54x240U-BL-TU-D25S	Stator 3x400VAC, A/B Encoder 5um, PTC	0150-2784
PL01-28x800/720	Slider 'standard'	0150-1385

P10-54x240U/520-BL-TU

Max. Stroke: 520 mm
Peak Force: 669 N

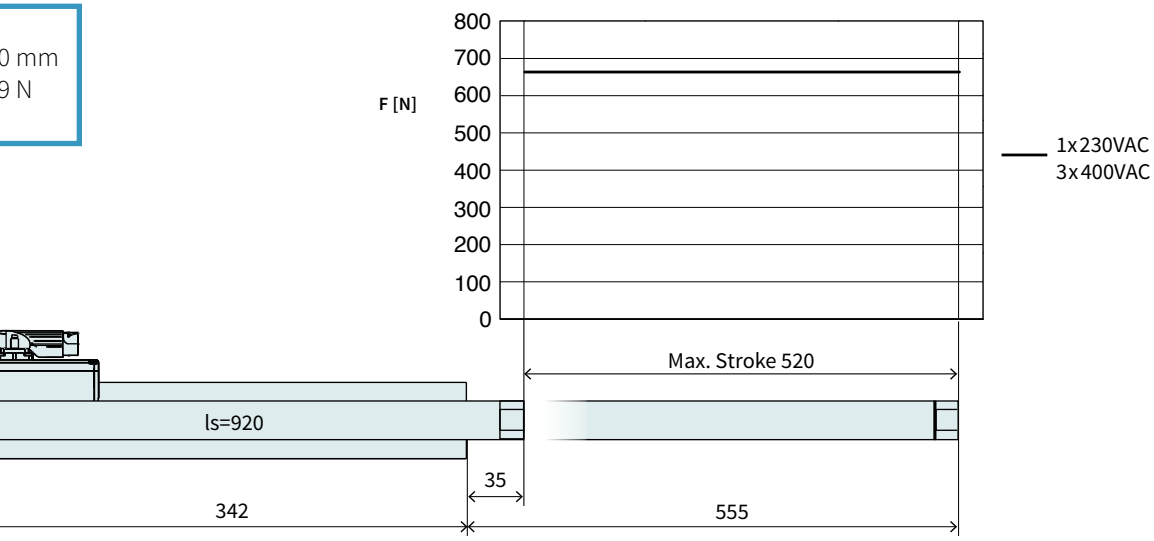

Dimensions in mm

Technical Data P10-54x240U/520				
Stroke				
Max. Stroke	mm	(in)	520	(20.49)
Force				
Max. Force @ 1x230VAC	N	(lbf)	669	(150)
Max. Force @ 3x400VAC	N	(lbf)	669	(150)
Max. Cont. Force [Passive cooling/ Fan / Fluid]	N	(lbf)	110 / 150 / 210	(25 / 34 / 48)
Max. Border Force relative	%		100	
Force Constant 1	N/A_{pk}	(lbf/A_{pk})	44	(9.89)
Force Constant 2	N/A_{rms}	(lbf/A_{rms})	62.2	(14)
Velocity				
Max. Velocity @ 1x230VAC	m/s	(in/s)	4.1	(159.9)
Max. Velocity @ 3x400VAC	m/s	(in/s)	7.1	(7.1)
Position Detection				
Repeatability	mm	(in)	±0.05	(±0.002)
Linearity	%		± 0.25	
Electrical Data				
Max. Current @ 1x230VAC	A_{pk} / A_{rms}		15.1 / 10.6	
Max. Current @ 3x400VAC	A_{pk} / A_{rms}		15.1 / 10.6	
Max. Cont. Current 1 [Passive cooling /Fan / Fluid]	A_{pk}		2.5 / 3.5 / 4.9	
Max. Cont. Current 2 [Passive cooling /Fan / Fluid]	A_{rms}		1.8 / 2.4 / 3.4	
Thermal Data				
Max. Winding Temperature (Sensor)	°C		90	
Thermal Resistance [Passive cooling / Fan / Fluid]	°K/W		1.3 / 0.65 / 0.33	
Thermal Time Constant [Passive cooling / Fan / Fluid]	s		1300 / 650 / 330	
Mechanical Data				
Slider Length	mm	(in)	920	(36)
Slider Mass	g	(lb)	4120	(9.06)

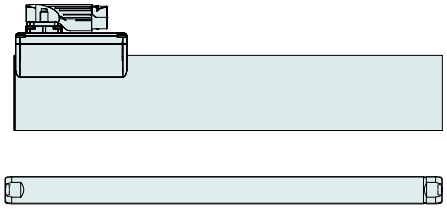

Item	Description	Item-No.
PS10-54x240U-BL-TU	Stator 3x400VAC, LinMot Encoder	0150-2724
PS10-54x240U-BL-TU-D24	Stator 3x400VAC, A/B Encoder, Pt1000	0150-2750
PS10-54x240U-BL-TU-D25	Stator 3x400VAC, A/B Encoder, PTC	0150-2754
PS10-54x240U-BL-TU-D25S	Stator 3x400VAC, A/B Encoder 5um, PTC	0150-2784
PL01-28x920/840	Slider 'standard'	0150-1386

P10-54x240U/610-BL-TU

Max. Stroke: 610 mm
Peak Force: 669 N

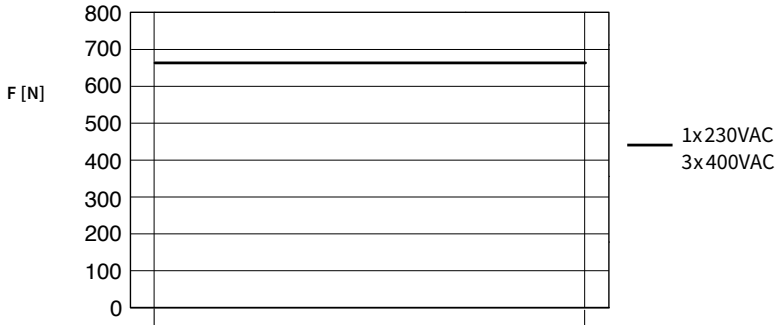

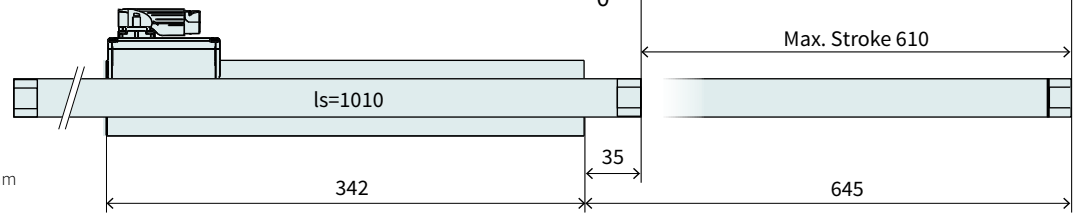

Dimensions in mm

Technical Data P10-54x240U/610				
Stroke				
Max. Stroke	mm	(in)	610	(23.99)
Force				
Max. Force @ 1x230VAC	N	(lbf)	669	(150)
Max. Force @ 3x400VAC	N	(lbf)	669	(150)
Max. Cont. Force [Passive cooling/ Fan / Fluid]	N	(lbf)	110 / 150 / 210	(25 / 34 / 48)
Max. Border Force relative	%		100	
Force Constant 1	N/A_{pk}	(lbf/A_{pk})	44	(9.89)
Force Constant 2	N/A_{rms}	(lbf/A_{rms})	62.2	(14)
Velocity				
Max. Velocity @ 1x230VAC	m/s	(in/s)	4.1	(159.9)
Max. Velocity @ 3x400VAC	m/s	(in/s)	7.1	(7.1)
Position Detection				
Repeatability	mm	(in)	±0.05	(±0.002)
Linearity	%		± 0.2	
Electrical Data				
Max. Current @ 1x230VAC	A_{pk} / A_{rms}		15.1 / 10.6	
Max. Current @ 3x400VAC	A_{pk} / A_{rms}		15.1 / 10.6	
Max. Cont. Current 1 [Passive cooling /Fan / Fluid]	A_{pk}		2.5 / 3.5 / 4.9	
Max. Cont. Current 2 [Passive cooling /Fan / Fluid]	A_{rms}		1.8 / 2.4 / 3.4	
Thermal Data				
Max. Winding Temperature (Sensor)	°C		90	
Thermal Resistance [Passive cooling / Fan / Fluid]	°K/W		1.3 / 0.65 / 0.33	
Thermal Time Constant [Passive cooling / Fan / Fluid]	s		1300 / 650 / 330	
Mechanical Data				
Slider Length	mm	(in)	1010	(40)
Slider Mass	g	(lb)	4540	(10)

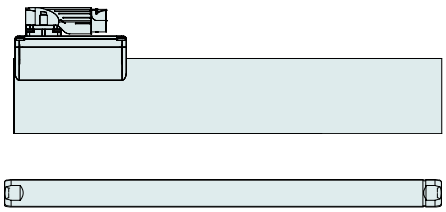

Item	Description	Item-No.
PS10-54x240U-BL-TU	Stator 3x400VAC, LinMot Encoder	0150-2724
PS10-54x240U-BL-TU-D24	Stator 3x400VAC, A/B Encoder, Pt1000	0150-2750
PS10-54x240U-BL-TU-D25	Stator 3x400VAC, A/B Encoder, PTC	0150-2754
PS10-54x240U-BL-TU-D25S	Stator 3x400VAC, A/B Encoder 5um, PTC	0150-2784
PL01-28x1010/930	Slider 'standard'	0150-1387

P10-54x240U/820-BL-TU

Max. Stroke: 820 mm
Peak Force: 669 N

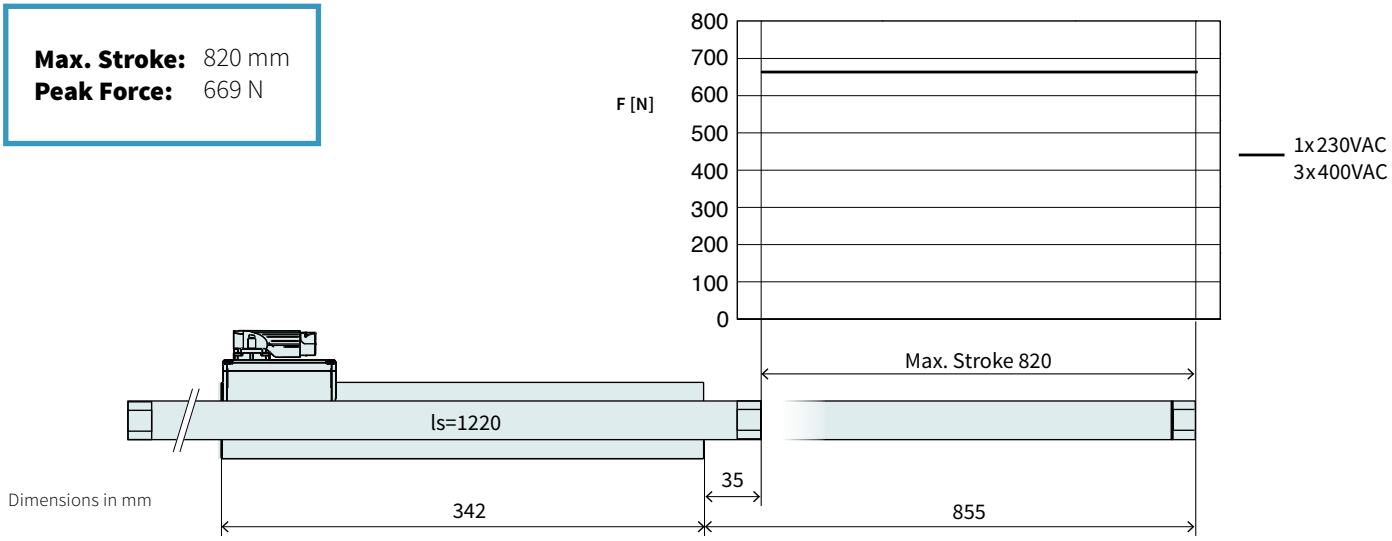

Technical Data P10-54x240U/820				
Stroke				
Max. Stroke	mm	(in)	820	(32.29)
Force				
Max. Force @ 1x230VAC	N	(lbf)	669	(150)
Max. Force @ 3x400VAC	N	(lbf)	669	(150)
Max. Cont. Force [Passive cooling/ Fan / Fluid]	N	(lbf)	110 / 150 / 210	(25 / 34 / 48)
Max. Border Force relative	%		100	
Force Constant 1	N/A_{pk}	(lbf/A_{pk})	44	(9.89)
Force Constant 2	N/A_{rms}	(lbf/A_{rms})	62.2	(14)
Velocity				
Max. Velocity @ 1x230VAC	m/s	(in/s)	4.1	(159.9)
Max. Velocity @ 3x400VAC	m/s	(in/s)	7.1	(7.1)
Position Detection				
Repeatability	mm	(in)	±0.05	(±0.002)
Linearity	%		± 0.2	
Electrical Data				
Max. Current @ 1x230VAC	A_{pk} / A_{rms}		15.1 / 10.6	
Max. Current @ 3x400VAC	A_{pk} / A_{rms}		15.1 / 10.6	
Max. Cont. Current 1 [Passive cooling /Fan / Fluid]	A_{pk}		2.5 / 3.5 / 4.9	
Max. Cont. Current 2 [Passive cooling /Fan / Fluid]	A_{rms}		1.8 / 2.4 / 3.4	
Thermal Data				
Max. Winding Temperature (Sensor)	°C		90	
Thermal Resistance [Passive cooling / Fan / Fluid]	°K/W		1.3 / 0.65 / 0.33	
Thermal Time Constant [Passive cooling / Fan / Fluid]	s		1300 / 650 / 330	
Mechanical Data				
Slider Length	mm	(in)	1220	(48)
Slider Mass	g	(lb)	5510	(12.12)

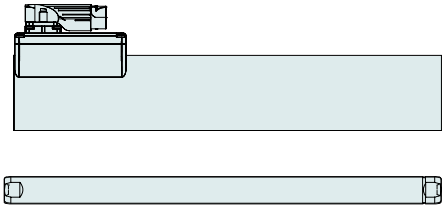

Item	Description	Item-No.
PS10-54x240U-BL-TU	Stator 3x400VAC, LinMot Encoder	0150-2724
PS10-54x240U-BL-TU-D24	Stator 3x400VAC, A/B Encoder, Pt1000	0150-2750
PS10-54x240U-BL-TU-D25	Stator 3x400VAC, A/B Encoder, PTC	0150-2754
PS10-54x240U-BL-TU-D25S	Stator 3x400VAC, A/B Encoder 5um, PTC	0150-2784
PL01-28x1220/1140	Slider 'standard'	0150-1388

P10-54x240U/1000-BL-TU

Max. Stroke: 1000 mm
Peak Force: 669 N

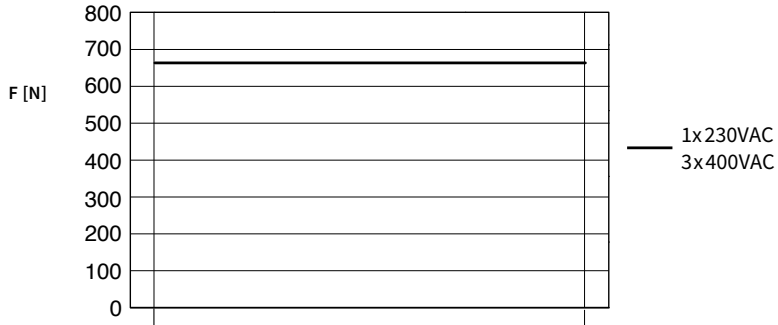

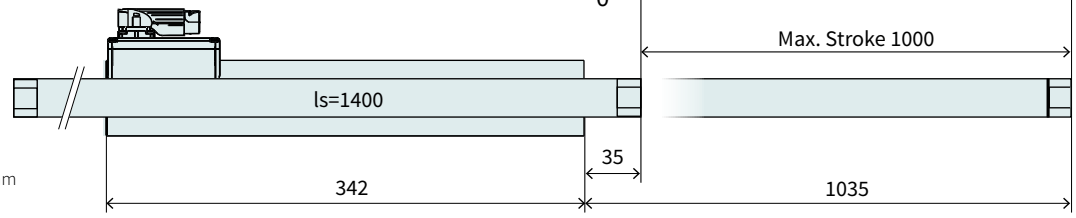

Dimensions in mm

Technical Data P10-54x240U/1000				
Stroke				
Max. Stroke	mm	(in)	1000	(39.39)
Force				
Max. Force @ 1x230VAC	N	(lbf)	669	(150)
Max. Force @ 3x400VAC	N	(lbf)	669	(150)
Max. Cont. Force [Passive cooling/ Fan / Fluid]	N	(lbf)	110 / 150 / 210	(25 / 34 / 48)
Max. Border Force relative	%		100	
Force Constant 1	N/A_{pk}	(lbf/A_{pk})	44	(9.89)
Force Constant 2	N/A_{rms}	(lbf/A_{rms})	62.2	(14)
Velocity				
Max. Velocity @ 1x230VAC	m/s	(in/s)	4.1	(159.9)
Max. Velocity @ 3x400VAC	m/s	(in/s)	7.1	(7.1)
Position Detection				
Repeatability	mm	(in)	±0.05	(±0.002)
Linearity	%		± 0.2	
Electrical Data				
Max. Current @ 1x230VAC	A_{pk} / A_{rms}		15.1 / 10.6	
Max. Current @ 3x400VAC	A_{pk} / A_{rms}		15.1 / 10.6	
Max. Cont. Current 1 [Passive cooling /Fan / Fluid]	A_{pk}		2.5 / 3.5 / 4.9	
Max. Cont. Current 2 [Passive cooling /Fan / Fluid]	A_{rms}		1.8 / 2.4 / 3.4	
Thermal Data				
Max. Winding Temperature (Sensor)	°C		90	
Thermal Resistance [Passive cooling / Fan / Fluid]	°K/W		1.3 / 0.65 / 0.33	
Thermal Time Constant [Passive cooling / Fan / Fluid]	s		1300 / 650 / 330	
Mechanical Data				
Slider Length	mm	(in)	1400	(55)
Slider Mass	g	(lb)	6350	(13.97)

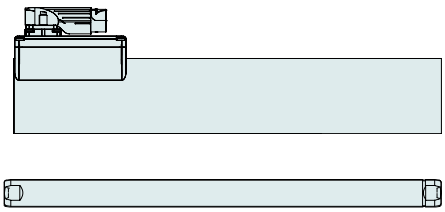

Item	Description	Item-No.
PS10-54x240U-BL-TU	Stator 3x400VAC, LinMot Encoder	0150-2724
PS10-54x240U-BL-TU-D24	Stator 3x400VAC, A/B Encoder, Pt1000	0150-2750
PS10-54x240U-BL-TU-D25	Stator 3x400VAC, A/B Encoder, PTC	0150-2754
PS10-54x240U-BL-TU-D25S	Stator 3x400VAC, A/B Encoder 5um, PTC	0150-2784
PL01-28x1400/1320	Slider 'standard'	0150-1389

P10-54x240U/1210-BL-TU

Max. Stroke: 1210 mm
Peak Force: 669 N

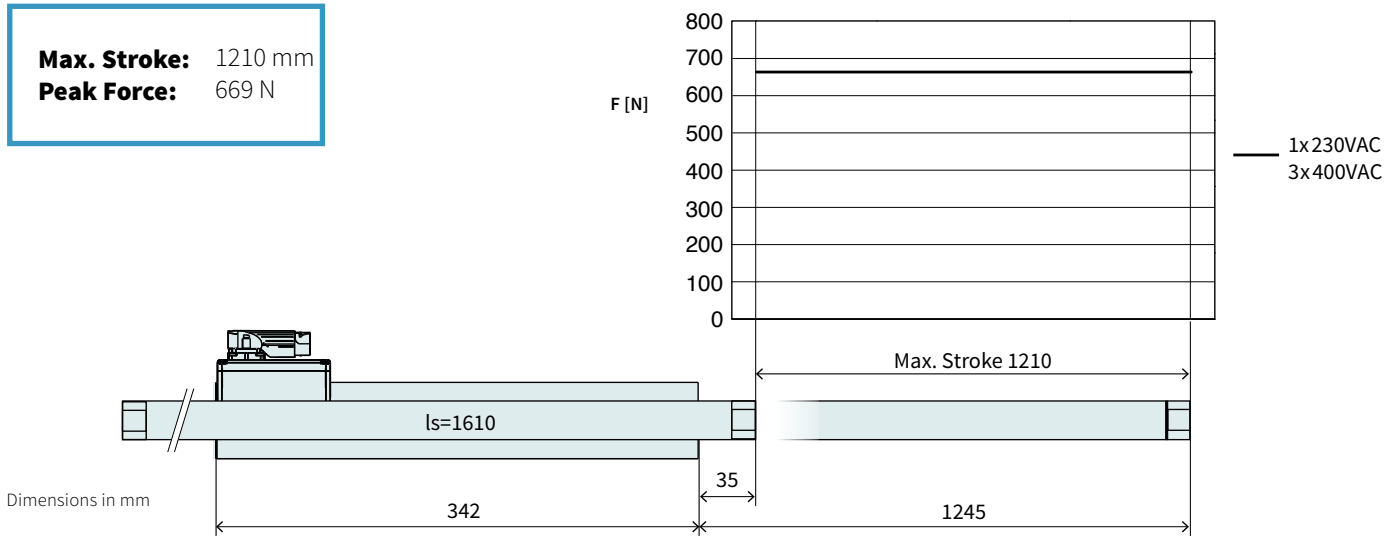

Dimensions in mm

Technical Data P10-54x240U/1210				
Stroke				
Max. Stroke	mm	(in)	1210	(47.6)
Force				
Max. Force @ 1x230VAC	N	(lbf)	669	(150)
Max. Force @ 3x400VAC	N	(lbf)	669	(150)
Max. Cont. Force [Passive cooling/ Fan / Fluid]	N	(lbf)	110 / 150 / 210	(25 / 34 / 48)
Max. Border Force relative	%		100	
Force Constant 1	N/A_{pk}	(lbf/A_{pk})	44	(9.89)
Force Constant 2	N/A_{rms}	(lbf/A_{rms})	62.2	(14)
Velocity				
Max. Velocity @ 1x230VAC	m/s	(in/s)	4.1	(159.9)
Max. Velocity @ 3x400VAC	m/s	(in/s)	7.1	(7.1)
Position Detection				
Repeatability	mm	(in)	±0.05	(±0.002)
Linearity	%		± 0.15	
Electrical Data				
Max. Current @ 1x230VAC	A_{pk} / A_{rms}		15.1 / 10.6	
Max. Current @ 3x400VAC	A_{pk} / A_{rms}		15.1 / 10.6	
Max. Cont. Current 1 [Passive cooling /Fan / Fluid]	A_{pk}		2.5 / 3.5 / 4.9	
Max. Cont. Current 2 [Passive cooling /Fan / Fluid]	A_{rms}		1.8 / 2.4 / 3.4	
Thermal Data				
Max. Winding Temperature (Sensor)	°C		90	
Thermal Resistance [Passive cooling / Fan / Fluid]	°K/W		1.3 / 0.65 / 0.33	
Thermal Time Constant [Passive cooling / Fan / Fluid]	s		1300 / 650 / 330	
Mechanical Data				
Slider Length	mm	(in)	1610	(63)
Slider Mass	g	(lb)	7330	(16.13)

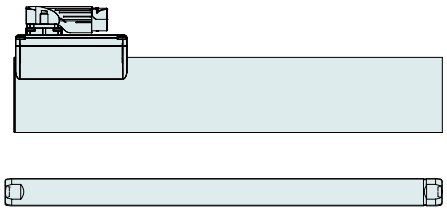

Item	Description	Item-No.
PS10-54x240U-BL-TU	Stator 3x400VAC, LinMot Encoder	0150-2724
PS10-54x240U-BL-TU-D24	Stator 3x400VAC, A/B Encoder, Pt1000	0150-2750
PS10-54x240U-BL-TU-D25	Stator 3x400VAC, A/B Encoder, PTC	0150-2754
PS10-54x240U-BL-TU-D25S	Stator 3x400VAC, A/B Encoder 5um, PTC	0150-2784
PL01-28x1610/1530	Slider 'standard'	0150-1390

P10-54x240U/1420-BL-TU

Max. Stroke: 1420 mm
Peak Force: 669 N

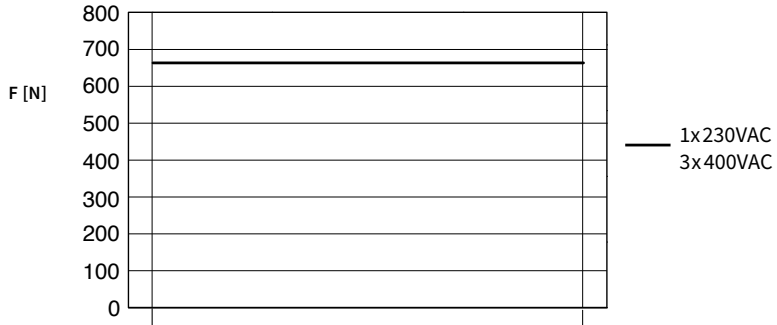

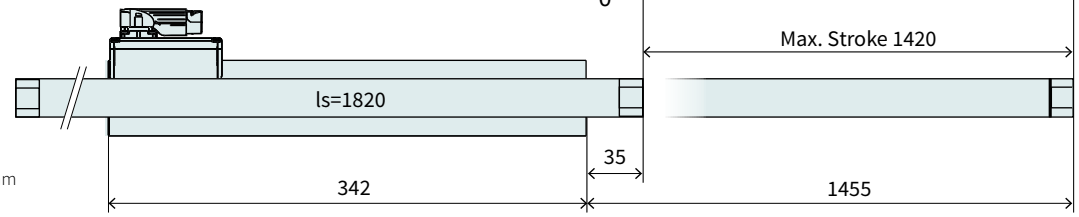

Dimensions in mm

Technical Data P10-54x240U/1420				
Stroke				
Max. Stroke	mm	(in)	1420	(55.89)
Force				
Max. Force @ 1x230VAC	N	(lbf)	669	(150)
Max. Force @ 3x400VAC	N	(lbf)	669	(150)
Max. Cont. Force [Passive cooling/ Fan / Fluid]	N	(lbf)	110 / 150 / 210	(25 / 34 / 48)
Max. Border Force relative	%		100	
Force Constant 1	N/A_{pk}	(lbf/A_{pk})	44	(9.89)
Force Constant 2	N/A_{rms}	(lbf/A_{rms})	62.2	(14)
Velocity				
Max. Velocity @ 1x230VAC	m/s	(in/s)	4.1	(159.9)
Max. Velocity @ 3x400VAC	m/s	(in/s)	7.1	(7.1)
Position Detection				
Repeatability	mm	(in)	±0.05	(±0.002)
Linearity	%		± 0.15	
Electrical Data				
Max. Current @ 1x230VAC	A_{pk} / A_{rms}		15.1 / 10.6	
Max. Current @ 3x400VAC	A_{pk} / A_{rms}		15.1 / 10.6	
Max. Cont. Current 1 [Passive cooling /Fan / Fluid]	A_{pk}		2.5 / 3.5 / 4.9	
Max. Cont. Current 2 [Passive cooling /Fan / Fluid]	A_{rms}		1.8 / 2.4 / 3.4	
Thermal Data				
Max. Winding Temperature (Sensor)	°C		90	
Thermal Resistance [Passive cooling / Fan / Fluid]	°K/W		1.3 / 0.65 / 0.33	
Thermal Time Constant [Passive cooling / Fan / Fluid]	s		1300 / 650 / 330	
Mechanical Data				
Slider Length	mm	(in)	1820	(72)
Slider Mass	g	(lb)	8300	(18.26)

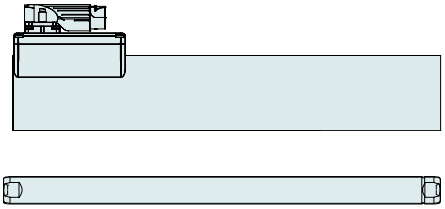

Item	Description	Item-No.
PS10-54x240U-BL-TU	Stator 3x400VAC, LinMot Encoder	0150-2724
PS10-54x240U-BL-TU-D24	Stator 3x400VAC, A/B Encoder, Pt1000	0150-2750
PS10-54x240U-BL-TU-D25	Stator 3x400VAC, A/B Encoder, PTC	0150-2754
PS10-54x240U-BL-TU-D25S	Stator 3x400VAC, A/B Encoder 5um, PTC	0150-2784
PL01-28x1820/1740	Slider 'standard'	0150-1395

P10-54x240U/1600-BL-TU

Max. Stroke: 1600 mm
Peak Force: 669 N

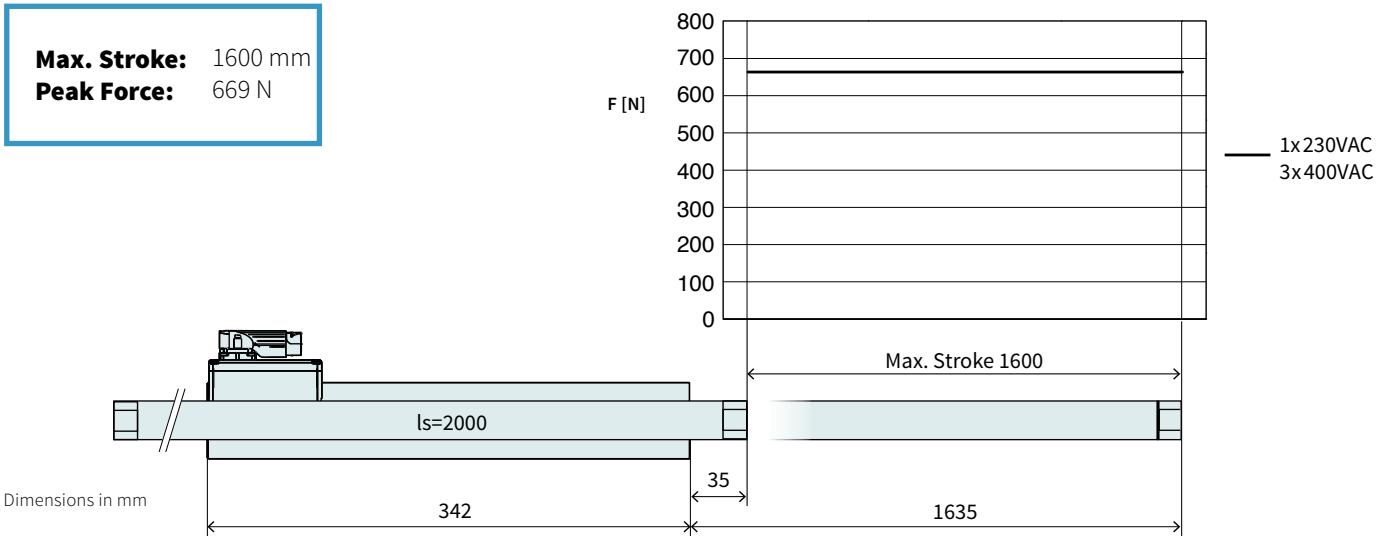

Technical Data P10-54x240U/1600				
Stroke				
Max. Stroke	mm	(in)	1600	(62.99)
Force				
Max. Force @ 1x230VAC	N	(lbf)	669	(150)
Max. Force @ 3x400VAC	N	(lbf)	669	(150)
Max. Cont. Force [Passive cooling/ Fan / Fluid]	N	(lbf)	110 / 150 / 210	(25 / 34 / 48)
Max. Border Force relative	%		100	
Force Constant 1	N/A_{pk}	(lbf/A_{pk})	44	(9.89)
Force Constant 2	N/A_{rms}	(lbf/A_{rms})	62.2	(14)
Velocity				
Max. Velocity @ 1x230VAC	m/s	(in/s)	4.1	(159.9)
Max. Velocity @ 3x400VAC	m/s	(in/s)	7.1	(7.1)
Position Detection				
Repeatability	mm	(in)	±0.05	(±0.002)
Linearity	%		± 0.15	
Electrical Data				
Max. Current @ 1x230VAC	A_{pk} / A_{rms}		15.1 / 10.6	
Max. Current @ 3x400VAC	A_{pk} / A_{rms}		15.1 / 10.6	
Max. Cont. Current 1 [Passive cooling /Fan / Fluid]	A_{pk}		2.5 / 3.5 / 4.9	
Max. Cont. Current 2 [Passive cooling /Fan / Fluid]	A_{rms}		1.8 / 2.4 / 3.4	
Thermal Data				
Max. Winding Temperature (Sensor)	°C		90	
Thermal Resistance [Passive cooling / Fan / Fluid]	°K/W		1.3 / 0.65 / 0.33	
Thermal Time Constant [Passive cooling / Fan / Fluid]	s		1300 / 650 / 330	
Mechanical Data				
Slider Length	mm	(in)	2000	(79)
Slider Mass	g	(lb)	9140	(20.11)

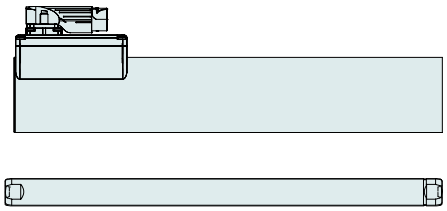

Item	Description	Item-No.
PS10-54x240U-BL-TU	Stator 3x400VAC, LinMot Encoder	0150-2724
PS10-54x240U-BL-TU-D24	Stator 3x400VAC, A/B Encoder, Pt1000	0150-2750
PS10-54x240U-BL-TU-D25	Stator 3x400VAC, A/B Encoder, PTC	0150-2754
PS10-54x240U-BL-TU-D25S	Stator 3x400VAC, A/B Encoder 5um, PTC	0150-2784
PL01-28x2000/1920	Slider 'standard'	0150-1396

Motor Cable

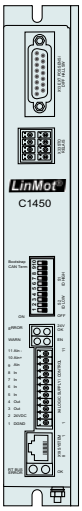

C1400

B Connector MC10-B/m

Tk Connector MC10-Tk/f

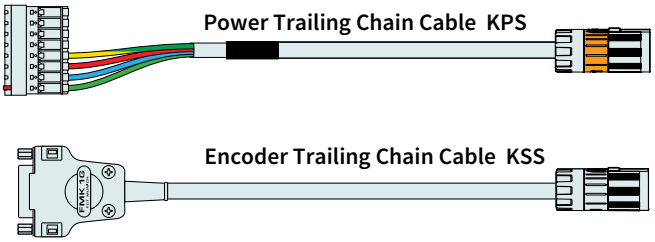



P10-54x240U

D15s Connector MC01-D15s-45°/f

Uk Connector MC10-Uk/f



E1400

L Connector MC10-L/m

Tk Connector MC10-Tk/f

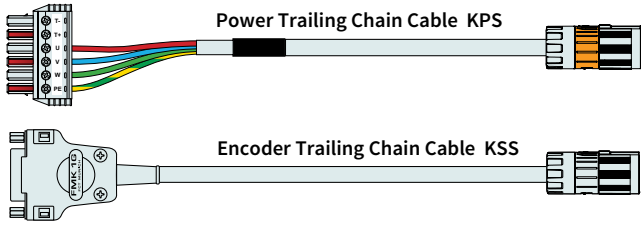



P10-54x240U

D15s Connector MC01-D15s-45°/f

Uk Connector MC10-Uk/f

ORDERING INFORMATION

TRAILING CHAIN CABLE FOR LINMOT DRIVES		
Item	**Description**	**Item-No.**
KPS07-04/02-L/Tk-3	Power Trailing Chain Cable E1400/P10-54, 3 m	0150-2670
KPS07-04/02-L/Tk-5	Power Trailing Chain Cable E1400/P10-54, 5 m	0150-2671
KPS07-04/02-L/Tk-8	Power Trailing Chain Cable E1400/P10-54, 8 m	0150-2672
KPS07-04/02-L/Tk-12	Power Trailing Chain Cable E1400/P10-54, 12 m	0150-2673
KPS07-04/02-B/Tk-3	Power Trailing Chain Cable C1400/P10-54, 3 m	0150-3648
KPS07-04/02-B/Tk-5	Power Trailing Chain Cable C1400/P10-54, 5 m	0150-3657
KPS07-04/02-B/Tk-8	Power Trailing Chain Cable C1400/P10-54, 8 m	0150-3658
KPS07-04/02-B/Tk-12	Power Trailing Chain Cable C1400/P10-54, 12 m	0150-3659
KSS 05-02/08-D15s/Uk-3	Encoder Trailing Chain Cable D15s/Uk, 3 m	0150-2650
KSS 05-02/08-D15s/Uk-5	Encoder Trailing Chain Cable D15s/Uk, 5 m	0150-2651
KSS 05-02/08-D15s/Uk-8	Encoder Trailing Chain Cable D15s/Uk, 8 m	0150-2652
KSS 05-02/08-D15s/Uk-12	Encoder Trailing Chain Cable D15s/Uk, 12 m	0150-2653

TRAILING CHAIN CABLES FOR THIRD PARTY DRIVES		
Item	**Description**	**Item-No.**
KPS07-04/02-./Tk-10	Power Trailing Chain Cable .../Tk, 10 m	0150-3626
KPS07-04/02-./Tk-	Power Trailing Chain Cable .../Tk, Custom length	0150-3622
KSS 05-02/13-./Uk-10	Encoder Trailing Chain Cable ./Uk, 10 m	0150-3627
KSS 05-02/13-./Uk-	Encoder Trailing Chain Cable ./Uk, Custom length	0150-3619

CONNECTOR & CABLE (INDIVIDUAL)		
Item	**Description**	**Item-No.**
MC10-L/m	Connector Power E1400/X2	0150-3382
MC01-D15/f	Motor Connector D15 (f)	0150-3136
MC10-Tk/f	Connector Power PS10-54	0150-3482
MC10-Uk/f	Connector Encoder PS10-54	0150-3483
KPS07-04/02	Power Trailing Chain Cable P10-54 (per m)	0150-2372
KSS05-02/08	Trailing Chain Cable Encoder LinMot (per m)	0150-2258
KSS05-02/13	Trailing Chain Cable Encoder P10-...-Dxx (per m)	0150-2259

MOTOR FLANGES



Item	Description	Item-No.
PF10-54x260	Flange for PS10-54x240	0150-2735

FIND MORE PRODUCT DETAILS IN THE CHAPTER "ACCESSORIES".

FANS



Item	Description	Item-No.
HV01-37/48	Fan cooling for H01-37/48 &PF02-37/48	0150-5051

FIND MORE PRODUCT DETAILS IN THE CHAPTER "ACCESSORIES".

SLIDER MOUNTING



Item	Description	Item-No.
PLF01-28	Fixed Bearing Set for 27/28 mm sliders	0150-3087
PLF01-28-SS	Fixed Bearing Set for 27/28 mm sliders, stainless steel	0150-3297
PLL01-28	Floating Bearing for 28 mm sliders	0150-3094
PLM01-28-MK	Mounting Kit for 28 mm sliders	0150-3095

FIND MORE PRODUCT DETAILS IN THE CHAPTER "ACCESSORIES".

BEARING KIT

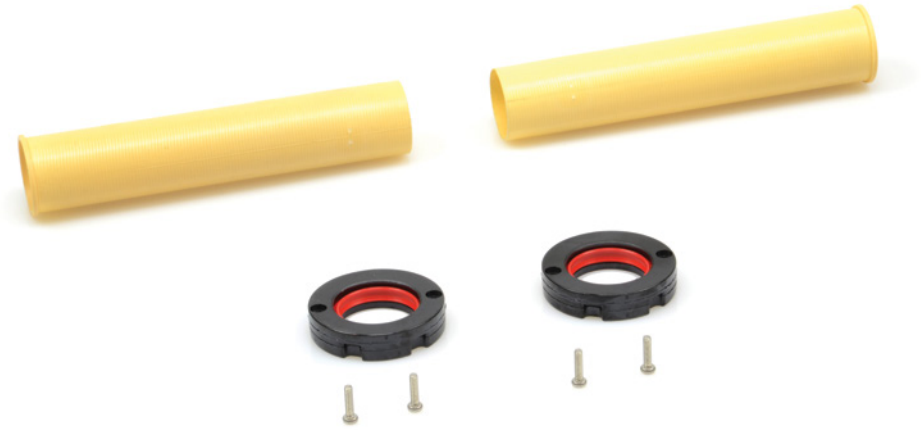

Item	Description	Item-No.
PB10-54x240-L	Bearing Kit for PS10-54x240	0150-3673

FIND MORE PRODUCT DETAILS IN THE CHAPTER "ACCESSORIES".

EXTERNAL POSITION SENSORS



Item	Description	Item-No.
MS01-1/D	Linear Encoder 1µm, A/B (for incremental strip)	0150-1840
MB01-1000	Magnetic incremental strip for MS01-1/D, per cm	0150-1963
KS025-D15/D-Encoder	Encoder Cable (Length in m)	0150-3168

FIND MORE PRODUCT DETAILS IN THE CHAPTER "ACCESSORIES".



Item	Description	Item-No.
MS01-1/D-SSI	Linear Encoder 1µm, A/B (for absolute strip)	0150-2095
MB01-1000-ABS	Magnetic absolute strip for MS01-1/D-SSI (per cm)	0150-2096
EC01-ABS/ENC-12-S	MS01-1/D-SSI Encoder connector straight	0150-3616
KSS01-12-D15/ABS-ENC	Special cable for MS01-1/D-SSI on C1100/C1200/C1400/E1200/E1400 Drives	0150-3652

FIND MORE PRODUCT DETAILS IN THE CHAPTER "ACCESSORIES".

LINEAR MOTORS P10-54x300U



- 230VAC and 3 x 400VAC technology
- Peak forces up to 871 N
- LinMot Encoder or Incremental Encoder
- Extremely high dynamic
- Rotating push-pull TWIN connector for power and encoder cables
- Can also be controlled by standard third-party servo drives

4

LINEAR MOTORS P10-54x300U

Technical Data **469**

Motor Specifications

P10-54x300U/40 ..... **474**
P10-54x300U/160 ..... **475**
P10-54x300U/250 ..... **476**
P10-54x300U/340 ..... **477**
P10-54x300U/460 ..... **478**
P10-54x300U/550 ..... **479**
P10-54x300U/760 ..... **480**
P10-54x300U/940 ..... **481**
P10-54x300U/1150 ..... **482**
P10-54x300U/1360 ..... **483**
P10-54x300U/1540 ..... **484**

Accessories **485**



MOTOR FAMILY P10-54x300U

Technical Data				
Stroke				
Max. Stroke (ES)	mm	(in)	1540	(60.6)
Force				
Max. Force @ 1x230VAC	N	(lbf)	871	(196)
Max. Force @ 3x400VAC	N	(lbf)	871	(196)
Max. Cont. Force [Passive cooling/ Fan / Fluid]	N	(lbf)	140 / 190 / 270	(31 / 44 / 61)
Max. Border Force relative	%		100	
Force Constant 1	N/A_{pk}	(lbf/A_{pk})	44	(9.89)
Force Constant 2	N/A_{rms}	(lbf/A_{rms})	62.2	(14)
Velocity				
Max. Velocity @ 1x230VAC	m/s	(in/s)	4.1	(159.9)
Max. Velocity @ 3x400VAC	m/s	(in/s)	7.1	(279.9)
Position Detection				
Position Resolution	mm	(in)	0.007	(0.0003)
Repeatability	mm	(in)	±0.05	(±0.002)
Position Resolution with ES	mm	(in)	0.001	(0.00004)
Repeatability with ES	mm	(in)	±0.01	(±0.0004)
Linearity with ES	mm	(in)	±0.01	(±0.0004)
Electrical Data				
Max. Current @ 1x230VAC	A_{pk} / A_{rms}		19.7 / 13.9	
Max. Current @ 3x400VAC	A_{pk} / A_{rms}		19.7 / 13.9	
Max. Cont. Current 1 [Passive cooling /Fan / Fluid]	A_{pk}		3.1 / 4.4 / 6.2	
Max. Cont. Current 2 [Passive cooling /Fan / Fluid]	A_{rms}		2.2 / 3.1 / 4.4	
Back EMF Constant	V_{pk} / (m/s)	(V_{pk} / (in/s))	50.8	(1.29)
Terminal Resistance 25 °C / 120 °C	Ohm		5.7 / 7.8	
Terminal Inductivity	mH		4.8	
Magnetic Period	mm	(in)	60	(2.35)
Thermal Data				
Max. Winding Temperature (Sensor)	°C		90	
Thermal Resistance [Passive cooling / Fan / Fluid]	°K/W		1.1 / 0.53 / 0.27	
Thermal Time Constant [Passive cooling / Fan / Fluid]	s		1400 / 660 / 340	
Mechanical Data				
Stator Diameter	mm	(in)	54	(2.1)
Stator Length	mm	(in)	402	(16)
Stator Mass	g	(lb)	3200	(7.04)
Slider Diameter	mm	(in)	28	(1.1)
Slider Length	mm	(in)	500 - 2000	(20 - 79)
Slider Mass	g	(lb)	2160 - 9140	(4.75 - 20.11)
IP Code			IP 65	

STATOR

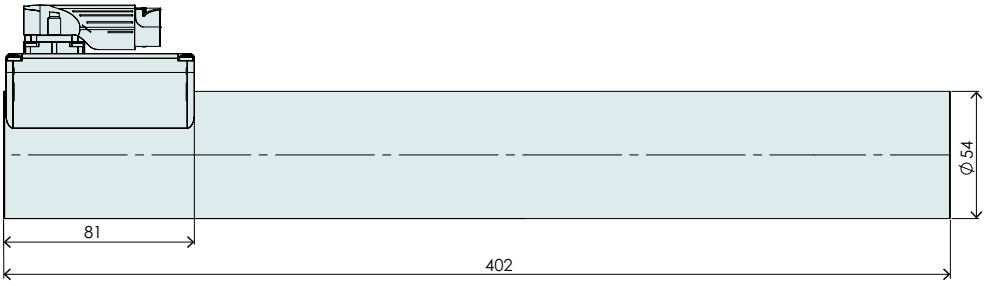

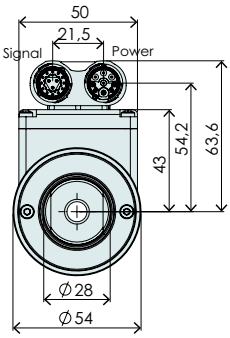

Item	Description	Item-No.
PS10-54x300U-BL-TU	Stator 3x400VAC, LinMot Encoder	0150-2725
PS10-54x300U-BL-TU-D24	Stator 3x400VAC, A/B Encoder, Pt1000	0150-2751
PS10-54x300U-BL-TU-D25	Stator 3x400VAC, A/B Encoder, PTC	0150-2755
PS10-54x300U-BL-TU-D25S	Stator 3x400VAC, A/B Encoder 5um, PTC	0150-2785

CONNECTOR PS10-54x240U-BL-TU

Motor Connector Wiring		Connector Encoder Uk	Wire Color Motor Cable
+Vcc	Supply	1	red
GND	Supply	2	black
Sin+	Encoder	3	yellow
Sin-	Encoder	4	orange
Cos+	Encoder	5	green
Cos-	Encoder	6	blue
Mot. Link C+	Communication	7	pink
Mot. Link C-	Communication	8	grey
n. c.	n. c.	9	n. c.
n. c.	n. c.	10	n. c.
n. c.	n. c.	11	n. c.
n. c.	n. c.	12	n. c.
n. c.	n. c.	A	n. c.
n. c.	n. c.	B	n. c.
n. c.	n. c.	C	n. c.

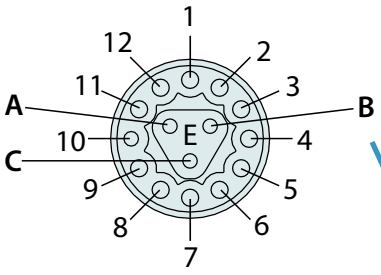

Connector Encoder Uk

View: Motor connector, plug side

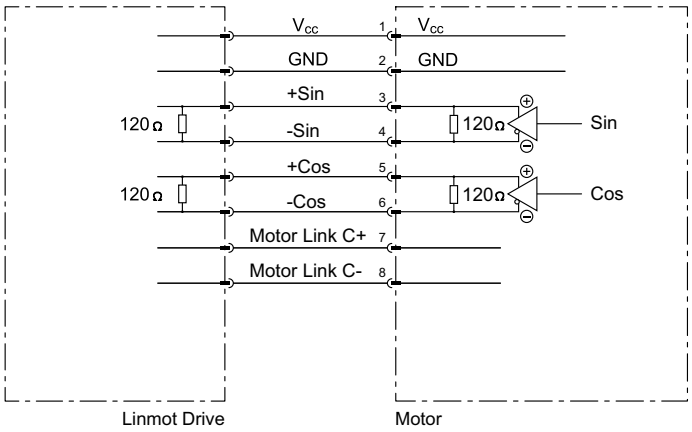

Motor Steckerbelegung	Connector Power Tk	Wire Color Motor Cable
Phase U	A	red
PE	PE	yellow-green
Phase V	B	blue
Phase W	C	green
n. c.	1	n. c.
n. c.	2	n. c.
n. c.	3	n. c.
n. c.	4	n. c.
n. c.	5	n. c.

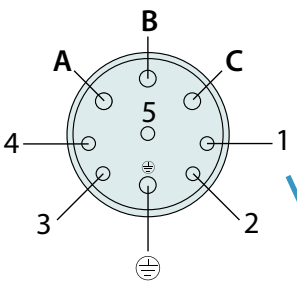

Connector Power Tk

View: Motor connector, plug side

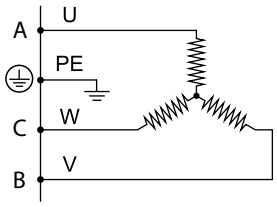

CONNECTOR PS10-54X300U-BL-TU-D24 / 25 / 25S

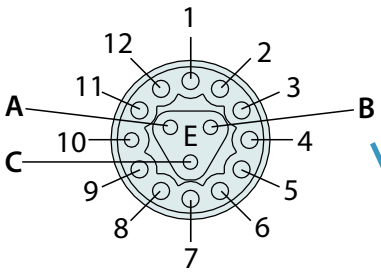

Connector Encoder Uk

View: Motor connector, plug side

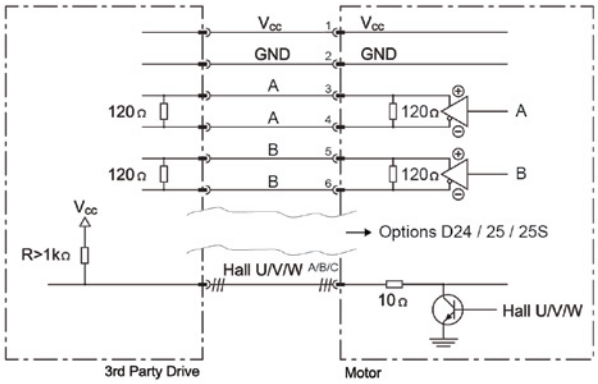

PS10-54x300U-BL-TU-D24

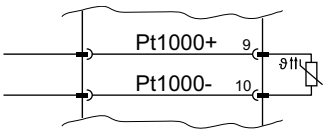

Pt1000 Characteristic emulated

PS10-54x300U-BL-TU-D25
PS10-54x300U-BL-TU-D25S

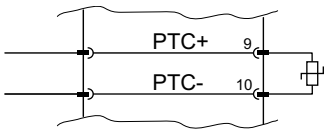

PTC (switching type)
350 Ω / 18 kΩ emulated[1]

Motor Connector Wiring				
PS10-54x300U-BL-TU-D24	PS10-54x300U-BL-TU-D25 PS10-54x300U-BL-TU-D25S	Function	Connector Encoder Uk	Wire Color Motor Cable
+Vcc	+Vcc	Supply	1	white
GND	GND	Supply	2	brown
A	A	Encoder	3	grey
/ A	/ A	Encoder	4	pink
B	B	Encoder	5	blue
/ B	/ B	Encoder	6	red
–	–	–	7	green (do not connect)
–	–	–	8	yellow (do not connect)
Pt1000+	PTC+	Temp.[2]	9	yellow-brown
Pt1000-	PTC-	Temp.[2]	10	white-yellow
REF+	REF+	Encoder	11	black
REF-	REF-	Encoder	12	purple
Hall U	Hall U	Encoder	A	grey-red
Hall V	Hall V	Encoder	B	red-blue
Hall W	Hall W	Encoder	C	white-green

1) under 350 Ω = no fault, over 18 kΩ = Fault
2) The temperature evaluation circiut must be powered from the encoder supply and must be at the same potential.
The grounds of the temperature evaluation circuit and the encoder have to be connected. The encoder must have been powered on for at least 50 ms, before valid temperatures can be measured. If the encoder is powered off, 20k Ohms are measured between Pins 9 and 10.

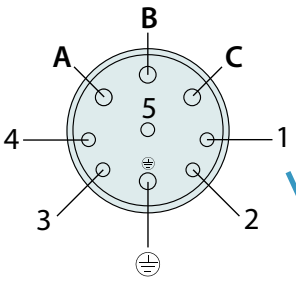

Connector Power Tk

View: Motor connector, plug side

PS10-54x300U-BL-TU-D24

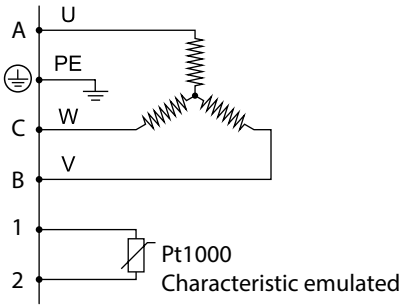

PS10-54x300U-BL-TU-D25
PS10-54x300U-BL-TU-D25S

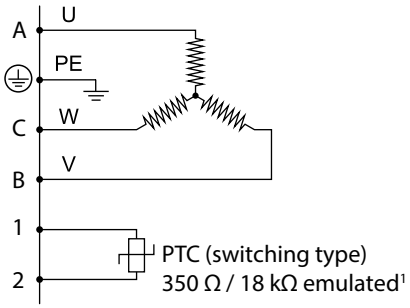

Motor Connector Wiring			
PS10-54x300U-BL-TU-D24	PS10-54x300U-BL-TU-D25 PS10-54x300U-BL-TU-D25S	Connector Power Tk	Wire Color Motor Cable
Phase U	Phase U	A	red
PE	PE	PE	yellow-green
Phase V	Phase V	B	blue
Phase W	Phase W	C	green
Pt1000+	PTC+	1	turquoise
Pt1000-	PTC-	2	grey
n. c.	n. c.	3	n. c.
n. c.	n. c.	4	n. c.
n. c.	n. c.	5	n. c.

1) under 350 Ω = no fault, over 18 Ω = Fault

SLIDER

Slider Standard

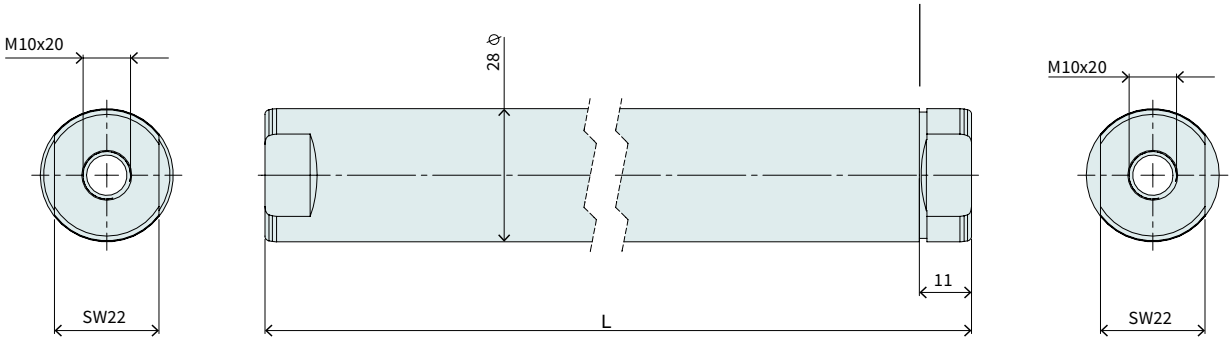

Slider Standard			
Item	**Description**	**Max. Stroke [mm]**	**Item-No.**
PL01-28x500/420	Slider 'standard'	40	0150-1382
PL01-28x620/540	Slider 'standard'	160	0150-1383
PL01-28x710/630	Slider 'standard'	250	0150-1384
PL01-28x800/720	Slider 'standard'	340	0150-1385
PL01-28x920/840	Slider 'standard'	460	0150-1386
PL01-28x1010/930	Slider 'standard'	550	0150-1387
PL01-28x1220/1140	Slider 'standard'	760	0150-1388
PL01-28x1400/1320	Slider 'standard'	940	0150-1389
PL01-28x1610/1530	Slider 'standard'	1150	0150-1390
PL01-28x1820/1740	Slider 'standard'	1360	0150-1395
PL01-28x2000/1920	Slider 'standard'	1540	0150-1396

P10-54x300U/40-BL-TU

Max. Stroke: 40 mm
Peak Force: 871 N

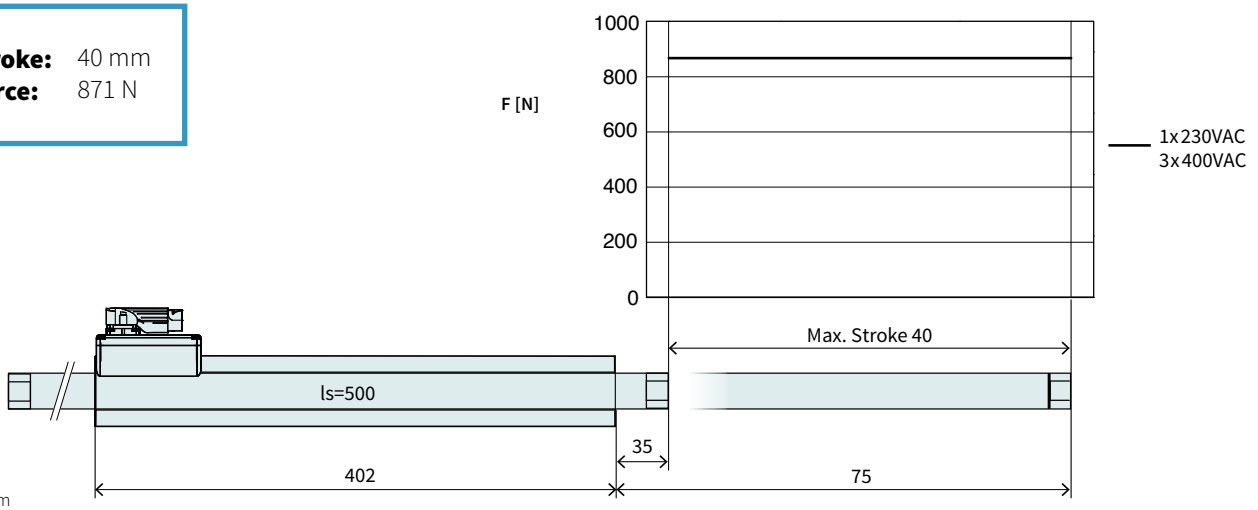

Dimensions in mm

Technical Data P10-54x300U/40				
Stroke				
Max. Stroke	mm	(in)	40	(1.57)
Force				
Max. Force @ 1x230VAC	N	(lbf)	871	(196)
Max. Force @ 3x400VAC	N	(lbf)	871	(196)
Max. Cont. Force [Passive cooling/ Fan / Fluid]	N	(lbf)	140 / 190 / 270	(31 / 44 / 61)
Max. Border Force relative	%		100	
Force Constant 1	N/A_{pk}	(lbf/A_{pk})	44	(9.89)
Force Constant 2	N/A_{rms}	(lbf/A_{rms})	62.2	(14)
Velocity				
Max. Velocity @ 1x230VAC	m/s	(in/s)	4.1	(159.9)
Max. Velocity @ 3x400VAC	m/s	(in/s)	7.1	(7.1)
Position Detection				
Repeatability	mm	(in)	±0.05	(±0.002)
Linearity	%		± 2	
Electrical Data				
Max. Current @ 1x230VAC	A_{pk} / A_{rms}		19.7 / 13.9	
Max. Current @ 3x400VAC	A_{pk} / A_{rms}		19.7 / 13.9	
Max. Cont. Current 1 [Passive cooling /Fan / Fluid]	A_{pk}		3.1 / 4.4 / 6.2	
Max. Cont. Current 2 [Passive cooling /Fan / Fluid]	A_{rms}		2.2 / 3.1 / 4.4	
Thermal Data				
Max. Winding Temperature (Sensor)	°C		90	
Thermal Resistance [Passive cooling / Fan / Fluid]	°K/W		1.1 / 0.53 / 0.27	
Thermal Time Constant [Passive cooling / Fan / Fluid]	s		1400 / 660 / 340	
Mechanical Data				
Slider Length	mm	(in)	500	(20)
Slider Mass	g	(lb)	2160	(4.75)

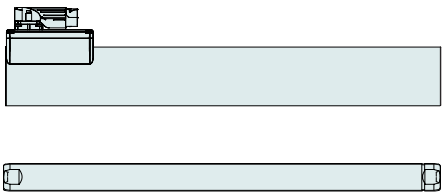

Item	Description	Item-No.
PS10-54x300U-BL-TU	Stator 3x400VAC, LinMot Encoder	0150-2725
PS10-54x300U-BL-TU-D24	Stator 3x400VAC, A/B Encoder, Pt1000	0150-2751
PS10-54x300U-BL-TU-D25	Stator 3x400VAC, A/B Encoder, PTC	0150-2755
PS10-54x300U-BL-TU-D25S	Stator 3x400VAC, A/B Encoder 5um, PTC	0150-2785
PL01-28x500/420	Slider 'standard'	0150-1382

P10-54x300U/160-BL-TU

Max. Stroke: 160 mm
Peak Force: 871 N

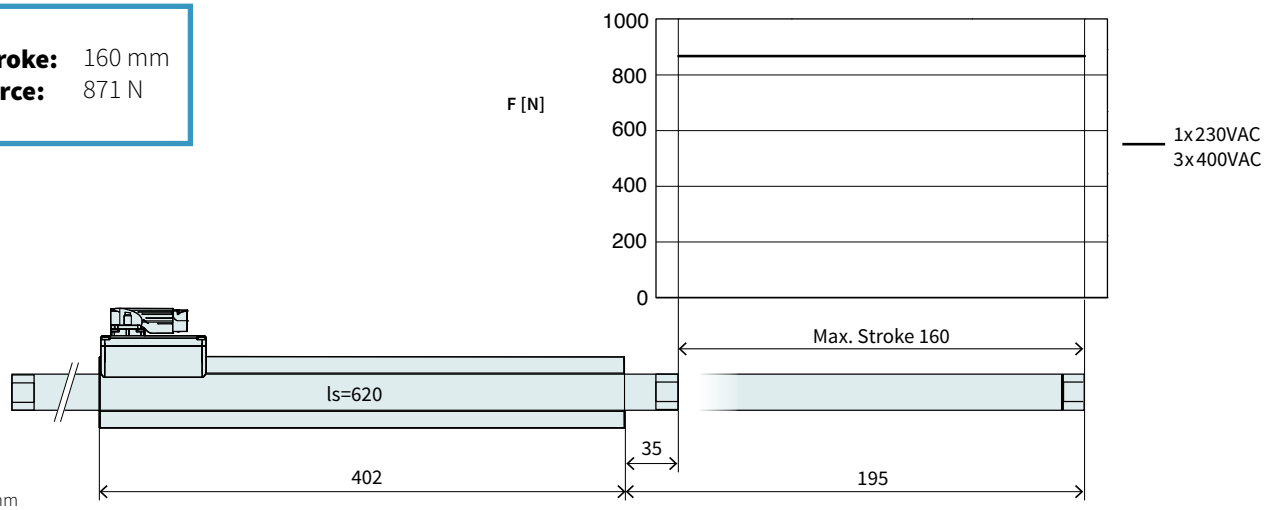

Dimensions in mm

Technical Data P10-54x300U/160				
Stroke				
Max. Stroke	mm	(in)	160	(6.29)
Force				
Max. Force @ 1x230VAC	N	(lbf)	871	(196)
Max. Force @ 3x400VAC	N	(lbf)	871	(196)
Max. Cont. Force [Passive cooling/ Fan / Fluid]	N	(lbf)	140 / 190 / 270	(31 / 44 / 61)
Max. Border Force relative	%		100	
Force Constant 1	N/A_{pk}	(lbf/A_{pk})	44	(9.89)
Force Constant 2	N/A_{rms}	(lbf/A_{rms})	62.2	(14)
Velocity				
Max. Velocity @ 1x230VAC	m/s	(in/s)	4.1	(159.9)
Max. Velocity @ 3x400VAC	m/s	(in/s)	7.1	(7.1)
Position Detection				
Repeatability	mm	(in)	±0.05	(±0.002)
Linearity	%		± 0.55	
Electrical Data				
Max. Current @ 1x230VAC	A_{pk} / A_{rms}		19.7 / 13.9	
Max. Current @ 3x400VAC	A_{pk} / A_{rms}		19.7 / 13.9	
Max. Cont. Current 1 [Passive cooling /Fan / Fluid]	A_{pk}		3.1 / 4.4 / 6.2	
Max. Cont. Current 2 [Passive cooling /Fan / Fluid]	A_{rms}		2.2 / 3.1 / 4.4	
Thermal Data				
Max. Winding Temperature (Sensor)	°C		90	
Thermal Resistance [Passive cooling / Fan / Fluid]	°K/W		1.1 / 0.53 / 0.27	
Thermal Time Constant [Passive cooling / Fan / Fluid]	s		1400 / 660 / 340	
Mechanical Data				
Slider Length	mm	(in)	620	(24)
Slider Mass	g	(lb)	2720	(5.98)

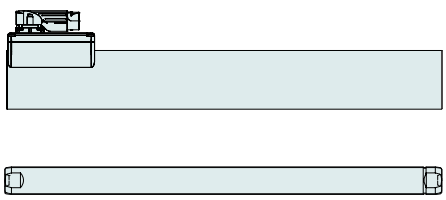

Item	Description	Item-No.
PS10-54x300U-BL-TU	Stator 3x400VAC, LinMot Encoder	0150-2725
PS10-54x300U-BL-TU-D24	Stator 3x400VAC, A/B Encoder, Pt1000	0150-2751
PS10-54x300U-BL-TU-D25	Stator 3x400VAC, A/B Encoder, PTC	0150-2755
PS10-54x300U-BL-TU-D25S	Stator 3x400VAC, A/B Encoder 5um, PTC	0150-2785
PL01-28x620/540	Slider 'standard'	0150-1383

P10-54x300U/250-BL-TU

Max. Stroke: 250 mm
Peak Force: 871 N

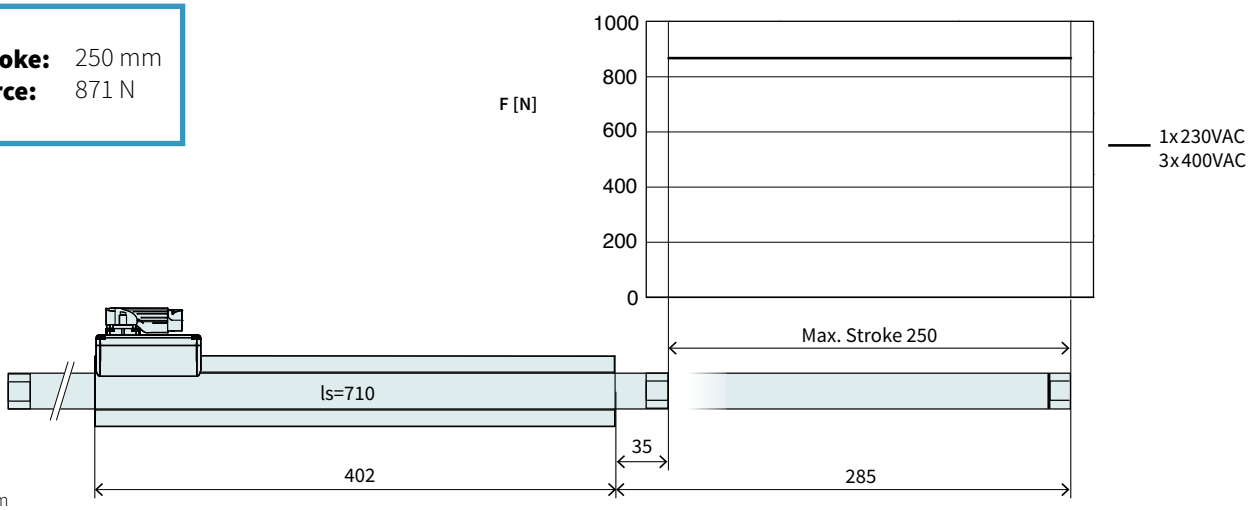

Dimensions in mm

Technical Data P10-54x300U/250				
Stroke				
Max. Stroke	mm	(in)	250	(9.83)
Force				
Max. Force @ 1x230VAC	N	(lbf)	871	(196)
Max. Force @ 3x400VAC	N	(lbf)	871	(196)
Max. Cont. Force [Passive cooling/ Fan / Fluid]	N	(lbf)	140 / 190 / 270	(31 / 44 / 61)
Max. Border Force relative	%		100	
Force Constant 1	N/A_{pk}	(lbf/A_{pk})	44	(9.89)
Force Constant 2	N/A_{rms}	(lbf/A_{rms})	62.2	(14)
Velocity				
Max. Velocity @ 1x230VAC	m/s	(in/s)	4.1	(159.9)
Max. Velocity @ 3x400VAC	m/s	(in/s)	7.1	(7.1)
Position Detection				
Repeatability	mm	(in)	±0.05	(±0.002)
Linearity	%		± 0.4	
Electrical Data				
Max. Current @ 1x230VAC	A_{pk} / A_{rms}		19.7 / 13.9	
Max. Current @ 3x400VAC	A_{pk} / A_{rms}		19.7 / 13.9	
Max. Cont. Current 1 [Passive cooling /Fan / Fluid]	A_{pk}		3.1 / 4.4 / 6.2	
Max. Cont. Current 2 [Passive cooling /Fan / Fluid]	A_{rms}		2.2 / 3.1 / 4.4	
Thermal Data				
Max. Winding Temperature (Sensor)	°C		90	
Thermal Resistance [Passive cooling / Fan / Fluid]	°K/W		1.1 / 0.53 / 0.27	
Thermal Time Constant [Passive cooling / Fan / Fluid]	s		1400 / 660 / 340	
Mechanical Data				
Slider Length	mm	(in)	710	(28)
Slider Mass	g	(lb)	3140	(6.91)

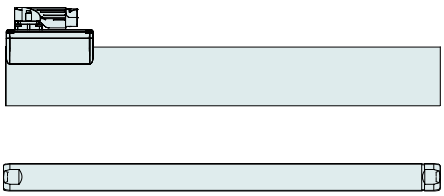

Item	Description	Item-No.
PS10-54x300U-BL-TU	Stator 3x400VAC, LinMot Encoder	0150-2725
PS10-54x300U-BL-TU-D24	Stator 3x400VAC, A/B Encoder, Pt1000	0150-2751
PS10-54x300U-BL-TU-D25	Stator 3x400VAC, A/B Encoder, PTC	0150-2755
PS10-54x300U-BL-TU-D25S	Stator 3x400VAC, A/B Encoder 5um, PTC	0150-2785
PL01-28x710/630	Slider 'standard'	0150-1384

P10-54x300U/340-BL-TU

Max. Stroke: 340 mm
Peak Force: 871 N

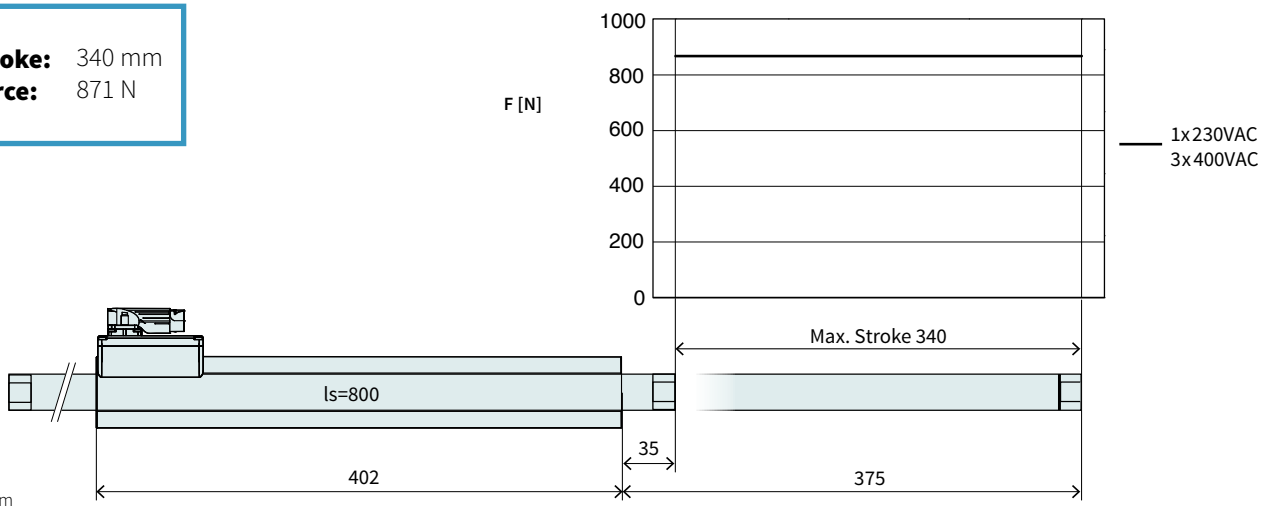

Dimensions in mm

Technical Data P10-54x300U/340				
Stroke				
Max. Stroke	mm	(in)	340	(13.4)
Force				
Max. Force @ 1x230VAC	N	(lbf)	871	(196)
Max. Force @ 3x400VAC	N	(lbf)	871	(196)
Max. Cont. Force [Passive cooling/ Fan / Fluid]	N	(lbf)	140 / 190 / 270	(31 / 44 / 61)
Max. Border Force relative	%		100	
Force Constant 1	N/A_{pk}	(lbf/A_{pk})	44	(9.89)
Force Constant 2	N/A_{rms}	(lbf/A_{rms})	62.2	(14)
Velocity				
Max. Velocity @ 1x230VAC	m/s	(in/s)	4.1	(159.9)
Max. Velocity @ 3x400VAC	m/s	(in/s)	7.1	(7.1)
Position Detection				
Repeatability	mm	(in)	±0.05	(±0.002)
Linearity	%		± 0.3	
Electrical Data				
Max. Current @ 1x230VAC	A_{pk} / A_{rms}		19.7 / 13.9	
Max. Current @ 3x400VAC	A_{pk} / A_{rms}		19.7 / 13.9	
Max. Cont. Current 1 [Passive cooling /Fan / Fluid]	A_{pk}		3.1 / 4.4 / 6.2	
Max. Cont. Current 2 [Passive cooling /Fan / Fluid]	A_{rms}		2.2 / 3.1 / 4.4	
Thermal Data				
Max. Winding Temperature (Sensor)	°C		90	
Thermal Resistance [Passive cooling / Fan / Fluid]	°K/W		1.1 / 0.53 / 0.27	
Thermal Time Constant [Passive cooling / Fan / Fluid]	s		1400 / 660 / 340	
Mechanical Data				
Slider Length	mm	(in)	800	(31)
Slider Mass	g	(lb)	3560	(7.83)

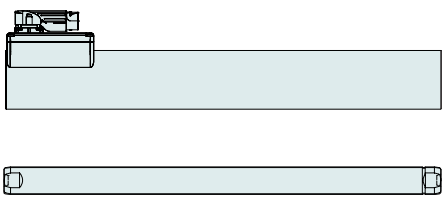

Item	Description	Item-No.
PS10-54x300U-BL-TU	Stator 3x400VAC, LinMot Encoder	0150-2725
PS10-54x300U-BL-TU-D24	Stator 3x400VAC, A/B Encoder, Pt1000	0150-2751
PS10-54x300U-BL-TU-D25	Stator 3x400VAC, A/B Encoder, PTC	0150-2755
PS10-54x300U-BL-TU-D25S	Stator 3x400VAC, A/B Encoder 5um, PTC	0150-2785
PL01-28x800/720	Slider 'standard'	0150-1385

P10-54x300U/460-BL-TU

4

Max. Stroke: 460 mm
Peak Force: 871 N

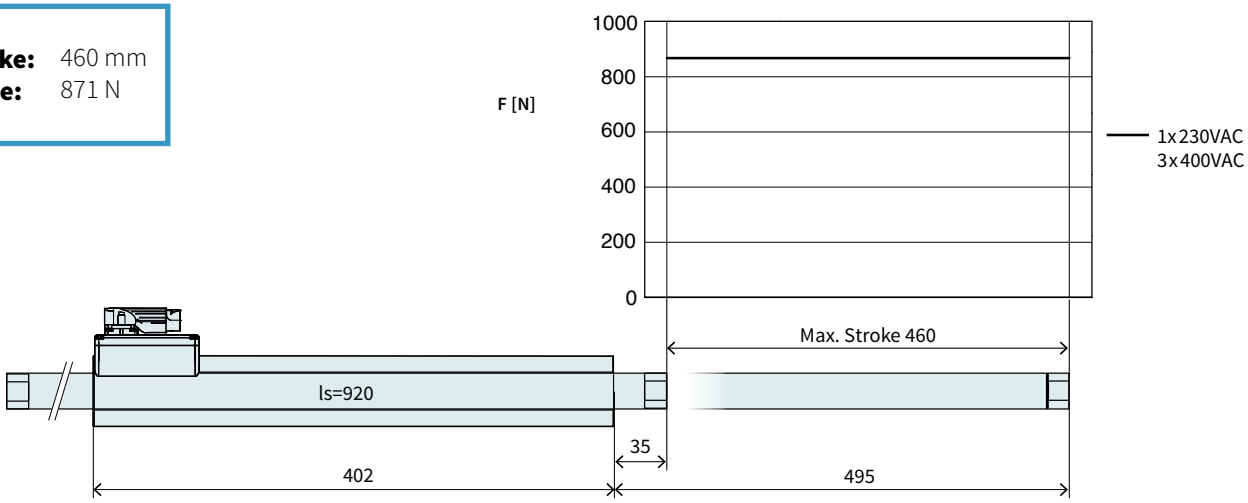

Dimensions in mm

Technical Data P10-54x300U/460				
Stroke				
Max. Stroke	mm	(in)	460	(18.1)
Force				
Max. Force @ 1x230VAC	N	(lbf)	871	(196)
Max. Force @ 3x400VAC	N	(lbf)	871	(196)
Max. Cont. Force [Passive cooling/ Fan / Fluid]	N	(lbf)	140 / 190 / 270	(31 / 44 / 61)
Max. Border Force relative	%		100	
Force Constant 1	N/A_{pk}	(lbf/A_{pk})	44	(9.89)
Force Constant 2	N/A_{rms}	(lbf/A_{rms})	62.2	(14)
Velocity				
Max. Velocity @ 1x230VAC	m/s	(in/s)	4.1	(159.9)
Max. Velocity @ 3x400VAC	m/s	(in/s)	7.1	(7.1)
Position Detection				
Repeatability	mm	(in)	±0.05	(±0.002)
Linearity	%		± 0.25	
Electrical Data				
Max. Current @ 1x230VAC	A_{pk} / A_{rms}		19.7 / 13.9	
Max. Current @ 3x400VAC	A_{pk} / A_{rms}		19.7 / 13.9	
Max. Cont. Current 1 [Passive cooling /Fan / Fluid]	A_{pk}		3.1 / 4.4 / 6.2	
Max. Cont. Current 2 [Passive cooling /Fan / Fluid]	A_{rms}		2.2 / 3.1 / 4.4	
Thermal Data				
Max. Winding Temperature (Sensor)	°C		90	
Thermal Resistance [Passive cooling / Fan / Fluid]	°K/W		1.1 / 0.53 / 0.27	
Thermal Time Constant [Passive cooling / Fan / Fluid]	s		1400 / 660 / 340	
Mechanical Data				
Slider Length	mm	(in)	920	(36)
Slider Mass	g	(lb)	4120	(9.06)

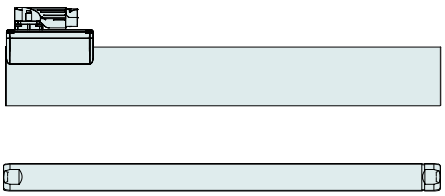

Item	Description	Item-No.
PS10-54x300U-BL-TU	Stator 3x400VAC, LinMot Encoder	0150-2725
PS10-54x300U-BL-TU-D24	Stator 3x400VAC, A/B Encoder, Pt1000	0150-2751
PS10-54x300U-BL-TU-D25	Stator 3x400VAC, A/B Encoder, PTC	0150-2755
PS10-54x300U-BL-TU-D25S	Stator 3x400VAC, A/B Encoder 5um, PTC	0150-2785
PL01-28x920/840	Slider 'standard'	0150-1386

P10-54x300U/550-BL-TU

Max. Stroke: 550 mm
Peak Force: 871 N

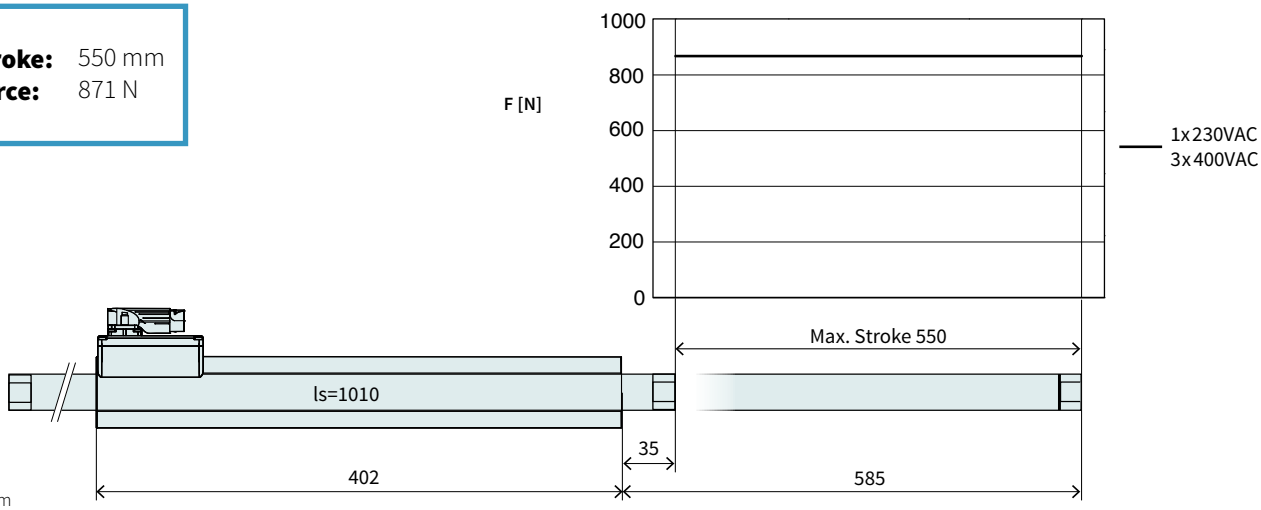

Dimensions in mm

Technical Data P10-54x300U/550				
Stroke				
Max. Stroke	mm	(in)	550	(21.69)
Force				
Max. Force @ 1x230VAC	N	(lbf)	871	(196)
Max. Force @ 3x400VAC	N	(lbf)	871	(196)
Max. Cont. Force [Passive cooling/ Fan / Fluid]	N	(lbf)	140 / 190 / 270	(31 / 44 / 61)
Max. Border Force relative	%		100	
Force Constant 1	N/A_{pk}	(lbf/A_{pk})	44	(9.89)
Force Constant 2	N/A_{rms}	(lbf/A_{rms})	62.2	(14)
Velocity				
Max. Velocity @ 1x230VAC	m/s	(in/s)	4.1	(159.9)
Max. Velocity @ 3x400VAC	m/s	(in/s)	7.1	(7.1)
Position Detection				
Repeatability	mm	(in)	±0.05	(±0.002)
Linearity	%		± 0.25	
Electrical Data				
Max. Current @ 1x230VAC	A_{pk} / A_{rms}		19.7 / 13.9	
Max. Current @ 3x400VAC	A_{pk} / A_{rms}		19.7 / 13.9	
Max. Cont. Current 1 [Passive cooling /Fan / Fluid]	A_{pk}		3.1 / 4.4 / 6.2	
Max. Cont. Current 2 [Passive cooling /Fan / Fluid]	A_{rms}		2.2 / 3.1 / 4.4	
Thermal Data				
Max. Winding Temperature (Sensor)	°C		90	
Thermal Resistance [Passive cooling / Fan / Fluid]	°K/W		1.1 / 0.53 / 0.27	
Thermal Time Constant [Passive cooling / Fan / Fluid]	s		1400 / 660 / 340	
Mechanical Data				
Slider Length	mm	(in)	1010	(40)
Slider Mass	g	(lb)	4540	(10)

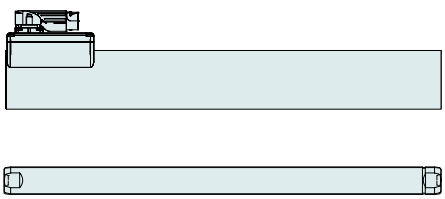

Item	Description	Item-No.
PS10-54x300U-BL-TU	Stator 3x400VAC, LinMot Encoder	0150-2725
PS10-54x300U-BL-TU-D24	Stator 3x400VAC, A/B Encoder, Pt1000	0150-2751
PS10-54x300U-BL-TU-D25	Stator 3x400VAC, A/B Encoder, PTC	0150-2755
PS10-54x300U-BL-TU-D25S	Stator 3x400VAC, A/B Encoder 5um, PTC	0150-2785
PL01-28x1010/930	Slider 'standard'	0150-1387

P10-54x300U/760-BL-TU

Max. Stroke: 760 mm
Peak Force: 871 N

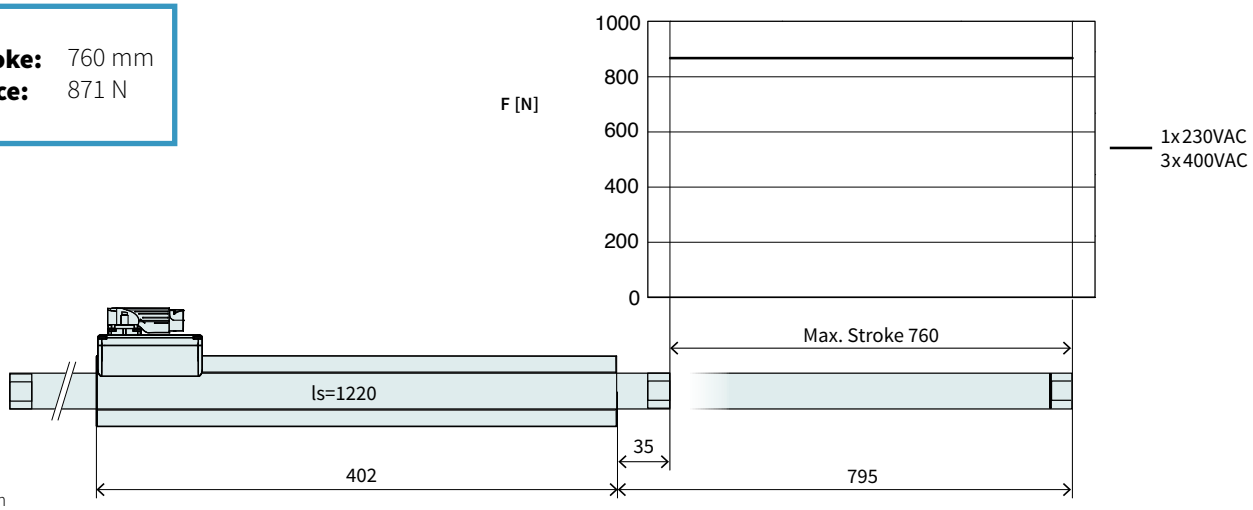

Dimensions in mm

Technical Data P10-54x300U/760				
Stroke				
Max. Stroke	mm	(in)	760	(29.89)
Force				
Max. Force @ 1x230VAC	N	(lbf)	871	(196)
Max. Force @ 3x400VAC	N	(lbf)	871	(196)
Max. Cont. Force [Passive cooling/ Fan / Fluid]	N	(lbf)	140 / 190 / 270	(31 / 44 / 61)
Max. Border Force relative	%		100	
Force Constant 1	N/A_{pk}	(lbf/A_{pk})	44	(9.89)
Force Constant 2	N/A_{rms}	(lbf/A_{rms})	62.2	(14)
Velocity				
Max. Velocity @ 1x230VAC	m/s	(in/s)	4.1	(159.9)
Max. Velocity @ 3x400VAC	m/s	(in/s)	7.1	(7.1)
Position Detection				
Repeatability	mm	(in)	±0.05	(±0.002)
Linearity	%		± 0.2	
Electrical Data				
Max. Current @ 1x230VAC	A_{pk} / A_{rms}		19.7 / 13.9	
Max. Current @ 3x400VAC	A_{pk} / A_{rms}		19.7 / 13.9	
Max. Cont. Current 1 [Passive cooling /Fan / Fluid]	A_{pk}		3.1 / 4.4 / 6.2	
Max. Cont. Current 2 [Passive cooling /Fan / Fluid]	A_{rms}		2.2 / 3.1 / 4.4	
Thermal Data				
Max. Winding Temperature (Sensor)	°C		90	
Thermal Resistance [Passive cooling / Fan / Fluid]	°K/W		1.1 / 0.53 / 0.27	
Thermal Time Constant [Passive cooling / Fan / Fluid]	s		1400 / 660 / 340	
Mechanical Data				
Slider Length	mm	(in)	1220	(48)
Slider Mass	g	(lb)	5510	(12.12)

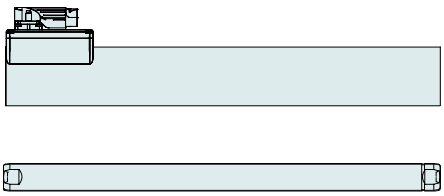

Item	Description	Item-No.
PS10-54x300U-BL-TU	Stator 3x400VAC, LinMot Encoder	0150-2725
PS10-54x300U-BL-TU-D24	Stator 3x400VAC, A/B Encoder, Pt1000	0150-2751
PS10-54x300U-BL-TU-D25	Stator 3x400VAC, A/B Encoder, PTC	0150-2755
PS10-54x300U-BL-TU-D25S	Stator 3x400VAC, A/B Encoder 5um, PTC	0150-2785
PL01-28x1220/1140	Slider 'standard'	0150-1388

P10-54x300U/940-BL-TU

Max. Stroke: 940 mm
Peak Force: 871 N

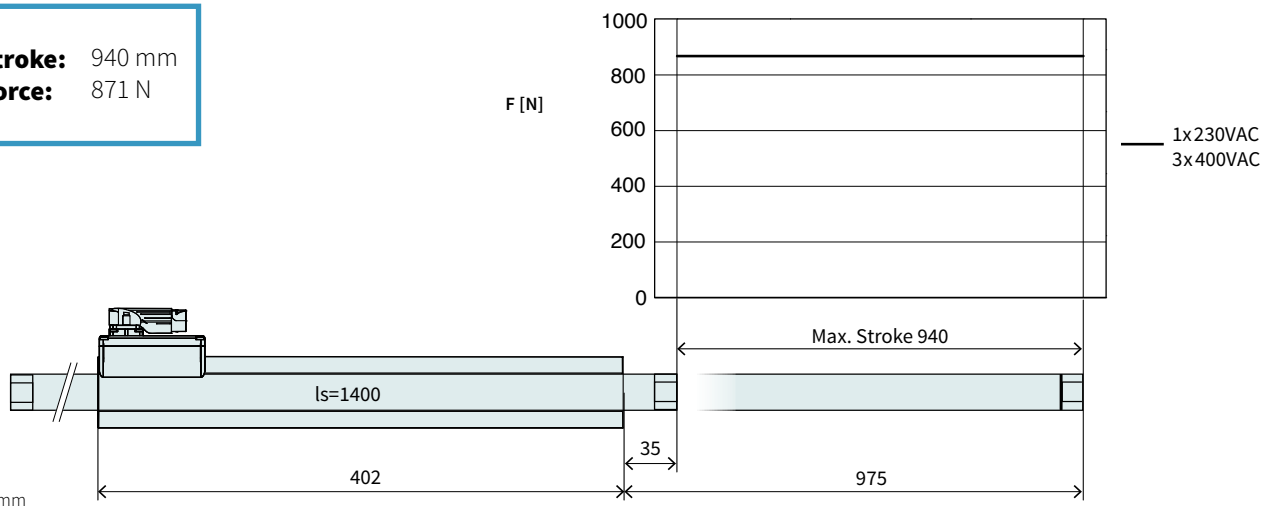

Dimensions in mm

Technical Data P10-54x300U/940				
Stroke				
Max. Stroke	mm	(in)	940	(36.99)
Force				
Max. Force @ 1x230VAC	N	(lbf)	871	(196)
Max. Force @ 3x400VAC	N	(lbf)	871	(196)
Max. Cont. Force [Passive cooling/ Fan / Fluid]	N	(lbf)	140 / 190 / 270	(31 / 44 / 61)
Max. Border Force relative	%		100	
Force Constant 1	N/A_{pk}	(lbf/A_{pk})	44	(9.89)
Force Constant 2	N/A_{rms}	(lbf/A_{rms})	62.2	(14)
Velocity				
Max. Velocity @ 1x230VAC	m/s	(in/s)	4.1	(159.9)
Max. Velocity @ 3x400VAC	m/s	(in/s)	7.1	(7.1)
Position Detection				
Repeatability	mm	(in)	±0.05	(±0.002)
Linearity	%		± 0.2	
Electrical Data				
Max. Current @ 1x230VAC	A_{pk} / A_{rms}		19.7 / 13.9	
Max. Current @ 3x400VAC	A_{pk} / A_{rms}		19.7 / 13.9	
Max. Cont. Current 1 [Passive cooling /Fan / Fluid]	A_{pk}		3.1 / 4.4 / 6.2	
Max. Cont. Current 2 [Passive cooling /Fan / Fluid]	A_{rms}		2.2 / 3.1 / 4.4	
Thermal Data				
Max. Winding Temperature (Sensor)	°C		90	
Thermal Resistance [Passive cooling / Fan / Fluid]	°K/W		1.1 / 0.53 / 0.27	
Thermal Time Constant [Passive cooling / Fan / Fluid]	s		1400 / 660 / 340	
Mechanical Data				
Slider Length	mm	(in)	1400	(55)
Slider Mass	g	(lb)	6350	(13.97)

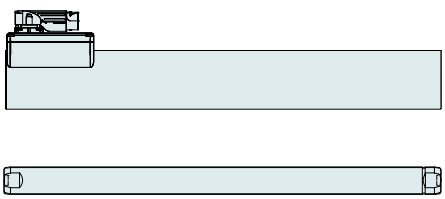

Item	Description	Item-No.
PS10-54x300U-BL-TU	Stator 3x400VAC, LinMot Encoder	0150-2725
PS10-54x300U-BL-TU-D24	Stator 3x400VAC, A/B Encoder, Pt1000	0150-2751
PS10-54x300U-BL-TU-D25	Stator 3x400VAC, A/B Encoder, PTC	0150-2755
PS10-54x300U-BL-TU-D25S	Stator 3x400VAC, A/B Encoder 5um, PTC	0150-2785
PL01-28x1400/1320	Slider 'standard'	0150-1389

P10-54x300U/1150-BL-TU

Max. Stroke: 1150 mm
Peak Force: 871 N

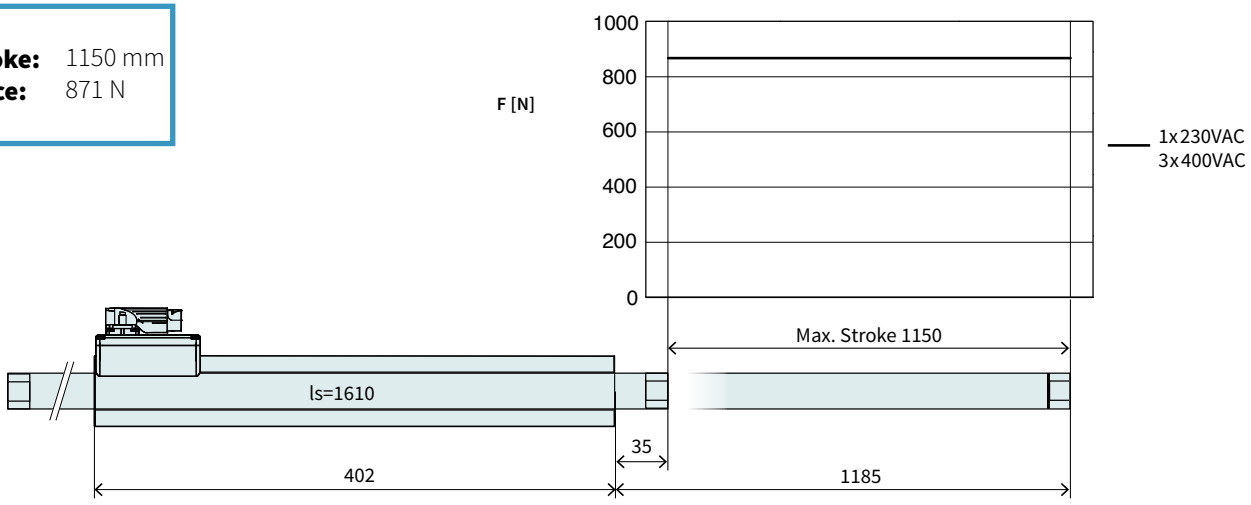

Dimensions in mm

Technical Data P10-54x300U/1150				
Stroke				
Max. Stroke	mm	(in)	1150	(45.29)
Force				
Max. Force @ 1x230VAC	N	(lbf)	871	(196)
Max. Force @ 3x400VAC	N	(lbf)	871	(196)
Max. Cont. Force [Passive cooling/ Fan / Fluid]	N	(lbf)	140 / 190 / 270	(31 / 44 / 61)
Max. Border Force relative	%		100	
Force Constant 1	N/A_{pk}	(lbf/A_{pk})	44	(9.89)
Force Constant 2	N/A_{rms}	(lbf/A_{rms})	62.2	(14)
Velocity				
Max. Velocity @ 1x230VAC	m/s	(in/s)	4.1	(159.9)
Max. Velocity @ 3x400VAC	m/s	(in/s)	7.1	(7.1)
Position Detection				
Repeatability	mm	(in)	±0.05	(±0.002)
Linearity	%		± 0.15	
Electrical Data				
Max. Current @ 1x230VAC	A_{pk} / A_{rms}		19.7 / 13.9	
Max. Current @ 3x400VAC	A_{pk} / A_{rms}		19.7 / 13.9	
Max. Cont. Current 1 [Passive cooling /Fan / Fluid]	A_{pk}		3.1 / 4.4 / 6.2	
Max. Cont. Current 2 [Passive cooling /Fan / Fluid]	A_{rms}		2.2 / 3.1 / 4.4	
Thermal Data				
Max. Winding Temperature (Sensor)	°C		90	
Thermal Resistance [Passive cooling / Fan / Fluid]	°K/W		1.1 / 0.53 / 0.27	
Thermal Time Constant [Passive cooling / Fan / Fluid]	s		1400 / 660 / 340	
Mechanical Data				
Slider Length	mm	(in)	1610	(63)
Slider Mass	g	(lb)	7330	(16.13)

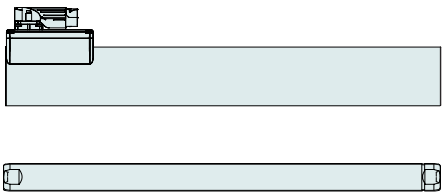

Item	Description	Item-No.
PS10-54x300U-BL-TU	Stator 3x400VAC, LinMot Encoder	0150-2725
PS10-54x300U-BL-TU-D24	Stator 3x400VAC, A/B Encoder, Pt1000	0150-2751
PS10-54x300U-BL-TU-D25	Stator 3x400VAC, A/B Encoder, PTC	0150-2755
PS10-54x300U-BL-TU-D25S	Stator 3x400VAC, A/B Encoder 5um, PTC	0150-2785
PL01-28x1610/1530	Slider 'standard'	0150-1390

P10-54x300U/1360-BL-TU

Max. Stroke: 1360 mm
Peak Force: 871 N

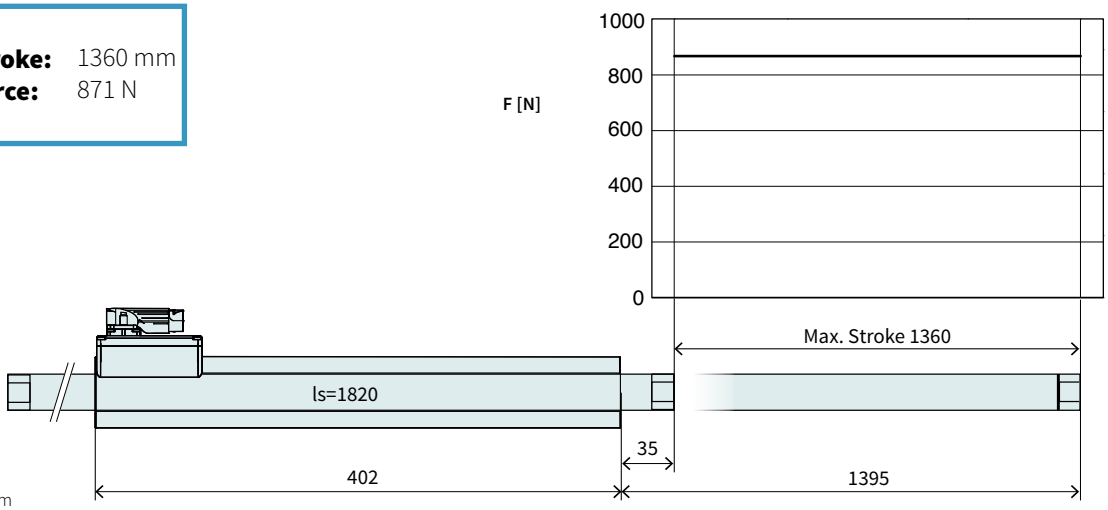

Dimensions in mm

Technical Data P10-54x300U/1360				
Stroke				
Max. Stroke	mm	(in)	1360	(53.49)
Force				
Max. Force @ 1x230VAC	N	(lbf)	871	(196)
Max. Force @ 3x400VAC	N	(lbf)	871	(196)
Max. Cont. Force [Passive cooling/ Fan / Fluid]	N	(lbf)	140 / 190 / 270	(31 / 44 / 61)
Max. Border Force relative	%		100	
Force Constant 1	N/A_{pk}	(lbf/A_{pk})	44	(9.89)
Force Constant 2	N/A_{rms}	(lbf/A_{rms})	62.2	(14)
Velocity				
Max. Velocity @ 1x230VAC	m/s	(in/s)	4.1	(159.9)
Max. Velocity @ 3x400VAC	m/s	(in/s)	7.1	(7.1)
Position Detection				
Repeatability	mm	(in)	±0.05	(±0.002)
Linearity	%		± 0.15	
Electrical Data				
Max. Current @ 1x230VAC	A_{pk} / A_{rms}		19.7 / 13.9	
Max. Current @ 3x400VAC	A_{pk} / A_{rms}		19.7 / 13.9	
Max. Cont. Current 1 [Passive cooling /Fan / Fluid]	A_{pk}		3.1 / 4.4 / 6.2	
Max. Cont. Current 2 [Passive cooling /Fan / Fluid]	A_{rms}		2.2 / 3.1 / 4.4	
Thermal Data				
Max. Winding Temperature (Sensor)	°C		90	
Thermal Resistance [Passive cooling / Fan / Fluid]	°K/W		1.1 / 0.53 / 0.27	
Thermal Time Constant [Passive cooling / Fan / Fluid]	s		1400 / 660 / 340	
Mechanical Data				
Slider Length	mm	(in)	1820	(72)
Slider Mass	g	(lb)	8300	(18.26)

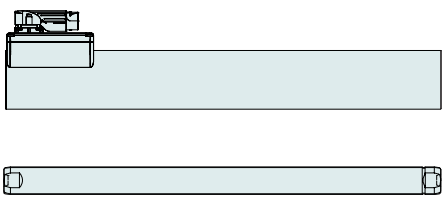

Item	Description	Item-No.
PS10-54x300U-BL-TU	Stator 3x400VAC, LinMot Encoder	0150-2725
PS10-54x300U-BL-TU-D24	Stator 3x400VAC, A/B Encoder, Pt1000	0150-2751
PS10-54x300U-BL-TU-D25	Stator 3x400VAC, A/B Encoder, PTC	0150-2755
PS10-54x300U-BL-TU-D25S	Stator 3x400VAC, A/B Encoder 5um, PTC	0150-2785
PL01-28x1820/1740	Slider 'standard'	0150-1395

P10-54x300U/1540-BL-TU

4

Max. Stroke: 1540 mm
Peak Force: 871 N

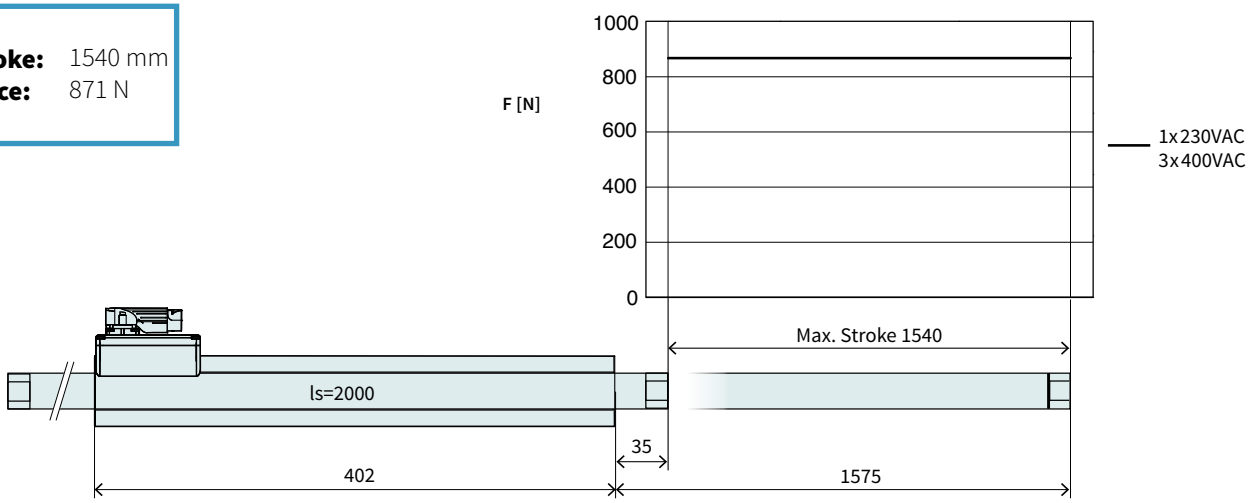

Dimensions in mm

Technical Data P10-54x300U/1540				
Stroke				
Max. Stroke	mm	(in)	1540	(60.6)
Force				
Max. Force @ 1x230VAC	N	(lbf)	871	(196)
Max. Force @ 3x400VAC	N	(lbf)	871	(196)
Max. Cont. Force [Passive cooling/ Fan / Fluid]	N	(lbf)	140 / 190 / 270	(31 / 44 / 61)
Max. Border Force relative	%		100	
Force Constant 1	N/A_{pk}	(lbf/A_{pk})	44	(9.89)
Force Constant 2	N/A_{rms}	(lbf/A_{rms})	62.2	(14)
Velocity				
Max. Velocity @ 1x230VAC	m/s	(in/s)	4.1	(159.9)
Max. Velocity @ 3x400VAC	m/s	(in/s)	7.1	(7.1)
Position Detection				
Repeatability	mm	(in)	±0.05	(±0.002)
Linearity	%		± 0.15	
Electrical Data				
Max. Current @ 1x230VAC	A_{pk} / A_{rms}		19.7 / 13.9	
Max. Current @ 3x400VAC	A_{pk} / A_{rms}		19.7 / 13.9	
Max. Cont. Current 1 [Passive cooling /Fan / Fluid]	A_{pk}		3.1 / 4.4 / 6.2	
Max. Cont. Current 2 [Passive cooling /Fan / Fluid]	A_{rms}		2.2 / 3.1 / 4.4	
Thermal Data				
Max. Winding Temperature (Sensor)	°C		90	
Thermal Resistance [Passive cooling / Fan / Fluid]	°K/W		1.1 / 0.53 / 0.27	
Thermal Time Constant [Passive cooling / Fan / Fluid]	s		1400 / 660 / 340	
Mechanical Data				
Slider Length	mm	(in)	2000	(79)
Slider Mass	g	(lb)	9140	(20.11)

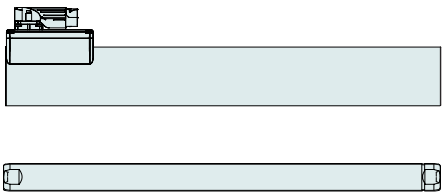

Item	Description	Item-No.
PS10-54x300U-BL-TU	Stator 3x400VAC, LinMot Encoder	0150-2725
PS10-54x300U-BL-TU-D24	Stator 3x400VAC, A/B Encoder, Pt1000	0150-2751
PS10-54x300U-BL-TU-D25	Stator 3x400VAC, A/B Encoder, PTC	0150-2755
PS10-54x300U-BL-TU-D25S	Stator 3x400VAC, A/B Encoder 5um, PTC	0150-2785
PL01-28x2000/1920	Slider 'standard'	0150-1396

Motor Cable

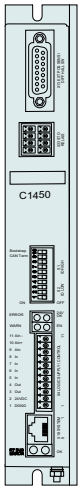

C1400

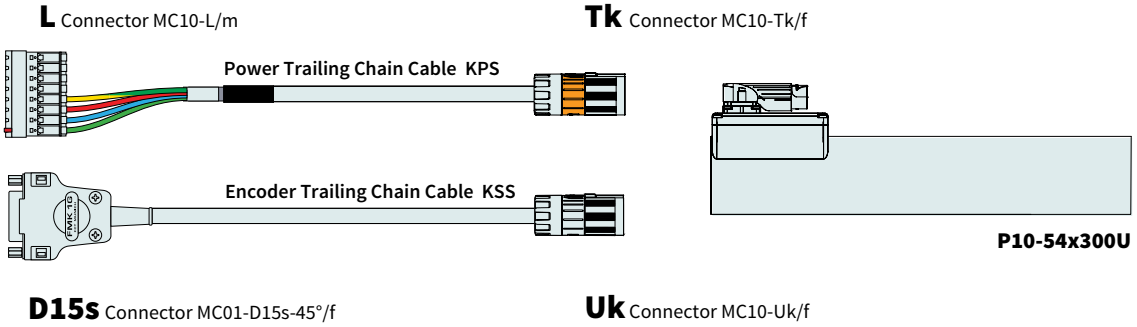



E1400

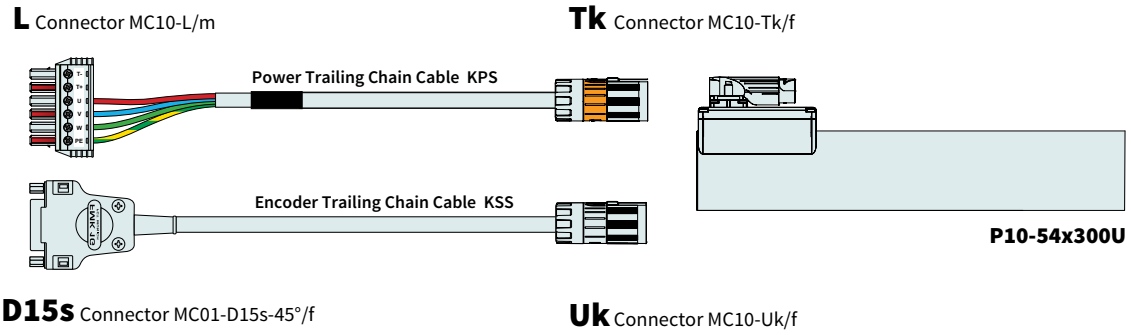

ORDERING INFORMATION

TRAILING CHAIN CABLE FOR LINMOT DRIVES		
Item	**Description**	**Item-No.**
KPS07-04/02-L/Tk-3	Power Trailing Chain Cable E1400/P10-54, 3 m	0150-2670
KPS07-04/02-L/Tk-5	Power Trailing Chain Cable E1400/P10-54, 5 m	0150-2671
KPS07-04/02-L/Tk-8	Power Trailing Chain Cable E1400/P10-54, 8 m	0150-2672
KPS07-04/02-L/Tk-12	Power Trailing Chain Cable E1400/P10-54, 12 m	0150-2673
KPS07-04/02-B/Tk-3	Power Trailing Chain Cable C1400/P10-54, 3 m	0150-3648
KPS07-04/02-B/Tk-5	Power Trailing Chain Cable C1400/P10-54, 5 m	0150-3657
KPS07-04/02-B/Tk-8	Power Trailing Chain Cable C1400/P10-54, 8 m	0150-3658
KPS07-04/02-B/Tk-12	Power Trailing Chain Cable C1400/P10-54, 12 m	0150-3659
KSS 05-02/08-D15s/Uk-3	Encoder Trailing Chain Cable D15s/Uk, 3 m	0150-2650
KSS 05-02/08-D15s/Uk-5	Encoder Trailing Chain Cable D15s/Uk, 5 m	0150-2651
KSS 05-02/08-D15s/Uk-8	Encoder Trailing Chain Cable D15s/Uk, 8 m	0150-2652
KSS 05-02/08-D15s/Uk-12	Encoder Trailing Chain Cable D15s/Uk, 12 m	0150-2653

TRAILING CHAIN CABLES FOR THIRD PARTY DRIVES		
Item	**Description**	**Item-No.**
KPS07-04/02-./Tk-10	Power Trailing Chain Cable .../Tk, 10 m	0150-3626
KPS07-04/02-./Tk-	Power Trailing Chain Cable .../Tk, Custom length	0150-3622
KSS05-02/13-./Uk-10	Encoder Trailing Chain Cable ./Uk, 10 m	0150-3627
KSS05-02/13-./Uk-	Encoder Trailing Chain Cable ./Uk, Custom length	0150-3619

CONNECTOR & CABLE (INDIVIDUAL)		
Item	**Description**	**Item-No.**
MC10-L/m	Connector Power E1400/X2	0150-3382
MC01-D15/f	Motor Connector D15 (f)	0150-3136
MC10-Tk/f	Connector Power PS10-54	0150-3482
MC10-Uk/f	Connector Encoder PS10-54	0150-3483
KPS07-04/02	Power Trailing Chain Cable P10-54 (per m)	0150-2372
KSS05-02/08	Trailing Chain Cable Encoder LinMot (per m)	0150-2258
KSS05-02/13	Trailing Chain Cable Encoder P10-...-Dxx (per m)	0150-2259

MOTOR FLANGES



Item	Description	Item-No.
PF10-54x320	Flange for PS10-54x300	0150-2736

FIND MORE PRODUCT DETAILS IN THE CHAPTER "ACCESSORIES".

FANS



Item	Description	Item-No.
HV01-37/48	Fan cooling for H01-37/48 &PF02-37/48	0150-5051

FIND MORE PRODUCT DETAILS IN THE CHAPTER "ACCESSORIES".

SLIDER MOUNTING



Item	Description	Item-No.
PLF01-28	Fixed Bearing Set for 27/28 mm sliders	0150-3087
PLF01-28-SS	Fixed Bearing Set for 27/28 mm sliders, stainless steel	0150-3297
PLL01-28	Floating Bearing for 28 mm sliders	0150-3094
PLM01-28-MK	Mounting Kit for 28 mm sliders	0150-3095

FIND MORE PRODUCT DETAILS IN THE CHAPTER "ACCESSORIES".

BEARING KIT

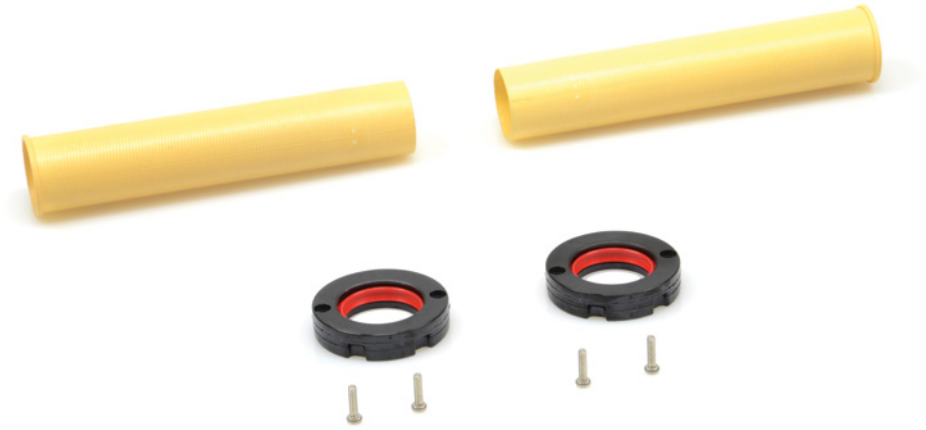

Item	Description	Item-No.
PB10-54x300-L	Bearing Kit for PS10-54x300	0150-3674

FIND MORE PRODUCT DETAILS IN THE CHAPTER "ACCESSORIES".

EXTERNAL POSITION SENSORS



Item	Description	Item-No.
MS01-1/D	Linear Encoder 1µm, A/B (for incremental strip)	0150-1840
MB01-1000	Magnetic incremental strip for MS01-1/D, per cm	0150-1963
KS025-D15/D-Encoder	Encoder Cable (Length in m)	0150-3168

FIND MORE PRODUCT DETAILS IN THE CHAPTER "ACCESSORIES".



Item	Description	Item-No.
MS01-1/D-SSI	Linear Encoder 1µm, A/B (for absolute strip)	0150-2095
MB01-1000-ABS	Magnetic absolute strip for MS01-1/D-SSI (per cm)	0150-2096
EC01-ABS/ENC-12-S	MS01-1/D-SSI Encoder connector straight	0150-3616
KSS01-12-D15/ABS-ENC	Special cable for MS01-1/D-SSI on C1100/C1200/C1400/E1200/E1400 Drives	0150-3652

FIND MORE PRODUCT DETAILS IN THE CHAPTER "ACCESSORIES".

LINEAR MOTORS P10-70x80U



- 3 x 400VAC technology
- Peak forces up to 561 N
- Extremely high dynamic
- Separate connector for sensor and power cable
- Can also be controlled by standard third-party servo drives

4

LINEAR MOTORS P10-70x80U

Technical Data ____ **491**

Motor Specifications

P10-70x80U/70 ..... **496**
P10-70x80U/170 ..... **497**
P10-70x80U/270 ..... **498**
P10-70x80U/370 ..... **499**
P10-70x80U/470 ..... **500**
P10-70x80U/570 ..... **501**
P10-70x80U/670 ..... **502**
P10-70x80U/770 ..... **503**
P10-70x80U/970 ..... **504**
P10-70x80U/1170 ..... **505**
P10-70x80U/1370 ..... **506**
P10-70x80U/1570 ..... **507**
P10-70x80U/1770 ..... **508**

Linear Guides ____ **509**

Accessories ____ **511**

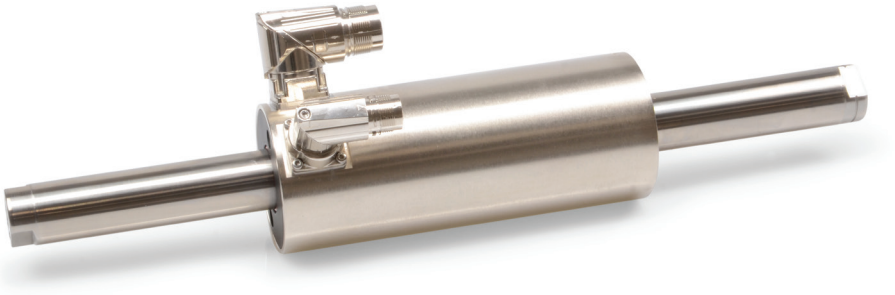

MOTOR FAMILY P10-70x80U

Technical Data				
Stroke				
Max. Stroke (ES)	mm	(in)	1770	(69.7)
Force				
Max. Force @ 1x230VAC	N	(lbf)	561	(126)
Max. Force @ 3x400VAC	N	(lbf)	561	(126)
Max. Cont. Force [Passive cooling/ Fan / Fluid]	N	(lbf)	67 / 100 / 180	(15 / 23 / 41)
Max. Border Force relative	%		100	
Force Constant 1	N/A_{pk}	(lbf/A_{pk})	51	(11.5)
Force Constant 2	N/A_{rms}	(lbf/A_{rms})	72.1	(16.2)
Velocity				
Max. Velocity @ 1x230VAC	m/s	(in/s)	3.5	(139.9)
Max. Velocity @ 3x400VAC	m/s	(in/s)	6.1	(249.9)
Position Detection				
Position Resolution	mm	(in)	0.005	(0.0002)
Repeatability	mm	(in)	±0.05	(±0.002)
Position Resolution with ES	mm	(in)	0.001	(0.00004)
Repeatability with ES	mm	(in)	±0.01	(±0.0004)
Linearity with ES	mm	(in)	±0.01	(±0.0004)
Electrical Data				
Max. Current @ 1x230VAC	A_{pk} / A_{rms}		10.9 / 7.7	
Max. Current @ 3x400VAC	A_{pk} / A_{rms}		10.9 / 7.7	
Max. Cont. Current 1 [Passive cooling /Fan / Fluid]	A_{pk}		1.3 / 2 / 3.5	
Max. Cont. Current 2 [Passive cooling /Fan / Fluid]	A_{rms}		0.93 / 1.4 / 2.5	
Back EMF Constant	V_{pk} / (m/s)	(V_{pk} / (in/s))	58.9	(1.5)
Terminal Resistance 25 °C / 120 °C	Ohm		13 / 18	
Terminal Inductivity	mH		25	
Magnetic Period	mm	(in)	40	(1.57)
Thermal Data				
Max. Winding Temperature (Sensor)	°C		90	
Thermal Resistance [Passive cooling / Fan / Fluid]	°K/W		2.6 / 1.1 / 0.36	
Thermal Time Constant [Passive cooling / Fan / Fluid]	s		2100 / 500 / 110	
Mechanical Data				
Stator Diameter	mm	(in)	70	(2.8)
Stator Length	mm	(in)	180	(7.1)
Stator Mass	g	(lb)	2850	(6.27)
Slider Diameter	mm	(in)	28	(1.1)
Slider Length	mm	(in)	290 - 1990	(11 - 78)
Slider Mass	g	(lb)	1360 - 9350	(3 - 20.57)
IP Code			IP 65	
Certification				
UL	File-No.		E354430	

4

STATOR

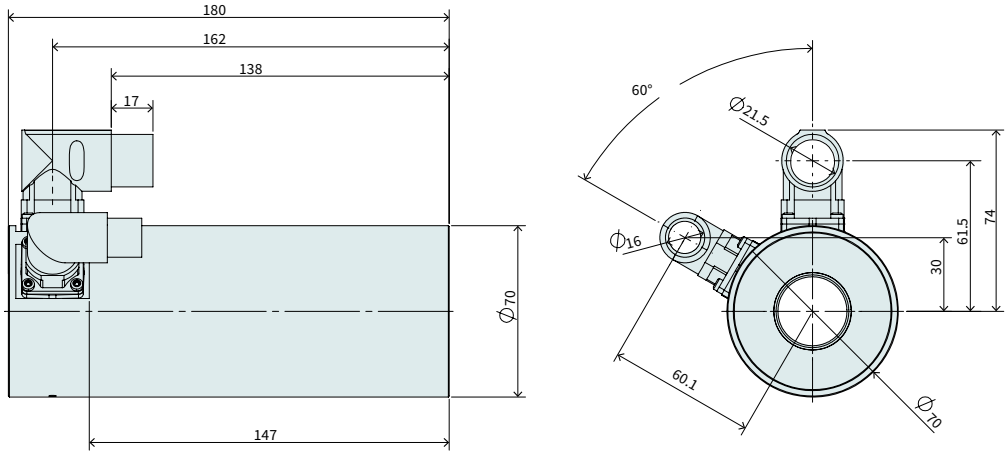

Item	Description	Item-No.
PS10-70x80U-BL-QJ	Stator 3x400VAC, LinMot Encoder	0150-1291
PS10-70x80U-BL-QJ-D01	Stator 3x400VAC, Sin/Cos Encoder 1Vpp, KTY	0150-2282
PS10-70x80U-BL-QJ-D02	Stator 3x400VAC, Sin/Cos Encoder 1Vpp, PTC	0150-2360
PS10-70x80U-BL-QJ-D03	Stator 3x400VAC, Sin/Cos 1Vpp, KTY on power connector	0150-2708

CONNECTOR PS10-70x80U-BL-QJ

Motor Connector Wiring		Connector Encoder J	Wire Color Motor Cable
+5 VDC	Supply	1	red
GND	Supply	2	black
Sense +5V	Supply Sense	3	white
Sense GND	Supply Sense	4	brown
Mot. Link C+	Communication	5	pink
Mot. Link C-	Communication	6	grey
Sin+	Encoder	7	yellow
Sin-	Encoder	8	orange
Cos+	Encoder	9	green
Cos-	Encoder	10	blue
n. c.	n. c.	11	n. c.
n. c.	n. c.	12	n. c.
n. c.	n. c.	13	n. c.
n. c.	n. c.	14	n. c.
n. c.	n. c.	15	n. c.
n. c.	n. c.	16	n. c.
n. c.	n. c.	17	n. c.

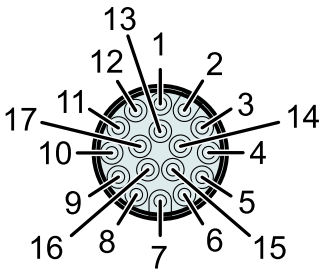

Connector Encoder J

View: Motor connector, plug side

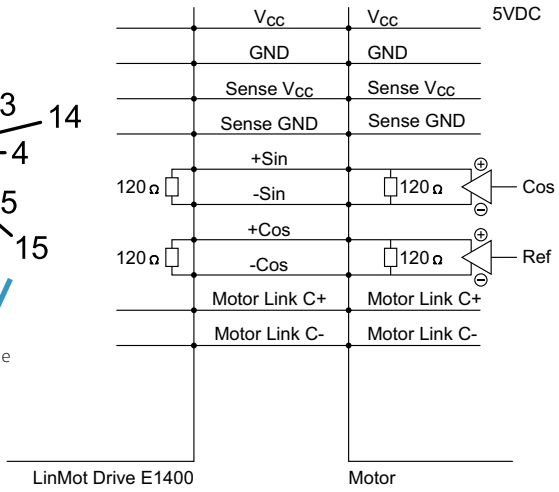

Motor Steckerbelegung	Connector Power Q	Wire Color Motor Cable
Phase U	1	red
PE	2	yellow-green
Phase W	3	green
Phase V	4	blue
n. c.	A	n. c.
n. c.	B	n. c.
n. c.	C	n. c.
n. c.	D	n. c.

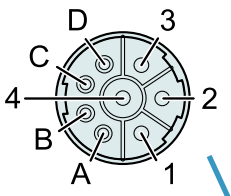

Connector Power Q

View: Motor connector, plug side

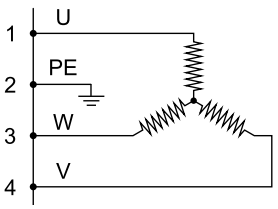

CONNECTOR PS10-70X80U-BL-QJ-D01/02

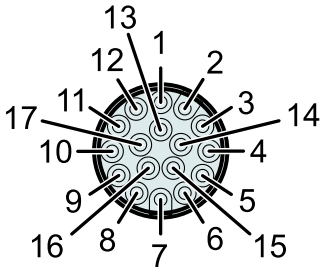

Connector Encoder J

View: Motor connector, plug side

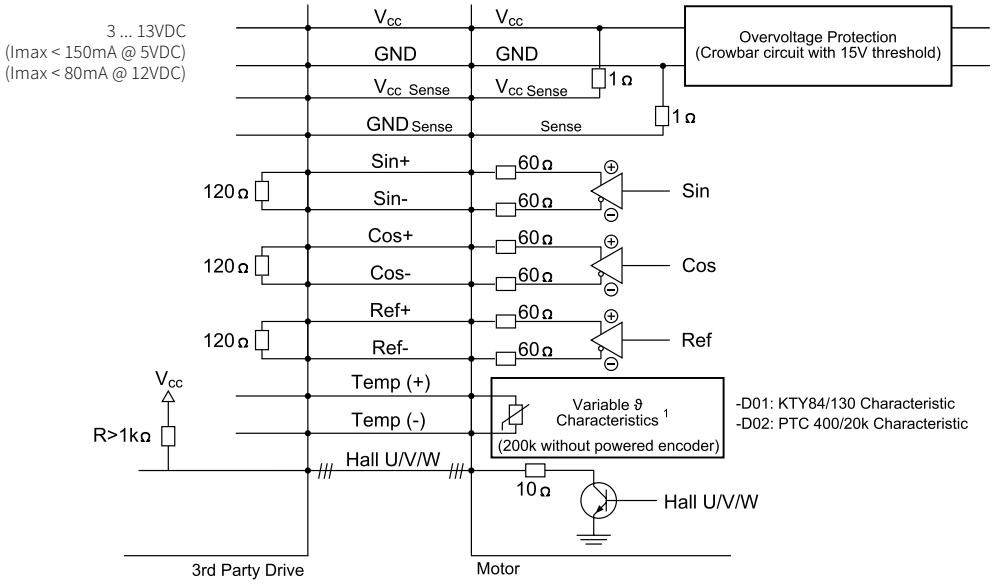

Motor Connector Wiring				
PS10-70x80U-BL-QJ-D01	PS10-70x80U-BL-QJ-D02	Function	Connector Encoder J	Wire Color Motor Cable
3 ... 13 VDC	3 ... 13 VDC	Supply	1	white
GND	GND	Supply	2	brown
Vcc Sense (optional)	Vcc Sense (optional)	Supply Sense	3	green
GND Sense (optional)	GND Sense (optional)	Supply Sense	4	yellow
Do not connect	Do not connect	–	5	–
Do not connect	Do not connect	–	6	–
Sin+	Sin+	Encoder 1 Vpp	7	grey
Sin-	Sin-	Encoder 1 Vpp	8	pink
Cos+	Cos+	Encoder 1 Vpp	9	blue
Cos-	Cos-	Encoder 1 Vpp	10	red
Ref+	Ref+	Encoder 1 Vpp	11	black
Ref-	Ref-	Encoder 1 Vpp	12	violett
Hall U	Hall U	Encoder (open collector)	13	grey-red
Hall V	Hall V	Encoder (open collector)	14	red-blue
Hall W	Hall W	Encoder (open collector)	15	white-green
Temp+ (KTY84/130 Char.)	Temp+ (PTC 400/20k Char.)	Temperature[1]	16	yellow-brown
Temp- (KTY84/130 Char.)	Temp- (PTC 400/20k Char.)	Temperature[1]	17	white-yellow

1) The temperature evaluation circiut must be powered from the encoder supply and must be at the same potential. The grounds of the temperature evaluation circuit and the encoder have to be connected. The encoder must have been powered on for at least 50 ms, before valid temperatures can be measured. If the encoder is powered off, 200k Ohms are measured between Pins 16 and 17. The maximum voltage between Pin 16 and 17 must not exceed 16 VDC. The maximum current must not exceed 15 mA.

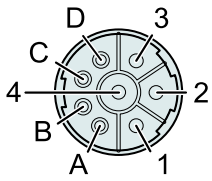

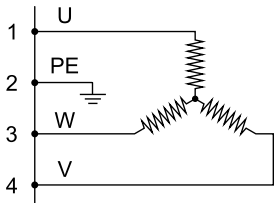

Connector Power Q

View: Motor connector, plug side

Motor Connector Wiring			
PS10-70x80U-BL-QJ-D01	PS10-70x80U-BL-QJ-D02	Connector Power Q	Wire Color Motor Cable
Phase U	Phase U	1	red
PE	PE	2	yellow-green
Phase W	Phase W	3	green
Phase V	Phase V	4	blue
n. c.	n. c.	A	n. c.
n. c.	n. c.	B	n. c.
n. c.	n. c.	C	n. c.
n. c.	n. c.	D	n. c.

CONNECTOR PS10-70X80U-BL-QJ-D03

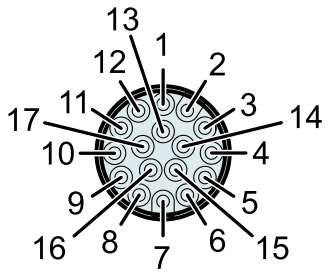

Connector Encoder J

View: Motor connector, plug side

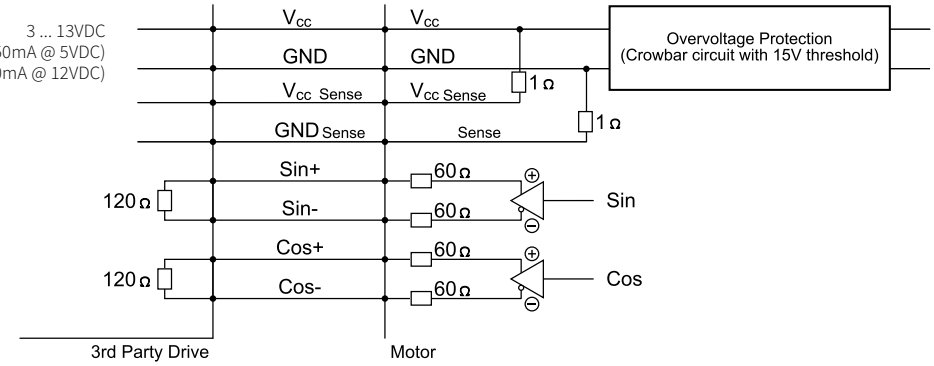

Motor Connector Wiring		Connector Encoder J	Wire Color Motor Cable
3 ... 13 VDC	Supply	1	red
GND	Supply	2	black
Vcc Sense (optional)	Supply Sense	3	white
GND Sense (optional)	Supply Sense	4	brown
Do not connect	–	5	–
Do not connect	–	6	–
Sin+	Encoder 1 Vpp	7	yellow
Sin-	Encoder 1 Vpp	8	orange
Cos+	Encoder 1 Vpp	9	green
Cos-	Encoder 1 Vpp	10	blue
n. c.	–	11	n. c.
n. c.	–	12	n. c.
n. c.	–	13	n. c.
Do not connect	–	14	n. c.
n. c.	–	15	n. c.
n. c.	–	16	n. c.
n. c.	–	17	n. c.

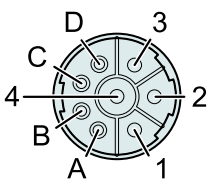

Connector Power Q

View: Motor connector, plug side

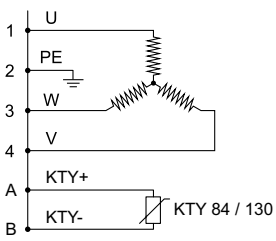

Motor Connector Wiring	Connector Power Q	Wire Color Motor Cable
Phase U	1	red (previously: black 1)
PE	2	yellow-green
Phase W	3	green (previously: black 3)
Phase V	4	blue (previously: black 2)
KTY +	A	purple (previously: black 5)
KTY -	B	grey (previously: black 6)
n. c.	C	yellow (previously: black 7)
n. c.	D	brown (previously: black 8)

SLIDER

Slider Standard

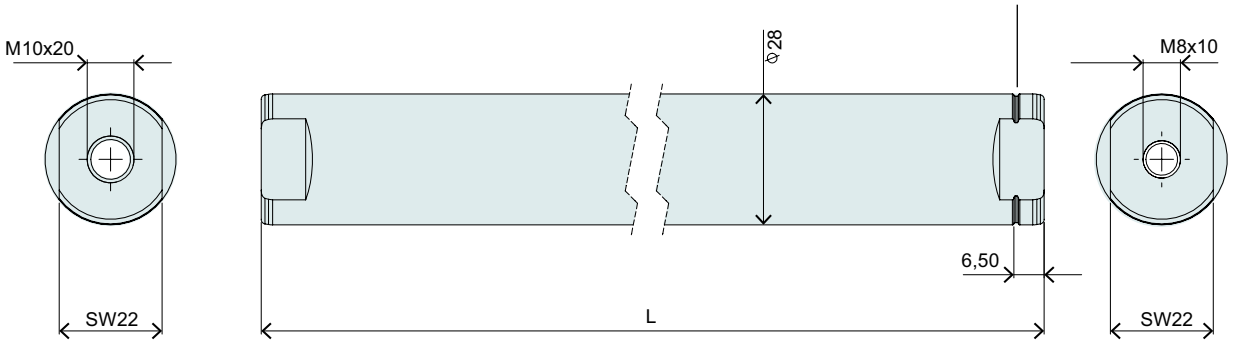

Slider Standard			
Item	**Description**	**Max. Stroke [mm]**	**Item-No.**
PL10-28x290/240	Slider for P10-70 'standard'	70	0150-2193
PL10-28x390/340	Slider for P10-70 'standard'	170	0150-2194
PL10-28x490/440	Slider for P10-70 'standard'	270	0150-2195
PL10-28x590/540	Slider for P10-70 'standard'	370	0150-2196
PL10-28x690/640	Slider for P10-70 'standard'	470	0150-2197
PL10-28x790/740	Slider for P10-70 'standard'	570	0150-2198
PL10-28x890/840	Slider for P10-70 'standard'	670	0150-2199
PL10-28x990/940	Slider for P10-70 'standard'	770	0150-2203
PL10-28x1190/1140	Slider for P10-70 'standard'	970	0150-2204
PL10-28x1390/1340	Slider for P10-70 'standard'	1170	0150-2205
PL10-28x1590/1540	Slider for P10-70 'standard'	1370	0150-2206
PL10-28x1790/1740	Slider for P10-70 'standard'	1570	0150-2207
PL10-28x1990/1940	Slider for P10-70 'standard'	1770	0150-2208

P10-70x80U/70-BL-QJ

Max. Stroke: 70 mm
Peak Force: 561 N

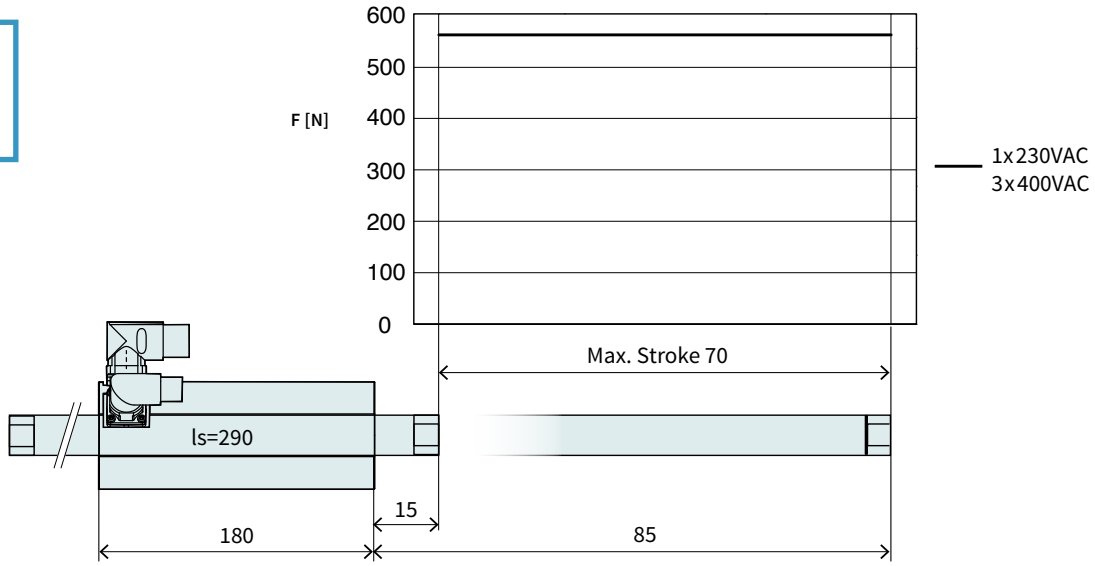

Dimensions in mm

Technical Data P10-70x80U/70				
Stroke				
Max. Stroke	mm	(in)	70	(2.75)
Force				
Max. Force @ 1x230VAC	N	(lbf)	561	(126)
Max. Force @ 3x400VAC	N	(lbf)	561	(126)
Max. Cont. Force [Passive cooling/ Fan / Fluid]	N	(lbf)	67 / 100 / 180	(15 / 23 / 41)
Max. Border Force relative	%		100	
Force Constant 1	N/A_{pk}	(lbf/A_{pk})	51	(11.5)
Force Constant 2	N/A_{rms}	(lbf/A_{rms})	72.1	(16.2)
Velocity				
Max. Velocity @ 1x230VAC	m/s	(in/s)	3.5	(139.9)
Max. Velocity @ 3x400VAC	m/s	(in/s)	6.1	(6.1)
Position Detection				
Repeatability	mm	(in)	±0.05	(±0.002)
Linearity	%		± 0.8	
Electrical Data				
Max. Current @ 1x230VAC	A_{pk} / A_{rms}		10.9 / 7.7	
Max. Current @ 3x400VAC	A_{pk} / A_{rms}		10.9 / 7.7	
Max. Cont. Current 1 [Passive cooling /Fan / Fluid]	A_{pk}		1.3 / 2 / 3.5	
Max. Cont. Current 2 [Passive cooling /Fan / Fluid]	A_{rms}		0.93 / 1.4 / 2.5	
Thermal Data				
Max. Winding Temperature (Sensor)	°C		90	
Thermal Resistance [Passive cooling / Fan / Fluid]	°K/W		2.6 / 1.1 / 0.36	
Thermal Time Constant [Passive cooling / Fan / Fluid]	s		2100 / 500 / 110	
Mechanical Data				
Slider Length	mm	(in)	290	(11)
Slider Mass	g	(lb)	1360	(3)

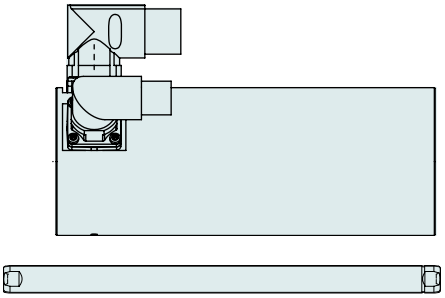

Item	Description	Item-No.
PS10-70x80U-BL-QJ	Stator 3x400VAC, LinMot Encoder	0150-1291
PS10-70x80U-BL-QJ-D01	Stator 3x400VAC, Sin/Cos Encoder 1Vpp, KTY	0150-2282
PS10-70x80U-BL-QJ-D02	Stator 3x400VAC, Sin/Cos Encoder 1Vpp, PTC	0150-2360
PS10-70x80U-BL-QJ-D03	Stator 3x400VAC, Sin/Cos 1Vpp, KTY on power connector	0150-2708
PL10-28x290/240	Slider for P10-70 'standard'	0150-2193

P10-70x80U/170-BL-QJ

Max. Stroke: 170 mm
Peak Force: 561 N

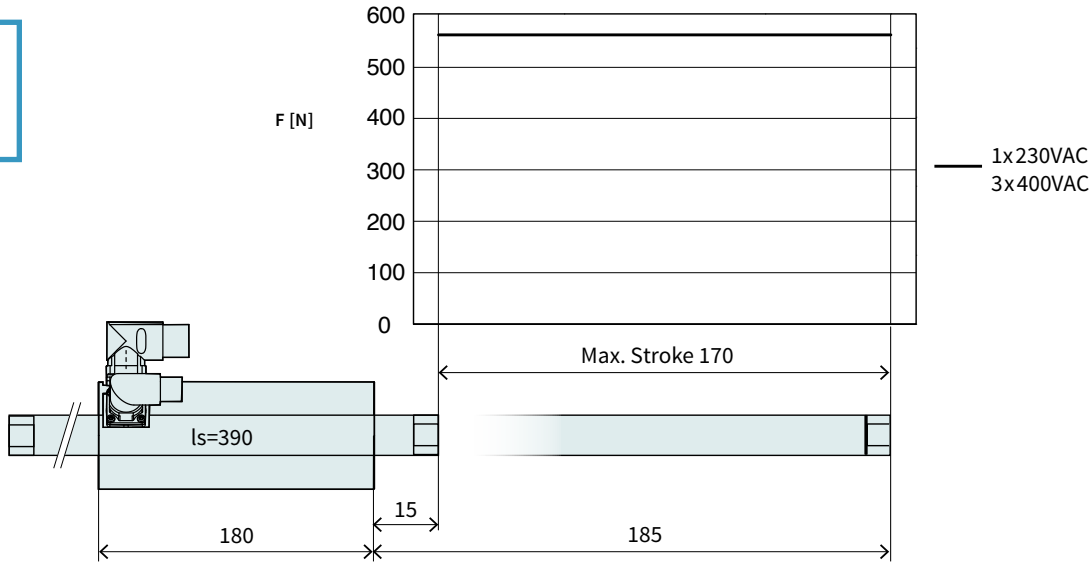

Dimensions in mm

Technical Data P10-70x80U/170				
Stroke				
Max. Stroke	mm	(in)	170	(6.69)
Force				
Max. Force @ 1x230VAC	N	(lbf)	561	(126)
Max. Force @ 3x400VAC	N	(lbf)	561	(126)
Max. Cont. Force [Passive cooling/ Fan / Fluid]	N	(lbf)	67 / 100 / 180	(15 / 23 / 41)
Max. Border Force relative	%		100	
Force Constant 1	N/A_{pk}	(lbf/A_{pk})	51	(11.5)
Force Constant 2	N/A_{rms}	(lbf/A_{rms})	72.1	(16.2)
Velocity				
Max. Velocity @ 1x230VAC	m/s	(in/s)	3.5	(139.9)
Max. Velocity @ 3x400VAC	m/s	(in/s)	6.1	(6.1)
Position Detection				
Repeatability	mm	(in)	±0.05	(±0.002)
Linearity	%		± 0.4	
Electrical Data				
Max. Current @ 1x230VAC	A_{pk} / A_{rms}		10.9 / 7.7	
Max. Current @ 3x400VAC	A_{pk} / A_{rms}		10.9 / 7.7	
Max. Cont. Current 1 [Passive cooling /Fan / Fluid]	A_{pk}		1.3 / 2 / 3.5	
Max. Cont. Current 2 [Passive cooling /Fan / Fluid]	A_{rms}		0.93 / 1.4 / 2.5	
Thermal Data				
Max. Winding Temperature (Sensor)	°C		90	
Thermal Resistance [Passive cooling / Fan / Fluid]	°K/W		2.6 / 1.1 / 0.36	
Thermal Time Constant [Passive cooling / Fan / Fluid]	s		2100 / 500 / 110	
Mechanical Data				
Slider Length	mm	(in)	390	(15)
Slider Mass	g	(lb)	1830	(4.03)

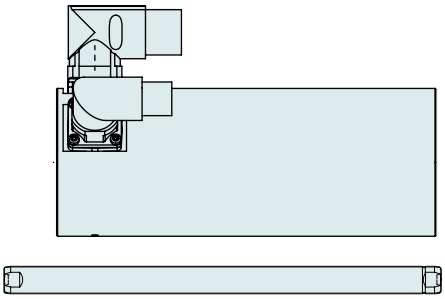

Item	Description	Item-No.
PS10-70x80U-BL-QJ	Stator 3x400VAC, LinMot Encoder	0150-1291
PS10-70x80U-BL-QJ-D01	Stator 3x400VAC, Sin/Cos Encoder 1Vpp, KTY	0150-2282
PS10-70x80U-BL-QJ-D02	Stator 3x400VAC, Sin/Cos Encoder 1Vpp, PTC	0150-2360
PS10-70x80U-BL-QJ-D03	Stator 3x400VAC, Sin/Cos 1Vpp, KTY on power connector	0150-2708
PL10-28x390/340	Slider for P10-70 'standard'	0150-2194

P10-70x80U/270-BL-QJ

Max. Stroke: 270 mm
Peak Force: 561 N

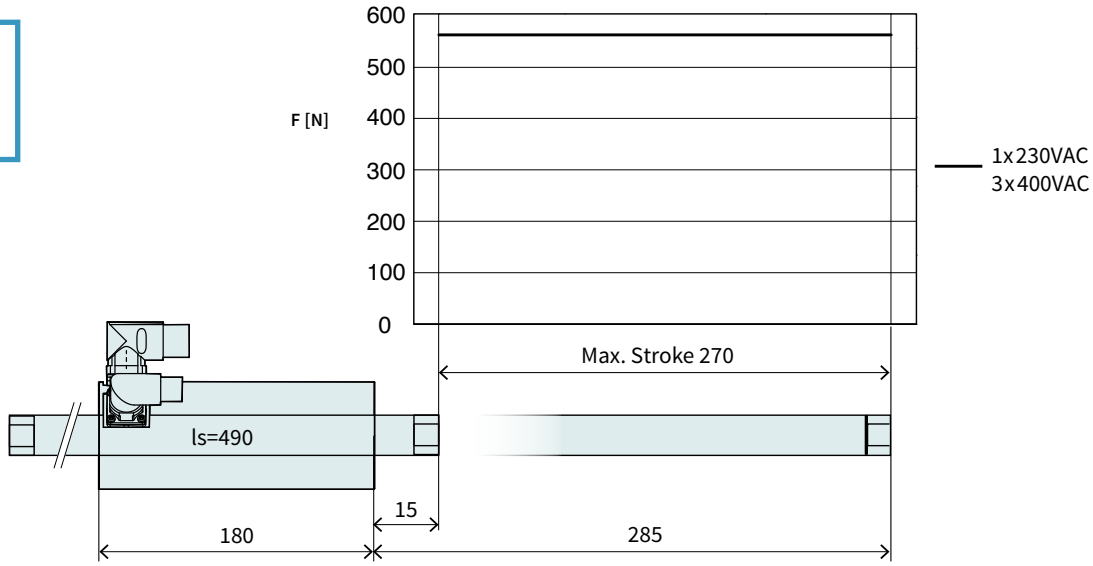

Dimensions in mm

Technical Data P10-70x80U/270				
Stroke				
Max. Stroke	mm	(in)	270	(10.59)
Force				
Max. Force @ 1x230VAC	N	(lbf)	561	(126)
Max. Force @ 3x400VAC	N	(lbf)	561	(126)
Max. Cont. Force [Passive cooling/ Fan / Fluid]	N	(lbf)	67 / 100 / 180	(15 / 23 / 41)
Max. Border Force relative	%		100	
Force Constant 1	N/A_{pk}	(lbf/A_{pk})	51	(11.5)
Force Constant 2	N/A_{rms}	(lbf/A_{rms})	72.1	(16.2)
Velocity				
Max. Velocity @ 1x230VAC	m/s	(in/s)	3.5	(139.9)
Max. Velocity @ 3x400VAC	m/s	(in/s)	6.1	(6.1)
Position Detection				
Repeatability	mm	(in)	±0.05	(±0.002)
Linearity	%		± 0.3	
Electrical Data				
Max. Current @ 1x230VAC	A_{pk} / A_{rms}		10.9 / 7.7	
Max. Current @ 3x400VAC	A_{pk} / A_{rms}		10.9 / 7.7	
Max. Cont. Current 1 [Passive cooling /Fan / Fluid]	A_{pk}		1.3 / 2 / 3.5	
Max. Cont. Current 2 [Passive cooling /Fan / Fluid]	A_{rms}		0.93 / 1.4 / 2.5	
Thermal Data				
Max. Winding Temperature (Sensor)	°C		90	
Thermal Resistance [Passive cooling / Fan / Fluid]	°K/W		2.6 / 1.1 / 0.36	
Thermal Time Constant [Passive cooling / Fan / Fluid]	s		2100 / 500 / 110	
Mechanical Data				
Slider Length	mm	(in)	490	(19)
Slider Mass	g	(lb)	2300	(5.06)

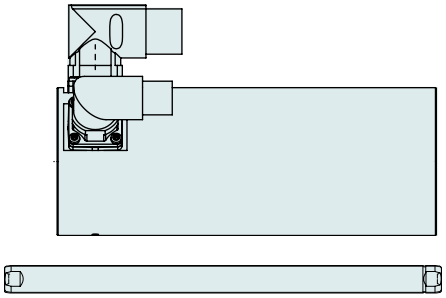

Item	Description	Item-No.
PS10-70x80U-BL-QJ	Stator 3x400VAC, LinMot Encoder	0150-1291
PS10-70x80U-BL-QJ-D01	Stator 3x400VAC, Sin/Cos Encoder 1Vpp, KTY	0150-2282
PS10-70x80U-BL-QJ-D02	Stator 3x400VAC, Sin/Cos Encoder 1Vpp, PTC	0150-2360
PS10-70x80U-BL-QJ-D03	Stator 3x400VAC, Sin/Cos 1Vpp, KTY on power connector	0150-2708
PL10-28x490/440	Slider for P10-70 'standard'	0150-2195

P10-70x80U/370-BL-QJ

Max. Stroke: 370 mm
Peak Force: 561 N

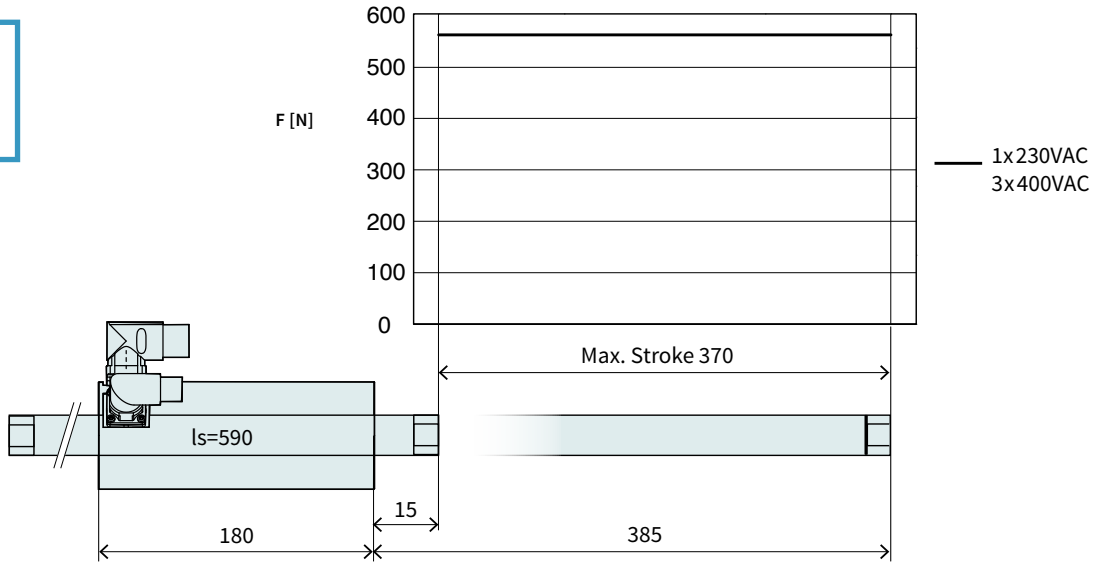

Dimensions in mm

Technical Data P10-70x80U/370				
Stroke				
Max. Stroke	mm	(in)	370	(14.59)
Force				
Max. Force @ 1x230VAC	N	(lbf)	561	(126)
Max. Force @ 3x400VAC	N	(lbf)	561	(126)
Max. Cont. Force [Passive cooling/ Fan / Fluid]	N	(lbf)	67 / 100 / 180	(15 / 23 / 41)
Max. Border Force relative	%		100	
Force Constant 1	N/A_{pk}	(lbf/A_{pk})	51	(11.5)
Force Constant 2	N/A_{rms}	(lbf/A_{rms})	72.1	(16.2)
Velocity				
Max. Velocity @ 1x230VAC	m/s	(in/s)	3.5	(139.9)
Max. Velocity @ 3x400VAC	m/s	(in/s)	6.1	(6.1)
Position Detection				
Repeatability	mm	(in)	±0.05	(±0.002)
Linearity	%		± 0.25	
Electrical Data				
Max. Current @ 1x230VAC	A_{pk} / A_{rms}		10.9 / 7.7	
Max. Current @ 3x400VAC	A_{pk} / A_{rms}		10.9 / 7.7	
Max. Cont. Current 1 [Passive cooling /Fan / Fluid]	A_{pk}		1.3 / 2 / 3.5	
Max. Cont. Current 2 [Passive cooling /Fan / Fluid]	A_{rms}		0.93 / 1.4 / 2.5	
Thermal Data				
Max. Winding Temperature (Sensor)	°C		90	
Thermal Resistance [Passive cooling / Fan / Fluid]	°K/W		2.6 / 1.1 / 0.36	
Thermal Time Constant [Passive cooling / Fan / Fluid]	s		2100 / 500 / 110	
Mechanical Data				
Slider Length	mm	(in)	590	(23)
Slider Mass	g	(lb)	2770	(6.09)

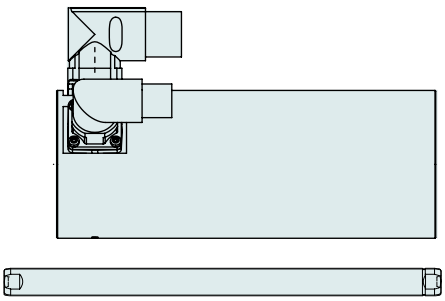

Item	Description	Item-No.
PS10-70x80U-BL-QJ	Stator 3x400VAC, LinMot Encoder	0150-1291
PS10-70x80U-BL-QJ-D01	Stator 3x400VAC, Sin/Cos Encoder 1Vpp, KTY	0150-2282
PS10-70x80U-BL-QJ-D02	Stator 3x400VAC, Sin/Cos Encoder 1Vpp, PTC	0150-2360
PS10-70x80U-BL-QJ-D03	Stator 3x400VAC, Sin/Cos 1Vpp, KTY on power connector	0150-2708
PL10-28x590/540	Slider for P10-70 'standard'	0150-2196

P10-70x80U/470-BL-QJ

Max. Stroke: 470 mm
Peak Force: 561 N

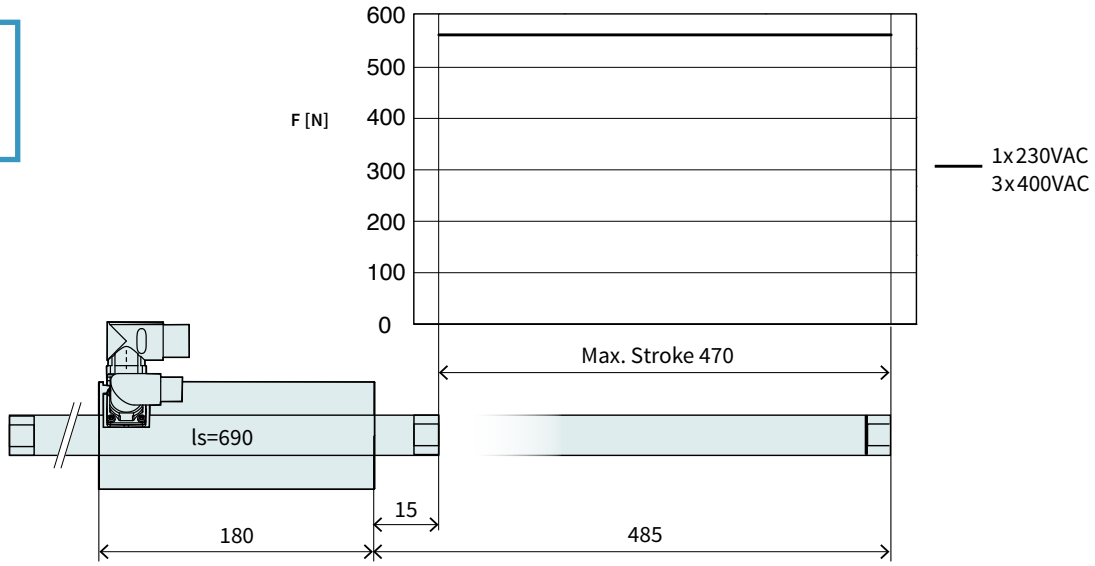

Dimensions in mm

Technical Data P10-70x80U/470				
Stroke				
Max. Stroke	mm	(in)	470	(18.49)
Force				
Max. Force @ 1x230VAC	N	(lbf)	561	(126)
Max. Force @ 3x400VAC	N	(lbf)	561	(126)
Max. Cont. Force [Passive cooling/ Fan / Fluid]	N	(lbf)	67 / 100 / 180	(15 / 23 / 41)
Max. Border Force relative	%		100	
Force Constant 1	N/A_{pk}	(lbf/A_{pk})	51	(11.5)
Force Constant 2	N/A_{rms}	(lbf/A_{rms})	72.1	(16.2)
Velocity				
Max. Velocity @ 1x230VAC	m/s	(in/s)	3.5	(139.9)
Max. Velocity @ 3x400VAC	m/s	(in/s)	6.1	(6.1)
Position Detection				
Repeatability	mm	(in)	±0.05	(±0.002)
Linearity	%		± 0.2	
Electrical Data				
Max. Current @ 1x230VAC	A_{pk} / A_{rms}		10.9 / 7.7	
Max. Current @ 3x400VAC	A_{pk} / A_{rms}		10.9 / 7.7	
Max. Cont. Current 1 [Passive cooling /Fan / Fluid]	A_{pk}		1.3 / 2 / 3.5	
Max. Cont. Current 2 [Passive cooling /Fan / Fluid]	A_{rms}		0.93 / 1.4 / 2.5	
Thermal Data				
Max. Winding Temperature (Sensor)	°C		90	
Thermal Resistance [Passive cooling / Fan / Fluid]	°K/W		2.6 / 1.1 / 0.36	
Thermal Time Constant [Passive cooling / Fan / Fluid]	s		2100 / 500 / 110	
Mechanical Data				
Slider Length	mm	(in)	690	(27)
Slider Mass	g	(lb)	3240	(7.13)

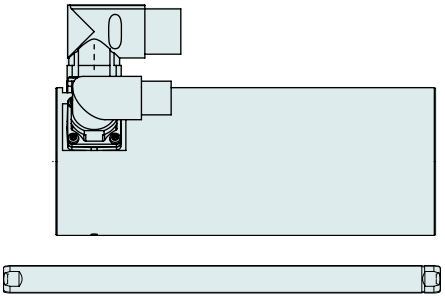

Item	Description	Item-No.
PS10-70x80U-BL-QJ	Stator 3x400VAC, LinMot Encoder	0150-1291
PS10-70x80U-BL-QJ-D01	Stator 3x400VAC, Sin/Cos Encoder 1Vpp, KTY	0150-2282
PS10-70x80U-BL-QJ-D02	Stator 3x400VAC, Sin/Cos Encoder 1Vpp, PTC	0150-2360
PS10-70x80U-BL-QJ-D03	Stator 3x400VAC, Sin/Cos 1Vpp, KTY on power connector	0150-2708
PL10-28x690/640	Slider for P10-70 'standard'	0150-2197

P10-70x80U/570-BL-QJ

Max. Stroke: 570 mm
Peak Force: 561 N

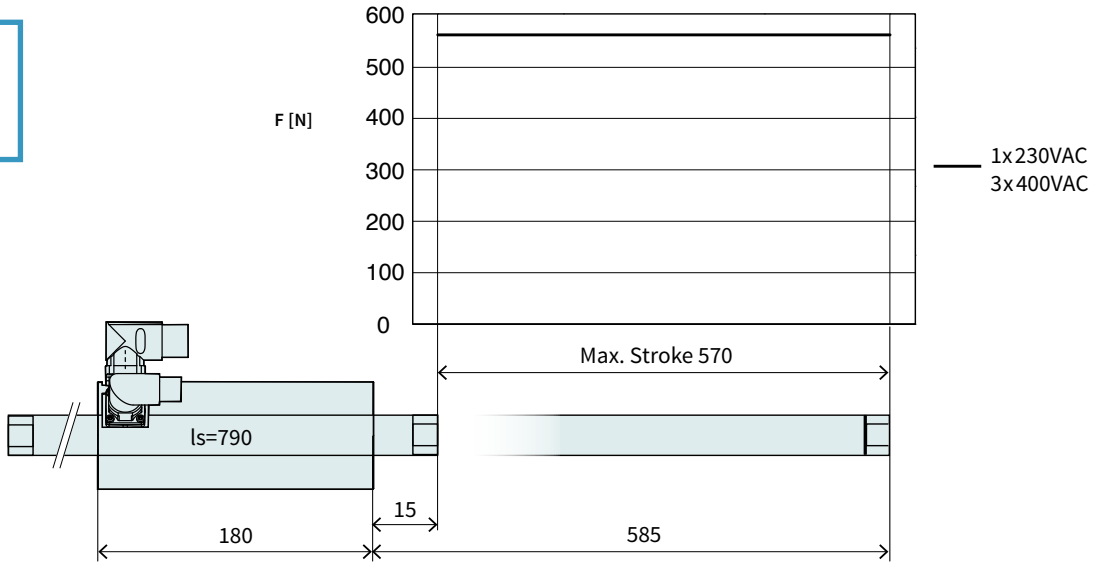

Dimensions in mm

Technical Data P10-70x80U/570				
Stroke				
Max. Stroke	mm	(in)	570	(22.39)
Force				
Max. Force @ 1x230VAC	N	(lbf)	561	(126)
Max. Force @ 3x400VAC	N	(lbf)	561	(126)
Max. Cont. Force [Passive cooling/ Fan / Fluid]	N	(lbf)	67 / 100 / 180	(15 / 23 / 41)
Max. Border Force relative	%		100	
Force Constant 1	N/A_{pk}	(lbf/A_{pk})	51	(11.5)
Force Constant 2	N/A_{rms}	(lbf/A_{rms})	72.1	(16.2)
Velocity				
Max. Velocity @ 1x230VAC	m/s	(in/s)	3.5	(139.9)
Max. Velocity @ 3x400VAC	m/s	(in/s)	6.1	(6.1)
Position Detection				
Repeatability	mm	(in)	±0.05	(±0.002)
Linearity	%		± 0.2	
Electrical Data				
Max. Current @ 1x230VAC	A_{pk} / A_{rms}		10.9 / 7.7	
Max. Current @ 3x400VAC	A_{pk} / A_{rms}		10.9 / 7.7	
Max. Cont. Current 1 [Passive cooling /Fan / Fluid]	A_{pk}		1.3 / 2 / 3.5	
Max. Cont. Current 2 [Passive cooling /Fan / Fluid]	A_{rms}		0.93 / 1.4 / 2.5	
Thermal Data				
Max. Winding Temperature (Sensor)	°C		90	
Thermal Resistance [Passive cooling / Fan / Fluid]	°K/W		2.6 / 1.1 / 0.36	
Thermal Time Constant [Passive cooling / Fan / Fluid]	s		2100 / 500 / 110	
Mechanical Data				
Slider Length	mm	(in)	790	(31)
Slider Mass	g	(lb)	3710	(8.16)

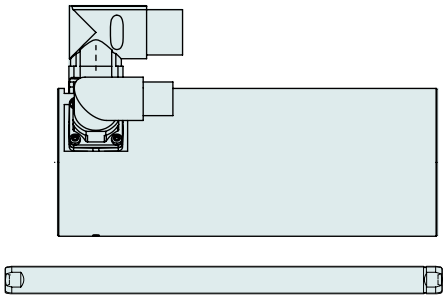

Item	Description	Item-No.
PS10-70x80U-BL-QJ	Stator 3x400VAC, LinMot Encoder	0150-1291
PS10-70x80U-BL-QJ-D01	Stator 3x400VAC, Sin/Cos Encoder 1Vpp, KTY	0150-2282
PS10-70x80U-BL-QJ-D02	Stator 3x400VAC, Sin/Cos Encoder 1Vpp, PTC	0150-2360
PS10-70x80U-BL-QJ-D03	Stator 3x400VAC, Sin/Cos 1Vpp, KTY on power connector	0150-2708
PL10-28x790/740	Slider for P10-70 'standard'	0150-2198

P10-70x80U/670-BL-QJ

Max. Stroke: 670 mm
Peak Force: 561 N

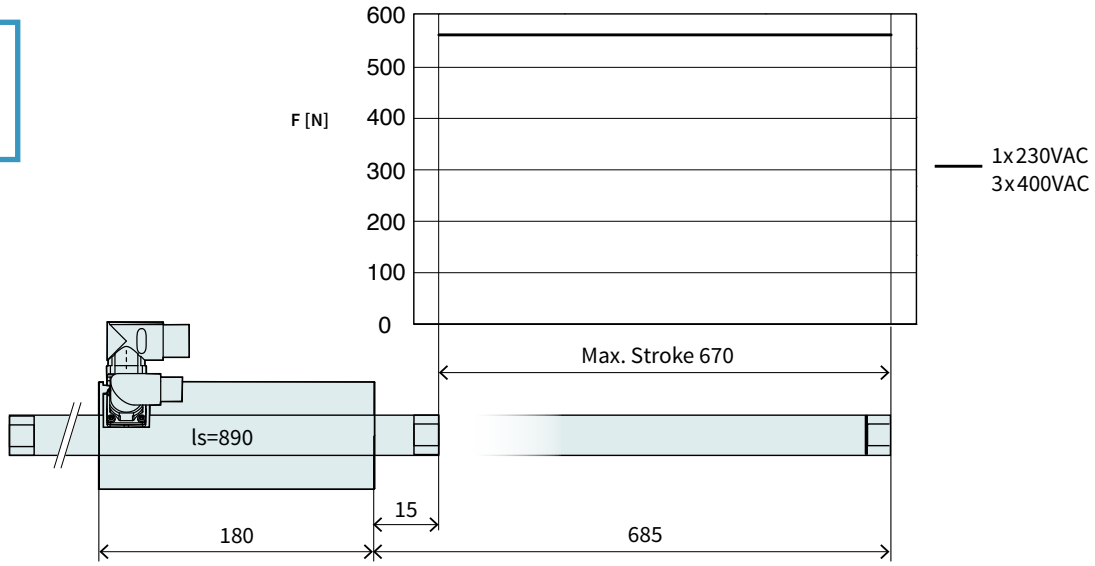

Dimensions in mm

Technical Data P10-70x80U/670				
Stroke				
Max. Stroke	mm	(in)	670	(26.39)
Force				
Max. Force @ 1x230VAC	N	(lbf)	561	(126)
Max. Force @ 3x400VAC	N	(lbf)	561	(126)
Max. Cont. Force [Passive cooling/ Fan / Fluid]	N	(lbf)	67 / 100 / 180	(15 / 23 / 41)
Max. Border Force relative	%		100	
Force Constant 1	N/A_{pk}	(lbf/A_{pk})	51	(11.5)
Force Constant 2	N/A_{rms}	(lbf/A_{rms})	72.1	(16.2)
Velocity				
Max. Velocity @ 1x230VAC	m/s	(in/s)	3.5	(139.9)
Max. Velocity @ 3x400VAC	m/s	(in/s)	6.1	(6.1)
Position Detection				
Repeatability	mm	(in)	±0.05	(±0.002)
Linearity	%		± 0.15	
Electrical Data				
Max. Current @ 1x230VAC	A_{pk} / A_{rms}		10.9 / 7.7	
Max. Current @ 3x400VAC	A_{pk} / A_{rms}		10.9 / 7.7	
Max. Cont. Current 1 [Passive cooling /Fan / Fluid]	A_{pk}		1.3 / 2 / 3.5	
Max. Cont. Current 2 [Passive cooling /Fan / Fluid]	A_{rms}		0.93 / 1.4 / 2.5	
Thermal Data				
Max. Winding Temperature (Sensor)	°C		90	
Thermal Resistance [Passive cooling / Fan / Fluid]	°K/W		2.6 / 1.1 / 0.36	
Thermal Time Constant [Passive cooling / Fan / Fluid]	s		2100 / 500 / 110	
Mechanical Data				
Slider Length	mm	(in)	890	(35)
Slider Mass	g	(lb)	4180	(9.2)

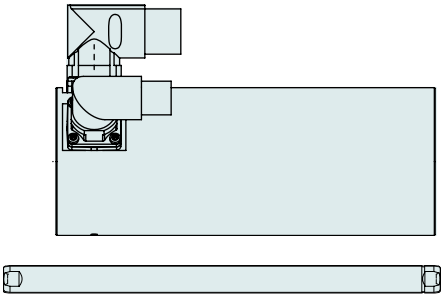

Item	Description	Item-No.
PS10-70x80U-BL-QJ	Stator 3x400VAC, LinMot Encoder	0150-1291
PS10-70x80U-BL-QJ-D01	Stator 3x400VAC, Sin/Cos Encoder 1Vpp, KTY	0150-2282
PS10-70x80U-BL-QJ-D02	Stator 3x400VAC, Sin/Cos Encoder 1Vpp, PTC	0150-2360
PS10-70x80U-BL-QJ-D03	Stator 3x400VAC, Sin/Cos 1Vpp, KTY on power connector	0150-2708
PL10-28x890/840	Slider for P10-70 'standard'	0150-2199

P10-70x80U/770-BL-QJ

Max. Stroke: 770 mm
Peak Force: 561 N

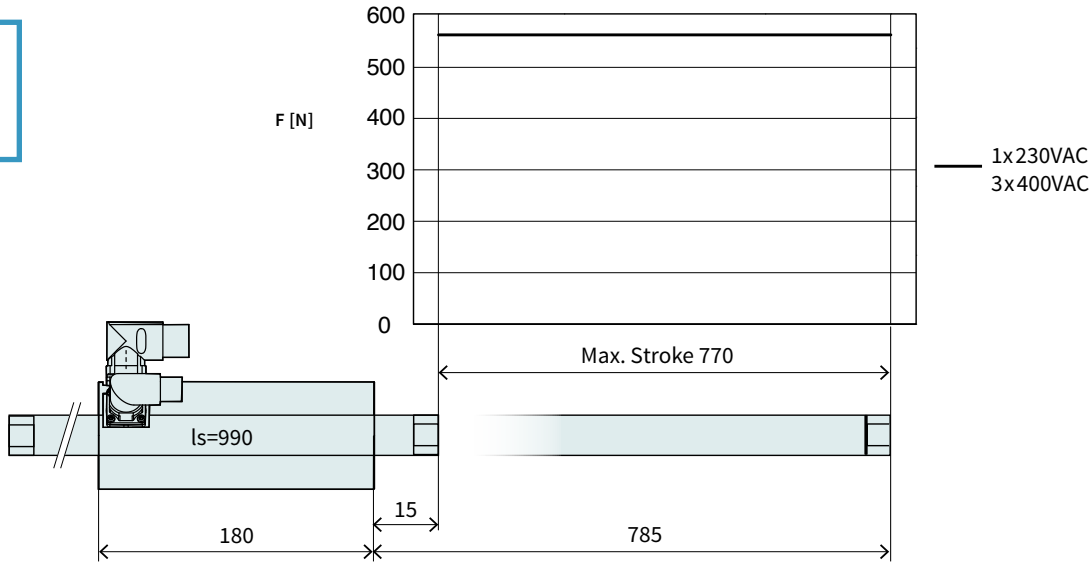

Dimensions in mm

Technical Data P10-70x80U/770				
Stroke				
Max. Stroke	mm	(in)	770	(30.3)
Force				
Max. Force @ 1x230VAC	N	(lbf)	561	(126)
Max. Force @ 3x400VAC	N	(lbf)	561	(126)
Max. Cont. Force [Passive cooling/ Fan / Fluid]	N	(lbf)	67 / 100 / 180	(15 / 23 / 41)
Max. Border Force relative	%		100	
Force Constant 1	N/A_{pk}	(lbf/A_{pk})	51	(11.5)
Force Constant 2	N/A_{rms}	(lbf/A_{rms})	72.1	(16.2)
Velocity				
Max. Velocity @ 1x230VAC	m/s	(in/s)	3.5	(139.9)
Max. Velocity @ 3x400VAC	m/s	(in/s)	6.1	(6.1)
Position Detection				
Repeatability	mm	(in)	±0.05	(±0.002)
Linearity	%		± 0.15	
Electrical Data				
Max. Current @ 1x230VAC	A_{pk} / A_{rms}		10.9 / 7.7	
Max. Current @ 3x400VAC	A_{pk} / A_{rms}		10.9 / 7.7	
Max. Cont. Current 1 [Passive cooling /Fan / Fluid]	A_{pk}		1.3 / 2 / 3.5	
Max. Cont. Current 2 [Passive cooling /Fan / Fluid]	A_{rms}		0.93 / 1.4 / 2.5	
Thermal Data				
Max. Winding Temperature (Sensor)	°C		90	
Thermal Resistance [Passive cooling / Fan / Fluid]	°K/W		2.6 / 1.1 / 0.36	
Thermal Time Constant [Passive cooling / Fan / Fluid]	s		2100 / 500 / 110	
Mechanical Data				
Slider Length	mm	(in)	990	(39)
Slider Mass	g	(lb)	4650	(10.23)

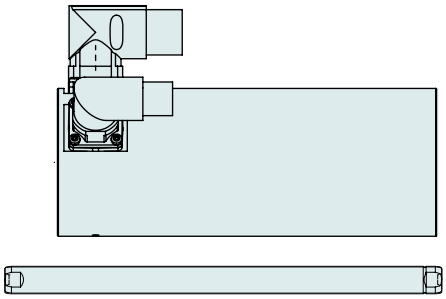

Item	Description	Item-No.
PS10-70x80U-BL-QJ	Stator 3x400VAC, LinMot Encoder	0150-1291
PS10-70x80U-BL-QJ-D01	Stator 3x400VAC, Sin/Cos Encoder 1Vpp, KTY	0150-2282
PS10-70x80U-BL-QJ-D02	Stator 3x400VAC, Sin/Cos Encoder 1Vpp, PTC	0150-2360
PS10-70x80U-BL-QJ-D03	Stator 3x400VAC, Sin/Cos 1Vpp, KTY on power connector	0150-2708
PL10-28x990/940	Slider for P10-70 'standard'	0150-2203

P10-70x80U/970-BL-QJ

Max. Stroke: 970 mm
Peak Force: 561 N

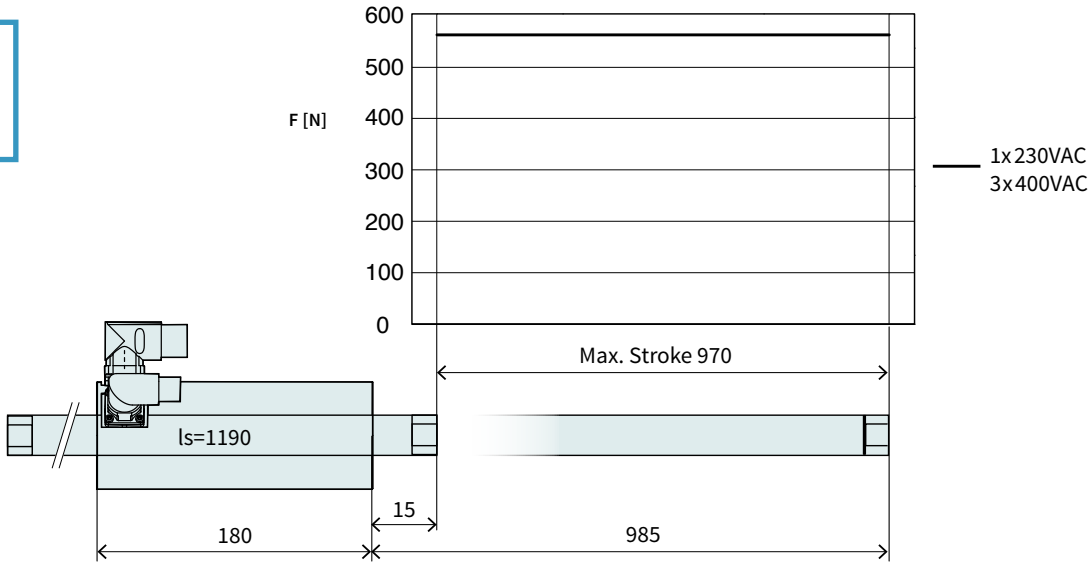

Dimensions in mm

Technical Data P10-70x80U/970				
Stroke				
Max. Stroke	mm	(in)	970	(38.2)
Force				
Max. Force @ 1x230VAC	N	(lbf)	561	(126)
Max. Force @ 3x400VAC	N	(lbf)	561	(126)
Max. Cont. Force [Passive cooling/ Fan / Fluid]	N	(lbf)	67 / 100 / 180	(15 / 23 / 41)
Max. Border Force relative	%		100	
Force Constant 1	N/A_{pk}	(lbf/A_{pk})	51	(11.5)
Force Constant 2	N/A_{rms}	(lbf/A_{rms})	72.1	(16.2)
Velocity				
Max. Velocity @ 1x230VAC	m/s	(in/s)	3.5	(139.9)
Max. Velocity @ 3x400VAC	m/s	(in/s)	6.1	(6.1)
Position Detection				
Repeatability	mm	(in)	±0.05	(±0.002)
Linearity	%		± 0.15	
Electrical Data				
Max. Current @ 1x230VAC	A_{pk} / A_{rms}		10.9 / 7.7	
Max. Current @ 3x400VAC	A_{pk} / A_{rms}		10.9 / 7.7	
Max. Cont. Current 1 [Passive cooling /Fan / Fluid]	A_{pk}		1.3 / 2 / 3.5	
Max. Cont. Current 2 [Passive cooling /Fan / Fluid]	A_{rms}		0.93 / 1.4 / 2.5	
Thermal Data				
Max. Winding Temperature (Sensor)	°C		90	
Thermal Resistance [Passive cooling / Fan / Fluid]	°K/W		2.6 / 1.1 / 0.36	
Thermal Time Constant [Passive cooling / Fan / Fluid]	s		2100 / 500 / 110	
Mechanical Data				
Slider Length	mm	(in)	1190	(47)
Slider Mass	g	(lb)	5590	(12.3)

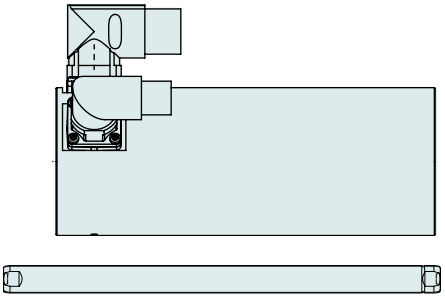

Item	Description	Item-No.
PS10-70x80U-BL-QJ	Stator 3x400VAC, LinMot Encoder	0150-1291
PS10-70x80U-BL-QJ-D01	Stator 3x400VAC, Sin/Cos Encoder 1Vpp, KTY	0150-2282
PS10-70x80U-BL-QJ-D02	Stator 3x400VAC, Sin/Cos Encoder 1Vpp, PTC	0150-2360
PS10-70x80U-BL-QJ-D03	Stator 3x400VAC, Sin/Cos 1Vpp, KTY on power connector	0150-2708
PL10-28x1190/1140	Slider for P10-70 'standard'	0150-2204

P10-70x80U/1170-BL-QJ

Max. Stroke: 1170 mm
Peak Force: 561 N

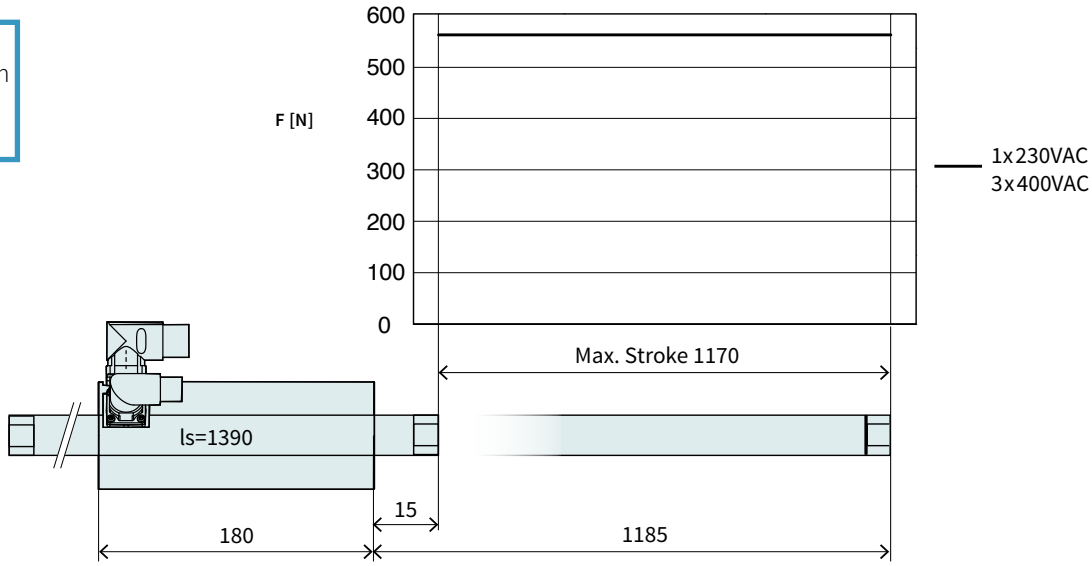

Dimensions in mm

Technical Data P10-70x80U/1170				
Stroke				
Max. Stroke	mm	(in)	1170	(46.1)
Force				
Max. Force @ 1x230VAC	N	(lbf)	561	(126)
Max. Force @ 3x400VAC	N	(lbf)	561	(126)
Max. Cont. Force [Passive cooling/ Fan / Fluid]	N	(lbf)	67 / 100 / 180	(15 / 23 / 41)
Max. Border Force relative	%		100	
Force Constant 1	N/A_{pk}	(lbf/A_{pk})	51	(11.5)
Force Constant 2	N/A_{rms}	(lbf/A_{rms})	72.1	(16.2)
Velocity				
Max. Velocity @ 1x230VAC	m/s	(in/s)	3.5	(139.9)
Max. Velocity @ 3x400VAC	m/s	(in/s)	6.1	(6.1)
Position Detection				
Repeatability	mm	(in)	±0.05	(±0.002)
Linearity	%		± 0.15	
Electrical Data				
Max. Current @ 1x230VAC	A_{pk} / A_{rms}		10.9 / 7.7	
Max. Current @ 3x400VAC	A_{pk} / A_{rms}		10.9 / 7.7	
Max. Cont. Current 1 [Passive cooling /Fan / Fluid]	A_{pk}		1.3 / 2 / 3.5	
Max. Cont. Current 2 [Passive cooling /Fan / Fluid]	A_{rms}		0.93 / 1.4 / 2.5	
Thermal Data				
Max. Winding Temperature (Sensor)	°C		90	
Thermal Resistance [Passive cooling / Fan / Fluid]	°K/W		2.6 / 1.1 / 0.36	
Thermal Time Constant [Passive cooling / Fan / Fluid]	s		2100 / 500 / 110	
Mechanical Data				
Slider Length	mm	(in)	1390	(55)
Slider Mass	g	(lb)	6530	(14.37)

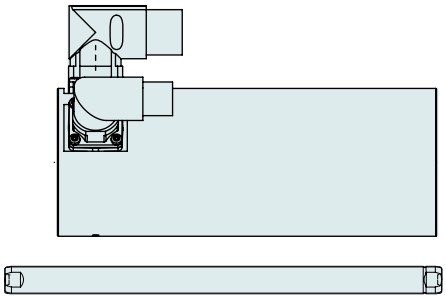

Item	Description	Item-No.
PS10-70x80U-BL-QJ	Stator 3x400VAC, LinMot Encoder	0150-1291
PS10-70x80U-BL-QJ-D01	Stator 3x400VAC, Sin/Cos Encoder 1Vpp, KTY	0150-2282
PS10-70x80U-BL-QJ-D02	Stator 3x400VAC, Sin/Cos Encoder 1Vpp, PTC	0150-2360
PS10-70x80U-BL-QJ-D03	Stator 3x400VAC, Sin/Cos 1Vpp, KTY on power connector	0150-2708
PL10-28x1390/1340	Slider for P10-70 'standard'	0150-2205

P10-70x80U/1370-BL-QJ

Max. Stroke: 1370 mm
Peak Force: 561 N

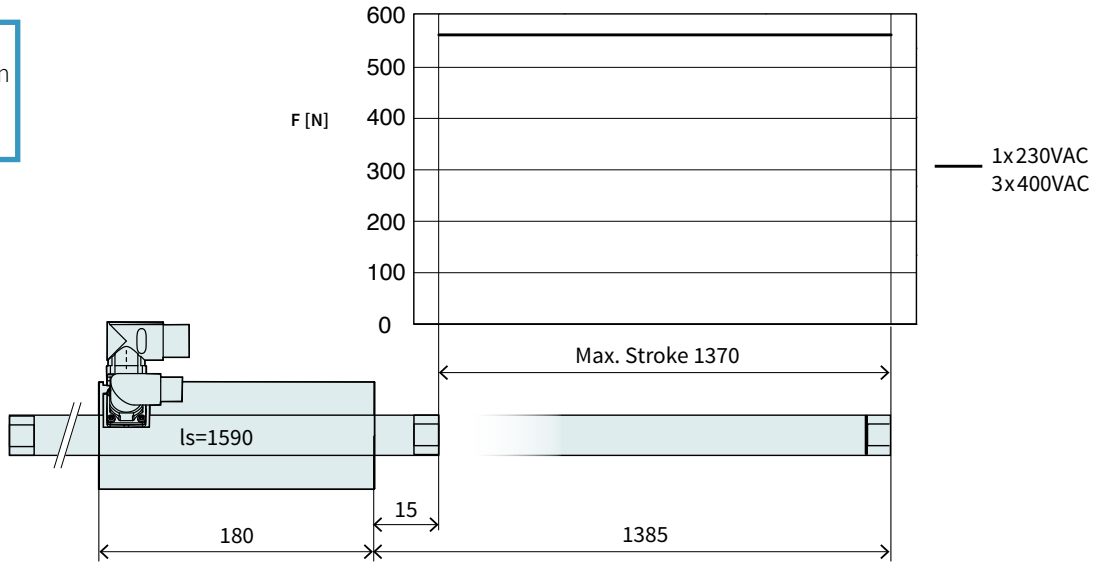

Dimensions in mm

Technical Data P10-70x80U/1370				
Stroke				
Max. Stroke	mm	(in)	1370	(53.89)
Force				
Max. Force @ 1x230VAC	N	(lbf)	561	(126)
Max. Force @ 3x400VAC	N	(lbf)	561	(126)
Max. Cont. Force [Passive cooling/ Fan / Fluid]	N	(lbf)	67 / 100 / 180	(15 / 23 / 41)
Max. Border Force relative	%		100	
Force Constant 1	N/A_{pk}	(lbf/A_{pk})	51	(11.5)
Force Constant 2	N/A_{rms}	(lbf/A_{rms})	72.1	(16.2)
Velocity				
Max. Velocity @ 1x230VAC	m/s	(in/s)	3.5	(139.9)
Max. Velocity @ 3x400VAC	m/s	(in/s)	6.1	(6.1)
Position Detection				
Repeatability	mm	(in)	±0.05	(±0.002)
Linearity	%		± 0.15	
Electrical Data				
Max. Current @ 1x230VAC	A_{pk} / A_{rms}		10.9 / 7.7	
Max. Current @ 3x400VAC	A_{pk} / A_{rms}		10.9 / 7.7	
Max. Cont. Current 1 [Passive cooling /Fan / Fluid]	A_{pk}		1.3 / 2 / 3.5	
Max. Cont. Current 2 [Passive cooling /Fan / Fluid]	A_{rms}		0.93 / 1.4 / 2.5	
Thermal Data				
Max. Winding Temperature (Sensor)	°C		90	
Thermal Resistance [Passive cooling / Fan / Fluid]	°K/W		2.6 / 1.1 / 0.36	
Thermal Time Constant [Passive cooling / Fan / Fluid]	s		2100 / 500 / 110	
Mechanical Data				
Slider Length	mm	(in)	1590	(63)
Slider Mass	g	(lb)	7470	(16.43)

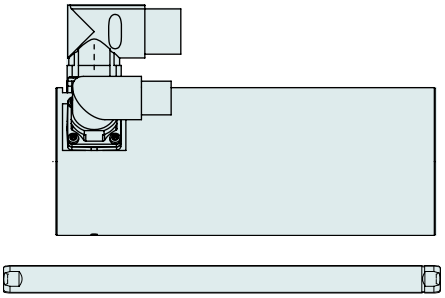

Item	Description	Item-No.
PS10-70x80U-BL-QJ	Stator 3x400VAC, LinMot Encoder	0150-1291
PS10-70x80U-BL-QJ-D01	Stator 3x400VAC, Sin/Cos Encoder 1Vpp, KTY	0150-2282
PS10-70x80U-BL-QJ-D02	Stator 3x400VAC, Sin/Cos Encoder 1Vpp, PTC	0150-2360
PS10-70x80U-BL-QJ-D03	Stator 3x400VAC, Sin/Cos 1Vpp, KTY on power connector	0150-2708
PL10-28x1590/1540	Slider for P10-70 'standard'	0150-2206

P10-70x80U/1570-BL-QJ

Max. Stroke: 1570 mm
Peak Force: 561 N

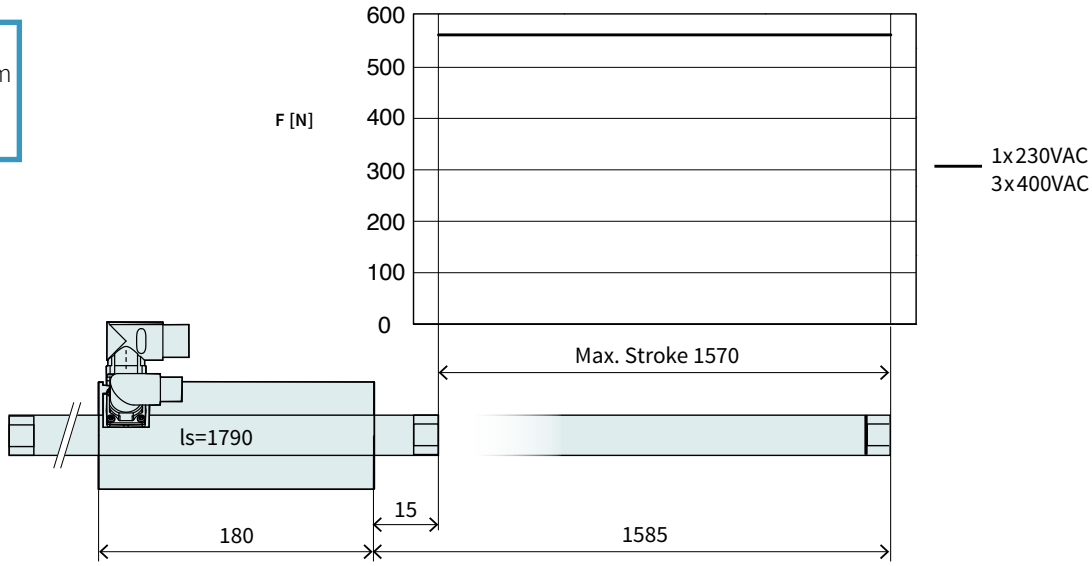

Dimensions in mm

Technical Data P10-70x80U/1570				
Stroke				
Max. Stroke	mm	(in)	1570	(61.79)
Force				
Max. Force @ 1x230VAC	N	(lbf)	561	(126)
Max. Force @ 3x400VAC	N	(lbf)	561	(126)
Max. Cont. Force [Passive cooling/ Fan / Fluid]	N	(lbf)	67 / 100 / 180	(15 / 23 / 41)
Max. Border Force relative	%		100	
Force Constant 1	N/A_{pk}	(lbf/A_{pk})	51	(11.5)
Force Constant 2	N/A_{rms}	(lbf/A_{rms})	72.1	(16.2)
Velocity				
Max. Velocity @ 1x230VAC	m/s	(in/s)	3.5	(139.9)
Max. Velocity @ 3x400VAC	m/s	(in/s)	6.1	(6.1)
Position Detection				
Repeatability	mm	(in)	±0.05	(±0.002)
Linearity	%		± 0.15	
Electrical Data				
Max. Current @ 1x230VAC	A_{pk} / A_{rms}		10.9 / 7.7	
Max. Current @ 3x400VAC	A_{pk} / A_{rms}		10.9 / 7.7	
Max. Cont. Current 1 [Passive cooling /Fan / Fluid]	A_{pk}		1.3 / 2 / 3.5	
Max. Cont. Current 2 [Passive cooling /Fan / Fluid]	A_{rms}		0.93 / 1.4 / 2.5	
Thermal Data				
Max. Winding Temperature (Sensor)	°C		90	
Thermal Resistance [Passive cooling / Fan / Fluid]	°K/W		2.6 / 1.1 / 0.36	
Thermal Time Constant [Passive cooling / Fan / Fluid]	s		2100 / 500 / 110	
Mechanical Data				
Slider Length	mm	(in)	1790	(70)
Slider Mass	g	(lb)	8413	(18.51)

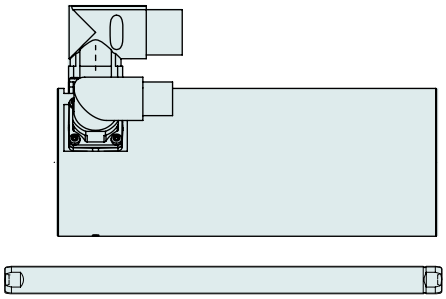

Item	Description	Item-No.
PS10-70x80U-BL-QJ	Stator 3x400VAC, LinMot Encoder	0150-1291
PS10-70x80U-BL-QJ-D01	Stator 3x400VAC, Sin/Cos Encoder 1Vpp, KTY	0150-2282
PS10-70x80U-BL-QJ-D02	Stator 3x400VAC, Sin/Cos Encoder 1Vpp, PTC	0150-2360
PS10-70x80U-BL-QJ-D03	Stator 3x400VAC, Sin/Cos 1Vpp, KTY on power connector	0150-2708
PL10-28x1790/1740	Slider for P10-70 'standard'	0150-2207

P10-70x80U/1770-BL-QJ

Max. Stroke: 1770 mm
Peak Force: 561 N

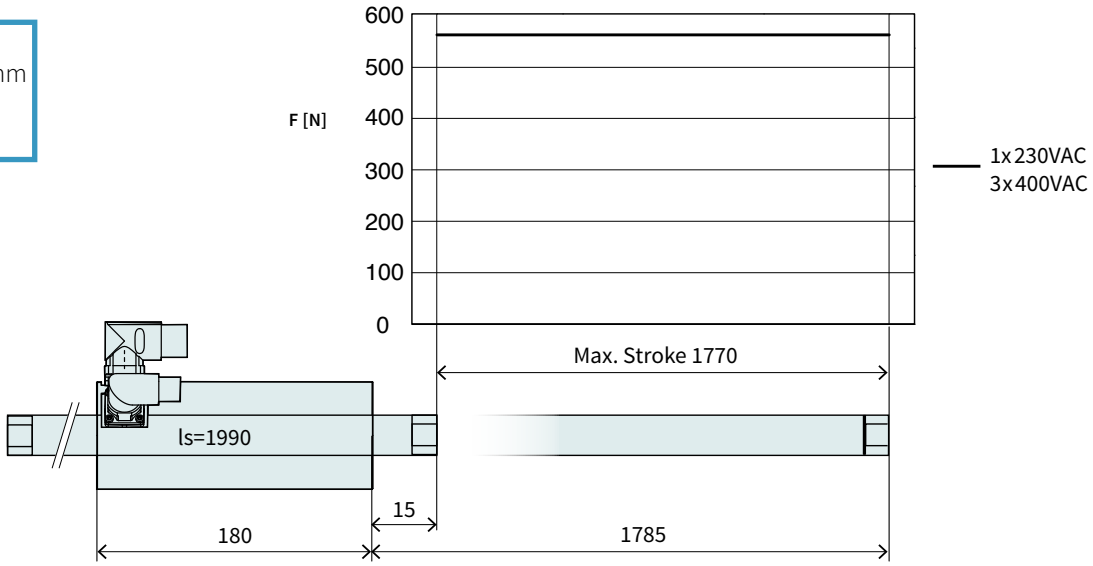

Dimensions in mm

Technical Data P10-70x80U/1770				
Stroke				
Max. Stroke	mm	(in)	1770	(69.7)
Force				
Max. Force @ 1x230VAC	N	(lbf)	561	(126)
Max. Force @ 3x400VAC	N	(lbf)	561	(126)
Max. Cont. Force [Passive cooling/ Fan / Fluid]	N	(lbf)	67 / 100 / 180	(15 / 23 / 41)
Max. Border Force relative	%		100	
Force Constant 1	N/A_{pk}	(lbf/A_{pk})	51	(11.5)
Force Constant 2	N/A_{rms}	(lbf/A_{rms})	72.1	(16.2)
Velocity				
Max. Velocity @ 1x230VAC	m/s	(in/s)	3.5	(139.9)
Max. Velocity @ 3x400VAC	m/s	(in/s)	6.1	(6.1)
Position Detection				
Repeatability	mm	(in)	±0.05	(±0.002)
Linearity	%		± 0.15	
Electrical Data				
Max. Current @ 1x230VAC	A_{pk} / A_{rms}		10.9 / 7.7	
Max. Current @ 3x400VAC	A_{pk} / A_{rms}		10.9 / 7.7	
Max. Cont. Current 1 [Passive cooling /Fan / Fluid]	A_{pk}		1.3 / 2 / 3.5	
Max. Cont. Current 2 [Passive cooling /Fan / Fluid]	A_{rms}		0.93 / 1.4 / 2.5	
Thermal Data				
Max. Winding Temperature (Sensor)	°C		90	
Thermal Resistance [Passive cooling / Fan / Fluid]	°K/W		2.6 / 1.1 / 0.36	
Thermal Time Constant [Passive cooling / Fan / Fluid]	s		2100 / 500 / 110	
Mechanical Data				
Slider Length	mm	(in)	1990	(78)
Slider Mass	g	(lb)	9350	(20.57)

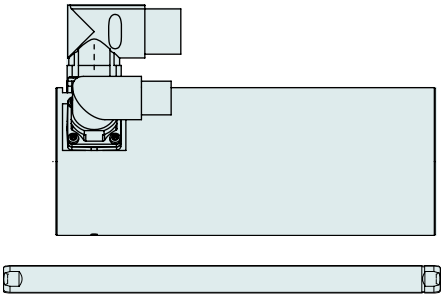

Item	Description	Item-No.
PS10-70x80U-BL-QJ	Stator 3x400VAC, LinMot Encoder	0150-1291
PS10-70x80U-BL-QJ-D01	Stator 3x400VAC, Sin/Cos Encoder 1Vpp, KTY	0150-2282
PS10-70x80U-BL-QJ-D02	Stator 3x400VAC, Sin/Cos Encoder 1Vpp, PTC	0150-2360
PS10-70x80U-BL-QJ-D03	Stator 3x400VAC, Sin/Cos 1Vpp, KTY on power connector	0150-2708
PL10-28x1990/1940	Slider for P10-70 'standard'	0150-2208

Linear Guides H10

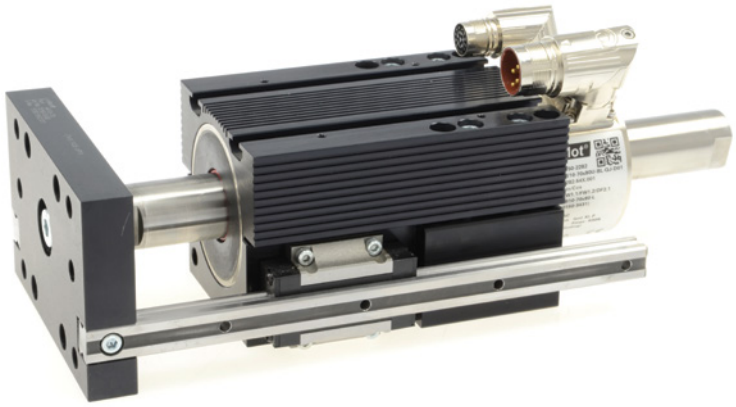

HM10-70x80/70	Linear Module 70x80 with 70 mm Stroke		
H-Guide	H10-70x80/70	H-Guide for P10-70x80, Stroke max. 70 mm	0150-5404
Stator	PS10-70x80U-BL-QJ	Stator 3x400VAC, LinMot Encoder	0150-1291
	PS10-70x80U-BL-QJ-D01	Stator 3x400VAC, Sin/Cos Encoder 1Vpp, KTY	0150-2282
	PS10-70x80U-BL-QJ-D02	Stator 3x400VAC, Sin/Cos Encoder 1Vpp, PTC	0150-2360
	PS10-70x80U-BL-QJ-D03	Stator 3x400VAC, Sin/Cos 1Vpp, KTY on power connector	0150-2708
Slider	PL10-28x290/240	Slider for P10-70 'standard'	0150-2193

HM10-70x80/170	Linear Module 70x80 with 170 mm Stroke		
H-Guide	H10-70x80/170	H-Guide for P10-70x80, Stroke max. 170 mm	0150-5405
Stator	PS10-70x80U-BL-QJ	Stator 3x400VAC, LinMot Encoder	0150-1291
	PS10-70x80U-BL-QJ-D01	Stator 3x400VAC, Sin/Cos Encoder 1Vpp, KTY	0150-2282
	PS10-70x80U-BL-QJ-D02	Stator 3x400VAC, Sin/Cos Encoder 1Vpp, PTC	0150-2360
	PS10-70x80U-BL-QJ-D03	Stator 3x400VAC, Sin/Cos 1Vpp, KTY on power connector	0150-2708
Slider	PL10-28x390/340	Slider for P10-70 'standard'	0150-2194

HM10-70x80/270	Linear Module 70x80 with 270 mm Stroke		
H-Guide	H10-70x80/270	H-Guide for P10-70x80, Stroke max. 270 mm	0150-5406
Stator	PS10-70x80U-BL-QJ	Stator 3x400VAC, LinMot Encoder	0150-1291
	PS10-70x80U-BL-QJ-D01	Stator 3x400VAC, Sin/Cos Encoder 1Vpp, KTY	0150-2282
	PS10-70x80U-BL-QJ-D02	Stator 3x400VAC, Sin/Cos Encoder 1Vpp, PTC	0150-2360
	PS10-70x80U-BL-QJ-D03	Stator 3x400VAC, Sin/Cos 1Vpp, KTY on power connector	0150-2708
Slider	PL10-28x590/540	Slider for P10-70 'standard'	0150-2196

FIND MORE PRODUCT DETAILS IN THE CHAPTER "LINEAR GUIDES".

4

HM10-70x80/370	Linear Module 70x80 with 370 mm Stroke		
H-Guide	H10-70x80/370	H-Guide for P10-70x80, Stroke max. 370 mm	0150-5407
Stator	PS10-70x80U-BL-QJ	Stator 3x400VAC, LinMot Encoder	0150-1291
	PS10-70x80U-BL-QJ-D01	Stator 3x400VAC, Sin/Cos Encoder 1Vpp, KTY	0150-2282
	PS10-70x80U-BL-QJ-D02	Stator 3x400VAC, Sin/Cos Encoder 1Vpp, PTC	0150-2360
	PS10-70x80U-BL-QJ-D03	Stator 3x400VAC, Sin/Cos 1Vpp, KTY on power connector	0150-2708
Slider	PL10-28x490/440	Slider for P10-70 'standard'	0150-2195

HM10-70x80/470	Linear Module 70x80 with 470 mm Stroke		
H-Guide	H10-70x80/470	H-Guide for P10-70x80, Stroke max. 470 mm	0150-5408
Stator	PS10-70x80U-BL-QJ	Stator 3x400VAC, LinMot Encoder	0150-1291
	PS10-70x80U-BL-QJ-D01	Stator 3x400VAC, Sin/Cos Encoder 1Vpp, KTY	0150-2282
	PS10-70x80U-BL-QJ-D02	Stator 3x400VAC, Sin/Cos Encoder 1Vpp, PTC	0150-2360
	PS10-70x80U-BL-QJ-D03	Stator 3x400VAC, Sin/Cos 1Vpp, KTY on power connector	0150-2708
Slider	PL10-28x690/640	Slider for P10-70 'standard'	0150-2196

Accessories			
Fan	HV01-37/48	Fan cooling for H01-37/48 &PF02-37/48	0150-5051

Motor Cable

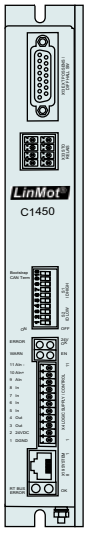

C1400

B Connector MC10-B/m

Q Connector MC10-Q/f

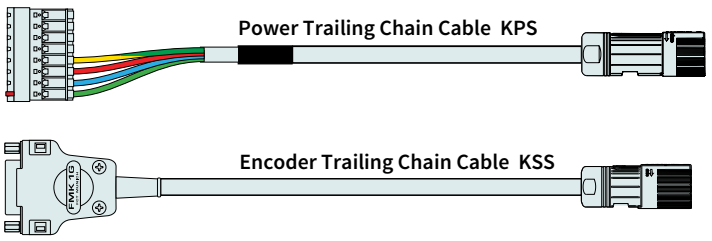

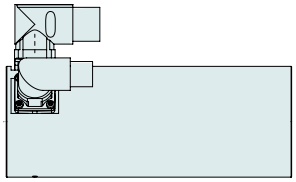

P10-70x80U

D15 Connector MC01-D15/f

J Connector MC10-J/f



E1400

L Connector MC10-L/m

Q Connector MC10-Q/f

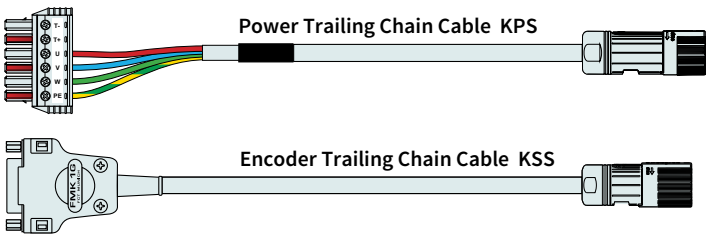

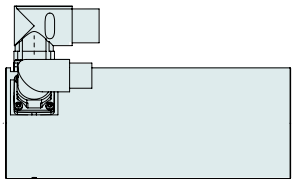

P10-70x80U

D15 Connector MC01-D15/f

J Connector MC10-J/f

ORDERING INFORMATION

TRAILING CHAIN CABLE FOR LINMOT DRIVES		
Item	**Description**	**Item-No.**
KPS15-04-L/Q-3	Power Trailing Chain Cable E1400/P10-70, 3 m	0150-2266
KPS15-04-L/Q-5	Power Trailing Chain Cable E1400/P10-70, 5 m	0150-2261
KPS15-04-L/Q-8	Power Trailing Chain Cable E1400/P10-70, 8 m	0150-2267
KPS15-04-L/Q-12	Power Trailing Chain Cable E1400/P10-70, 12 m	0150-2268
KPS15-04-L/Q-	Power Trailing Chain Cable L/Q-, Custom length	0150-3388
KPS15-04-B/Q-3	Power Trailing Chain Cable C1400/P10-70, 3 m	0150-3660
KPS15-04-B/Q-5	Power Trailing Chain Cable C1400/P10-70, 5 m	0150-3661
KPS15-04-B/Q-8	Power Trailing Chain Cable C1400/P10-70, 8 m	0150-3662
KPS15-04-B/Q-12	Power Trailing Chain Cable C1400/P10-70, 12 m	0150-3663
KPS15-04-B/Q-	Power Trailing Chain Cable B/Q-, Custom length	0150-3608

KSS 05-02/08-D15/J-3	Encoder Trailing Chain Cable D15/J, 3 m	0150-2263
KSS 05-02/08-D15/J-5	Encoder Trailing Chain Cable D15/J, 5 m	0150-2262
KSS 05-02/08-D15/J-8	Encoder Trailing Chain Cable D15/J, 8 m	0150-2264
KSS 05-02/08-D15/J-12	Encoder Trailing Chain Cable D15/J, 12 m	0150-2265
KSS 05-02/08-D15(f)-45°/J-	Encoder Trailing Chain Cable D15/J-, Custom length	0150-3389

TRAILING CHAIN CABLE FOR STATOR SERIES D01 / D02		
Item	**Description**	**Item-No.**
KPS15-04-..../Q-10	Power Trailing Chain Cable .../Q, 10 m for D0x	0150-2376
KPS15-04-./Q-	Power Trailing Chain Cable .../Q, for D0x, Custom length	0150-3491
KSS05-02/13-./J-10	Encoder Trailing Chain Cable ./J, 10 m for D0x	0150-2377
KSS05-02/13-./J-	Encoder Trailing Chain Cable ./J, for D0x, Custom length	0150-3492
KPS15-04	Power Trailing Chain Cable P10-70 (per m)	0150-2257
KSS05-02/13	Trailing Chain Cable Encoder P10-...-Dxx (per m)	0150-2259

TRAILING CHAIN CABLE FOR STATOR SERIES D03		
Item	**Description**	**Item-No.**
KPS15-04/04..../Q-10	Power Trailing Chain Cable .../Q, 10 m for D03	0150-3654
KPS15-04/04-./Q-	Power Trailing Chain Cable .../Q, for D03, Custom length	0150-3579
KSS05-02/06-./J-10	Encoder Trailing Chain Cable ./J, 10 m for D03	0150-3655
KSS05-02/06-./J-	Encoder Trailing Chain Cable ./J, for D03, Custom length	0150-3611
KPS15-04/04	Power Trailing Chain Cable P10-...-Dx3 (per m)	0150-2269
KSS05-02/06	Trailing Chain Cable Encoder P10-...-Dx3 (per m)	0150-2490

CONNECTOR		
Item	**Description**	**Item-No.**
MC10-L/m	Connector Power E1400/X2	0150-3382
MC01-D15/f	Motor Connector D15 (f)	0150-3136
MC10-Q/f	Connector Power PS10-70	0150-2268
MC10-J/f	Connector Encoder PS10-70	0150-2269

MOTOR FLANGES



Item	Description	Item-No.
PF10-70x110	Flange for PS10-70x80	0150-2272



Item	Description	Item-No.
PF10-70x110-FC	Flange for PS10-70x80 fluid cooling	0150-2291

FIND MORE PRODUCT DETAILS IN THE CHAPTER "ACCESSORIES".

FANS



Item	Description	Item-No.
HV01-37/48	Fan cooling for H01-37/48 &PF02-37/48	0150-5051

FIND MORE PRODUCT DETAILS IN THE CHAPTER "ACCESSORIES".

SLIDER MOUNTING





Item	Description	Item-No.
PLF01-28	Fixed Bearing Set for 27/28 mm sliders	0150-3087
PLF01-28-SS	Fixed Bearing Set for 27/28 mm sliders, stainless steel	0150-3297
PLL01-28	Floating Bearing for 28 mm sliders	0150-3094
PLM01-28-MK	Mounting Kit for 28 mm sliders	0150-3095

FIND MORE PRODUCT DETAILS IN THE CHAPTER "ACCESSORIES".

BEARING KIT

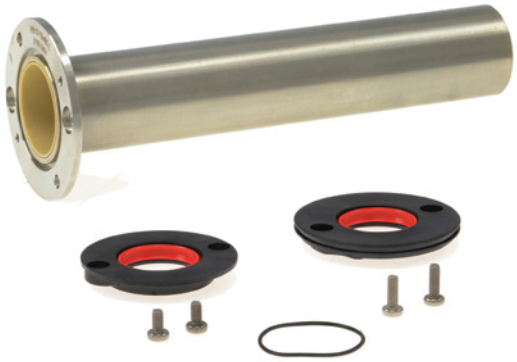

Item	Description	Item-No.
PB10-70x80-L	Bearing Kit for PS10-70x80	0150-3431

FIND MORE PRODUCT DETAILS IN THE CHAPTER "ACCESSORIES".

LUBRICANT RESERVOIR



Item	Description	Item-No.
PA10-70/28	Lubricant reservoir for PS10-70 with lubricating nipple	0150-3543

EXTERNAL POSITION SENSORS



Item	Description	Item-No.
MS01-1/D	Linear Encoder 1µm, A/B (for incremental strip)	0150-1840
MB01-1000	Magnetic incremental strip for MS01-1/D, per cm	0150-1963
KS025-D15/D-Encoder	Encoder Cable (Length in m)	0150-3168

FIND MORE PRODUCT DETAILS IN THE CHAPTER "ACCESSORIES".



Item	Description	Item-No.
MS01-1/D-SSI	Linear Encoder 1µm, A/B (for absolute strip)	0150-2095
MB01-1000-ABS	Magnetic absolute strip for MS01-1/D-SSI (per cm)	0150-2096
EC01-ABS/ENC-12-S	MS01-1/D-SSI Encoder connector straight	0150-3616
KSS01-12-D15/ABS-ENC	Special cable for MS01-1/D-SSI on C1100/C1200/C1400/E1200/E1400 Drives	0150-3652

FIND MORE PRODUCT DETAILS IN THE CHAPTER "ACCESSORIES".

LINEAR MOTORS P10-70x160U



- 3 x 400VAC Technology
- Peak forces up to 1120 N
- Extremely high dynamic
- Separate connector for sensor and power cable
- Can also be controlled by standard third-party servo drives

4

LINEAR MOTORS P10-70x160U

Technical Data ____ **519**

Motor Specifications

P10-70x160U/90 ..... **524**
P10-70x160U/190 ..... **525**
P10-70x160U/290 ..... **526**
P10-70x160U/390 ..... **527**
P10-70x160U/490 ..... **528**
P10-70x160U/590 ..... **529**
P10-70x160U/690 ..... **530**
P10-70x160U/890 ..... **531**
P10-70x160U/1090 ..... **532**
P10-70x160U/1290 ..... **533**
P10-70x160U/1490 ..... **534**
P10-70x160U/1690 ..... **535**

Linear Guides ____ **536**

Accessories ____ **538**



MOTOR FAMILY P10-70x160U

Technical Data				
Stroke				
Max. Stroke (ES)	mm	(in)	1690	(66.49)
Force				
Max. Force @ 1x230VAC	N	(lbf)	1120	(252)
Max. Force @ 3x400VAC	N	(lbf)	1120	(252)
Max. Cont. Force [Passive cooling/ Fan / Fluid]	N	(lbf)	130 / 200 / 350	(29 / 45 / 79)
Max. Border Force relative	%		100	
Force Constant 1	N/A_{pk}	(lbf/A_{pk})	56	(12.6)
Force Constant 2	N/A_{rms}	(lbf/A_{rms})	79.2	(17.8)
Velocity				
Max. Velocity @ 1x230VAC	m/s	(in/s)	3.2	(129.9)
Max. Velocity @ 3x400VAC	m/s	(in/s)	5.6	(219.9)
Position Detection				
Position Resolution	mm	(in)	0.005	(0.0002)
Repeatability	mm	(in)	±0.05	(±0.002)
Position Resolution with ES	mm	(in)	0.001	(0.00004)
Repeatability with ES	mm	(in)	±0.01	(±0.0004)
Linearity with ES	mm	(in)	±0.01	(±0.0004)
Electrical Data				
Max. Current @ 1x230VAC	A_{pk} / A_{rms}		19.9 / 14	
Max. Current @ 3x400VAC	A_{pk} / A_{rms}		19.9 / 14	
Max. Cont. Current 1 [Passive cooling /Fan / Fluid]	A_{pk}		2.3 / 3.6 / 6.3	
Max. Cont. Current 2 [Passive cooling /Fan / Fluid]	A_{rms}		1.7 / 2.5 / 4.4	
Back EMF Constant	V_{pk} / (m/s)	(V_{pk} / (in/s))	64.7	(1.64)
Terminal Resistance 25 °C / 120 °C	Ohm		8.3 / 11	
Terminal Inductivity	mH		16	
Magnetic Period	mm	(in)	40	(1.57)
Thermal Data				
Max. Winding Temperature (Sensor)	°C		90	
Thermal Resistance [Passive cooling / Fan / Fluid]	°K/W		1.3 / 0.56 / 0.18	
Thermal Time Constant [Passive cooling / Fan / Fluid]	s		2100 / 500 / 110	
Mechanical Data				
Stator Diameter	mm	(in)	70	(2.8)
Stator Length	mm	(in)	260	(10)
Stator Mass	g	(lb)	4200	(9.24)
Slider Diameter	mm	(in)	28	(1.1)
Slider Length	mm	(in)	390 - 1990	(15 - 78)
Slider Mass	g	(lb)	1830 - 9350	(4.03 - 20.57)
IP Code			IP 65	
Certification				
UL	File-No.		E354430	

STATOR

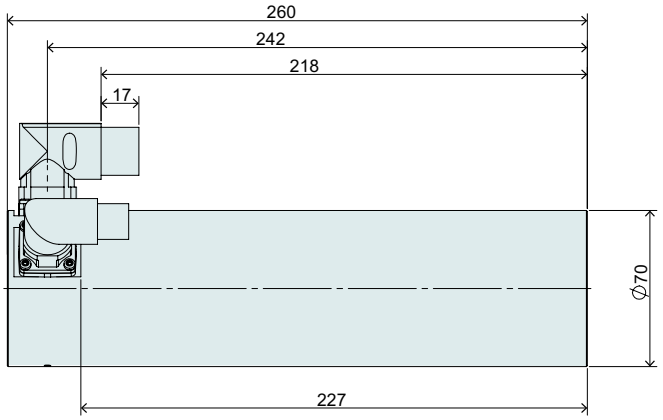

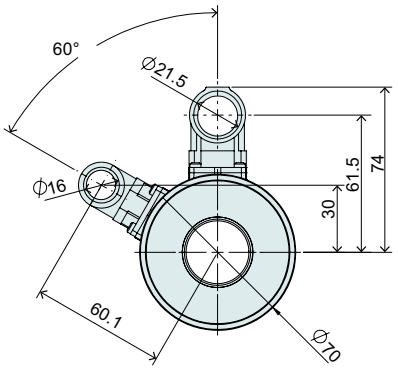

Item	Description	Item-No.
PS10-70x160U-BL-QJ	Stator 3x400VAC, LinMot Encoder	0150-1292
PS10-70x160U-BL-QJ-D01	Stator 3x400VAC, Sin/Cos Encoder 1Vpp, KTY	0150-2283
PS10-70x160U-BL-QJ-D02	Stator 3x400VAC, Sin/Cos Encoder 1Vpp, PTC	0150-2361
PS10-70x160U-BL-QJ-D03	Stator 3x400VAC, Sin/Cos 1Vpp, KTY on power connector	0150-2709

CONNECTOR PS10-70x160U-BL-QJ

Motor Connector Wiring		Connector Encoder J	Wire Color Motor Cable
+5 VDC	Supply	1	red
GND	Supply	2	black
Sense +5V	Supply Sense	3	white
Sense GND	Supply Sense	4	brown
Mot. Link C+	Communication	5	pink
Mot. Link C-	Communication	6	grey
Sin+	Encoder	7	yellow
Sin-	Encoder	8	orange
Cos+	Encoder	9	green
Cos-	Encoder	10	blue
n. c.	n. c.	11	n. c.
n. c.	n. c.	12	n. c.
n. c.	n. c.	13	n. c.
n. c.	n. c.	14	n. c.
n. c.	n. c.	15	n. c.
n. c.	n. c.	16	n. c.
n. c.	n. c.	17	n. c.

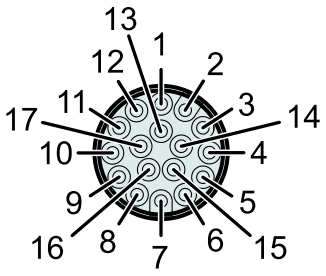

Connector Encoder J

View: Motor connector, plug side

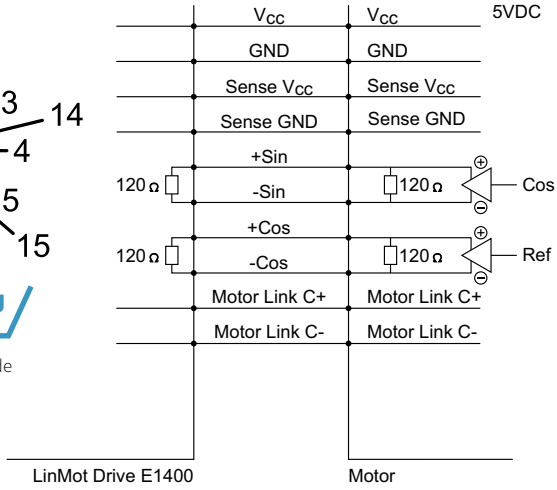

Motor Connector Wiring	Connector Power Q	Wire Color Motor Cable
Phase U	1	red
PE	2	yellow-green
Phase W	3	green
Phase V	4	blue
n. c.	A	n. c.
n. c.	B	n. c.
n. c.	C	n. c.
n. c.	D	n. c.

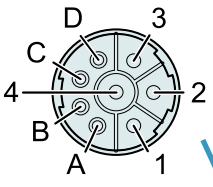

Connector Power Q

View: Motor connector, plug side

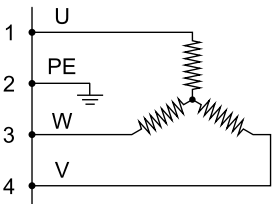

CONNECTOR PS10-70x160U-BL-QJ-D01/02

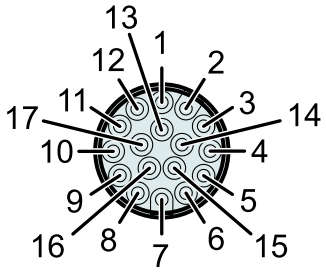

Connector Encoder J

View: Motor connector, plug side

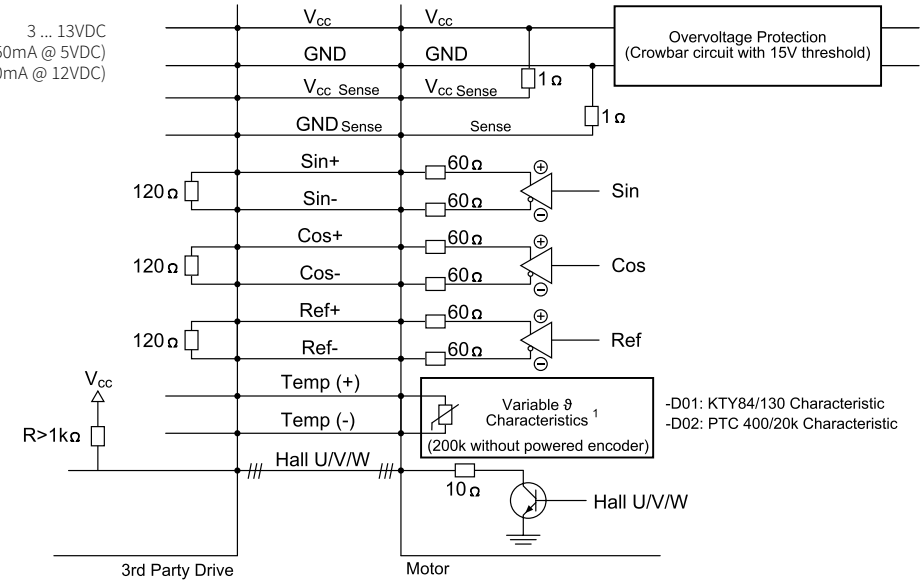

Motor Connector Wiring				
PS10-70x160U-BL-QJ-D01	PS10-70x160U-BL-QJ-D02	Function	Connector Encoder J	Wire Color Motor Cable
3 ... 13 VDC	3 ... 13 VDC	Supply	1	white
GND	GND	Supply	2	brown
Vcc Sense (optional)	Vcc Sense (optional)	Supply Sense	3	green
GND Sense (optional)	GND Sense (optional)	Supply Sense	4	yellow
Do not connect	Do not connect	–	5	–
Do not connect	Do not connect	–	6	–
Sin+	Sin+	Encoder 1 Vpp	7	grey
Sin-	Sin-	Encoder 1 Vpp	8	pink
Cos+	Cos+	Encoder 1 Vpp	9	blue
Cos-	Cos-	Encoder 1 Vpp	10	red
Ref+	Ref+	Encoder 1 Vpp	11	black
Ref-	Ref-	Encoder 1 Vpp	12	violett
Hall U	Hall U	Encoder (open collector)	13	grey-red
Hall V	Hall V	Encoder (open collector)	14	red-blue
Hall W	Hall W	Encoder (open collector)	15	white-green
Temp+ (KTY84/130 Char.)	Temp+ (PTC 400/20k Char.)	Temperature[1]	16	yellow-brown
Temp- (KTY84/130 Char.)	Temp- (PTC 400/20k Char.)	Temperature[1]	17	white-yellow

1) The temperature evaluation circiut must be powered from the encoder supply and must be at the same potential. The grounds of the temperature evaluation circuit and the encoder have to be connected. The encoder must have been powered on for at least 50 ms, before valid temperatures can be measured. If the encoder is powered off, 200k Ohms are measured between Pins 16 and 17. The maximum voltage between Pin 16 and 17 must not exceed 16 VDC. The maximum current must not exceed 15 mA.

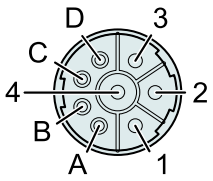

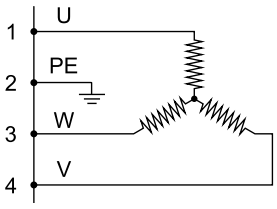

Connector Power Q

View: Motor connector, plug side

Motor Connector Wiring			
PS10-70x160U-BL-QJ-D01	PS10-70x160U-BL-QJ-D02	Connector Power Q	Wire Color Motor Cable
Phase U	Phase U	1	red
PE	PE	2	yel-low-green
Phase W	Phase W	3	green
Phase V	Phase V	4	blue
n. c.	n. c.	A	n. c.
n. c.	n. c.	B	n. c.
n. c.	n. c.	C	n. c.
n. c.	n. c.	D	n. c.

4

CONNECTOR PS10-70x160U-BL-QJ-D03

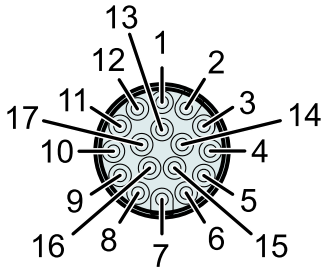

Connector Encoder J

View: Motor connector, plug side

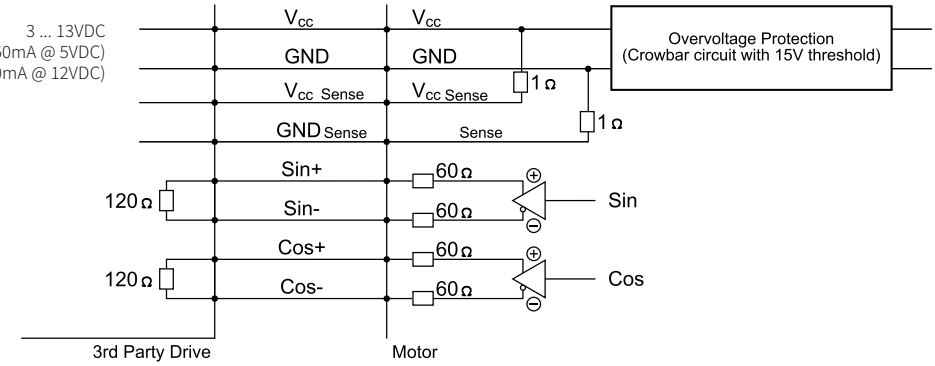

Motor Connector Wiring		Connector Encoder J	Wire Color Motor Cable
3 ... 13 VDC	Supply	1	red
GND	Supply	2	black
Vcc Sense (optional)	Supply Sense	3	white
GND Sense (optional)	Supply Sense	4	brown
Do not connect	–	5	–
Do not connect	–	6	–
Sin+	Encoder 1 Vpp	7	yellow
Sin-	Encoder 1 Vpp	8	orange
Cos+	Encoder 1 Vpp	9	green
Cos-	Encoder 1 Vpp	10	blue
n. c.	–	11	n. c.
n. c.	–	12	n. c.
n. c.	–	13	n. c.
Do not connect	–	14	n. c.
n. c.	–	15	n. c.
n. c.	–	16	n. c.
n. c.	–	17	n. c.

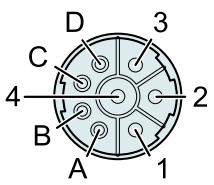

Connector Power Q

View: Motor connector, plug side

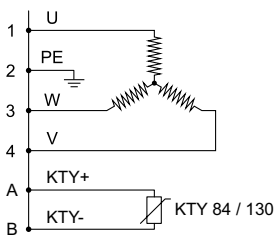

Motor Connector Wiring	Lesitungsstecker Q	Wire Color Motor Cable
Phase U	1	red (previously: black 1)
PE	2	yellow-green
Phase W	3	green (previously: black 3)
Phase V	4	blue (previously: black 2)
KTY +	A	purple (previously: black 5)
KTY -	B	grey (previously: black 6)
n. c.	C	yellow (previously: black 7)
n. c.	D	brown (previously: black 8)

SLIDER

Slider Standard

Number of grooves determines the slider type
(see chapter 2 / slider) and marks the front end.

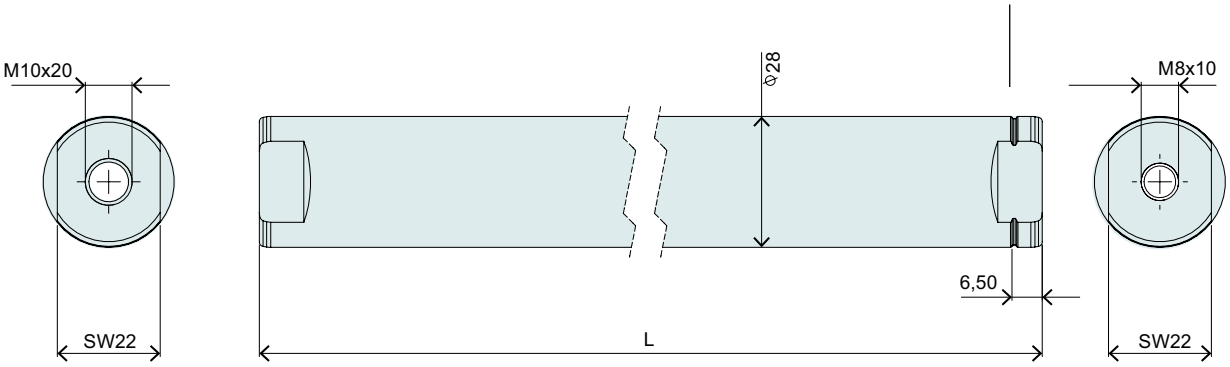

Slider Standard			
Item	Description	Max. Stroke [mm]	Item-No.
PL10-28x390/340	Slider for P10-70 'standard'	70	0150-2194
PL10-28x490/440	Slider for P10-70 'standard'	170	0150-2195
PL10-28x590/540	Slider for P10-70 'standard'	270	0150-2196
PL10-28x690/640	Slider for P10-70 'standard'	370	0150-2197
PL10-28x790/740	Slider for P10-70 'standard'	470	0150-2198
PL10-28x890/840	Slider for P10-70 'standard'	570	0150-2199
PL10-28x990/940	Slider for P10-70 'standard'	670	0150-2203
PL10-28x1190/1140	Slider for P10-70 'standard'	770	0150-2204
PL10-28x1390/1340	Slider for P10-70 'standard'	970	0150-2205
PL10-28x1590/1540	Slider for P10-70 'standard'	1170	0150-2206
PL10-28x1790/1740	Slider for P10-70 'standard'	1370	0150-2207
PL10-28x1990/1940	Slider for P10-70 'standard'	1570	0150-2208

P10-70x160U/90-BL-QJ

Max. Stroke: 90 mm
Peak Force: 1120 N

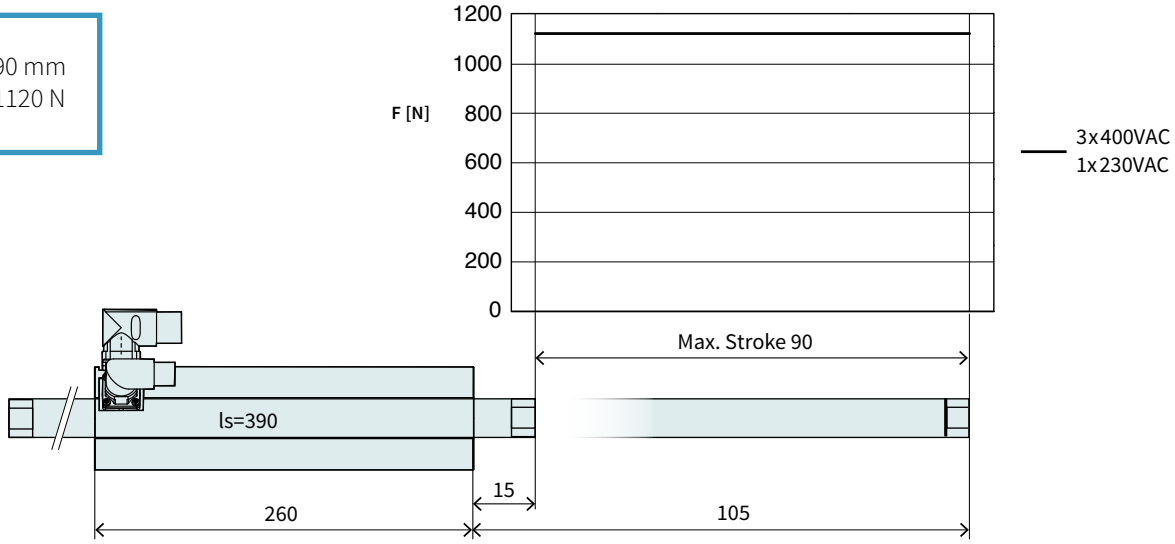

Dimensions in mm

Technical Data P10-70x160U/90				
Stroke				
Max. Stroke	mm	(in)	90	(3.53)
Force				
Max. Force @ 1x230VAC	N	(lbf)	1120	(252)
Max. Force @ 3x400VAC	N	(lbf)	1120	(252)
Max. Cont. Force [Passive cooling/ Fan / Fluid]	N	(lbf)	130 / 200 / 350	(29 / 45 / 79)
Max. Border Force relative	%		100	
Force Constant 1	N/A_{pk}	(lbf/A_{pk})	56	(12.6)
Force Constant 2	N/A_{rms}	(lbf/A_{rms})	79.2	(17.8)
Velocity				
Max. Velocity @ 1x230VAC	m/s	(in/s)	3.2	(129.9)
Max. Velocity @ 3x400VAC	m/s	(in/s)	5.6	(5.6)
Position Detection				
Repeatability	mm	(in)	±0.05	(±0.002)
Linearity	%		± 0.65	
Electrical Data				
Max. Current @ 1x230VAC	A_{pk} / A_{rms}		19.9 / 14	
Max. Current @ 3x400VAC	A_{pk} / A_{rms}		19.9 / 14	
Max. Cont. Current 1 [Passive cooling /Fan / Fluid]	A_{pk}		2.3 / 3.6 / 6.3	
Max. Cont. Current 2 [Passive cooling /Fan / Fluid]	A_{rms}		1.7 / 2.5 / 4.4	
Thermal Data				
Max. Winding Temperature (Sensor)	°C		90	
Thermal Resistance [Passive cooling / Fan / Fluid]	°K/W		1.3 / 0.56 / 0.18	
Thermal Time Constant [Passive cooling / Fan / Fluid]	s		2100 / 500 / 110	
Mechanical Data				
Slider Length	mm	(in)	390	(15)
Slider Mass	g	(lb)	1830	(4.03)



Item	Description	Item-No.
PS10-70x160U-BL-QJ	Stator 3x400VAC, LinMot Encoder	0150-1292
PS10-70x160U-BL-QJ-D01	Stator 3x400VAC, Sin/Cos Encoder 1Vpp, KTY	0150-2283
PS10-70x160U-BL-QJ-D02	Stator 3x400VAC, Sin/Cos Encoder 1Vpp, PTC	0150-2361
PS10-70x160U-BL-QJ-D03	Stator 3x400VAC, Sin/Cos 1Vpp, KTY on power connector	0150-2709
PL10-28x390/340	Slider for P10-70 'standard'	0150-2194

P10-70x160U/190-BL-QJ

Max. Stroke: 190 mm
Peak Force: 1120 N

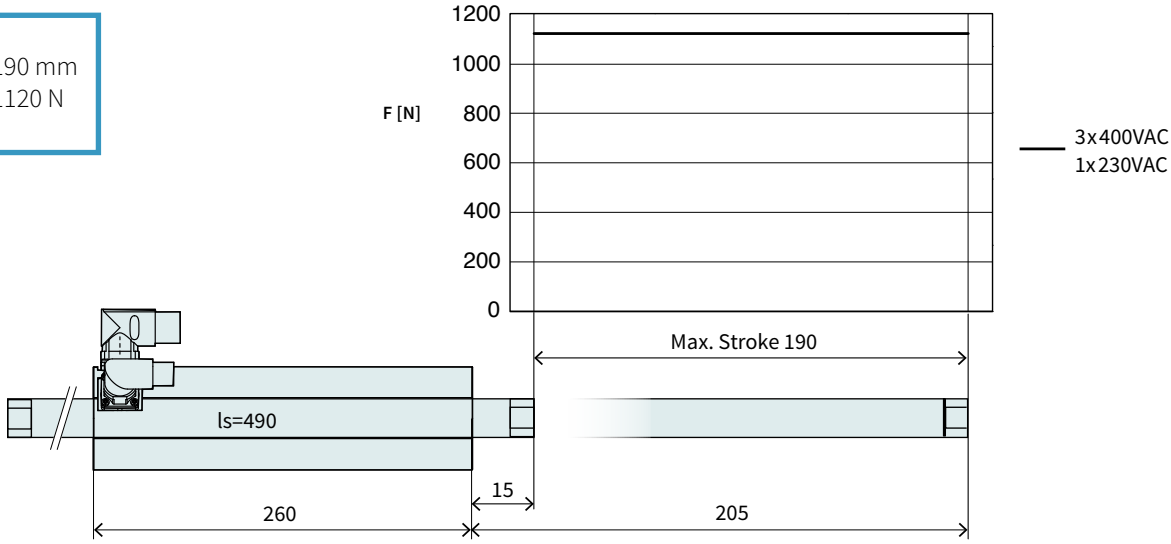

Dimensions in mm

Technical Data P10-70x160U/190				
Stroke				
Max. Stroke	mm	(in)	190	(7.48)
Force				
Max. Force @ 1x230VAC	N	(lbf)	1120	(252)
Max. Force @ 3x400VAC	N	(lbf)	1120	(252)
Max. Cont. Force [Passive cooling/ Fan / Fluid]	N	(lbf)	130 / 200 / 350	(29 / 45 / 79)
Max. Border Force relative	%		100	
Force Constant 1	N/A_{pk}	(lbf/A_{pk})	56	(12.6)
Force Constant 2	N/A_{rms}	(lbf/A_{rms})	79.2	(17.8)
Velocity				
Max. Velocity @ 1x230VAC	m/s	(in/s)	3.2	(129.9)
Max. Velocity @ 3x400VAC	m/s	(in/s)	5.6	(5.6)
Position Detection				
Repeatability	mm	(in)	±0.05	(±0.002)
Linearity	%		± 0.35	
Electrical Data				
Max. Current @ 1x230VAC	A_{pk} / A_{rms}		19.9 / 14	
Max. Current @ 3x400VAC	A_{pk} / A_{rms}		19.9 / 14	
Max. Cont. Current 1 [Passive cooling /Fan / Fluid]	A_{pk}		2.3 / 3.6 / 6.3	
Max. Cont. Current 2 [Passive cooling /Fan / Fluid]	A_{rms}		1.7 / 2.5 / 4.4	
Thermal Data				
Max. Winding Temperature (Sensor)	°C		90	
Thermal Resistance [Passive cooling / Fan / Fluid]	°K/W		1.3 / 0.56 / 0.18	
Thermal Time Constant [Passive cooling / Fan / Fluid]	s		2100 / 500 / 110	
Mechanical Data				
Slider Length	mm	(in)	490	(19)
Slider Mass	g	(lb)	2300	(5.06)

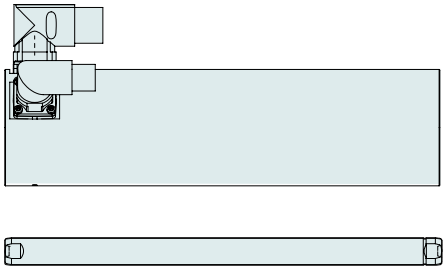

Item	Description	Item-No.
PS10-70x160U-BL-QJ	Stator 3x400VAC, LinMot Encoder	0150-1292
PS10-70x160U-BL-QJ-D01	Stator 3x400VAC, Sin/Cos Encoder 1Vpp, KTY	0150-2283
PS10-70x160U-BL-QJ-D02	Stator 3x400VAC, Sin/Cos Encoder 1Vpp, PTC	0150-2361
PS10-70x160U-BL-QJ-D03	Stator 3x400VAC, Sin/Cos 1Vpp, KTY on power connector	0150-2709
PL10-28x490/440	Slider for P10-70 'standard'	0150-2195

P10-70x160U/290-BL-QJ

Max. Stroke: 290 mm
Peak Force: 1120 N

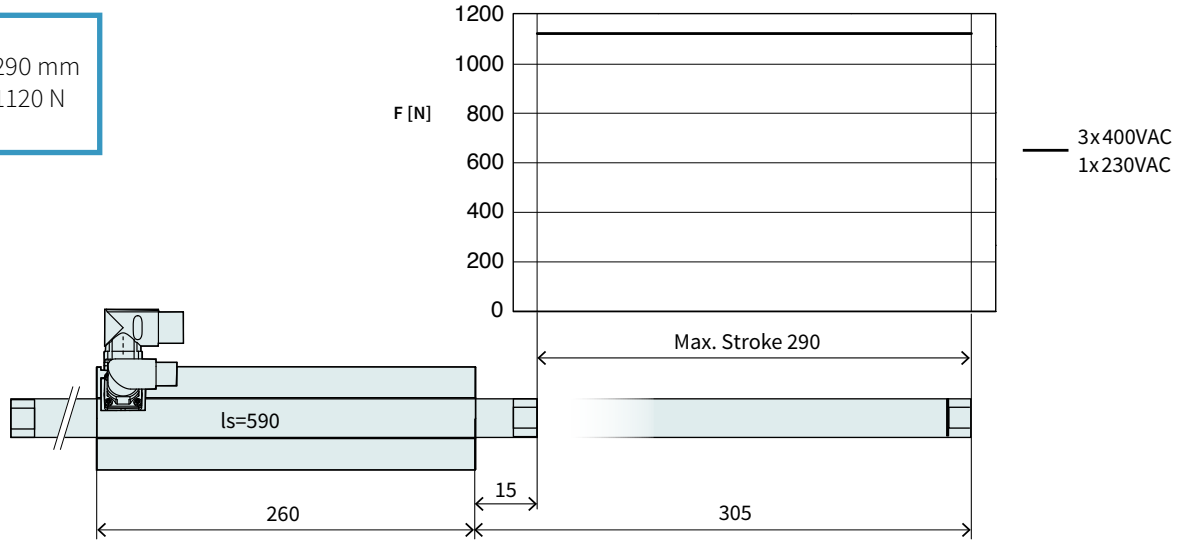

Dimensions in mm

Technical Data P10-70x160U/290				
Stroke				
Max. Stroke	mm	(in)	290	(11.4)
Force				
Max. Force @ 1x230VAC	N	(lbf)	1120	(252)
Max. Force @ 3x400VAC	N	(lbf)	1120	(252)
Max. Cont. Force [Passive cooling/ Fan / Fluid]	N	(lbf)	130 / 200 / 350	(29 / 45 / 79)
Max. Border Force relative	%		100	
Force Constant 1	N/A_{pk}	(lbf/A_{pk})	56	(12.6)
Force Constant 2	N/A_{rms}	(lbf/A_{rms})	79.2	(17.8)
Velocity				
Max. Velocity @ 1x230VAC	m/s	(in/s)	3.2	(129.9)
Max. Velocity @ 3x400VAC	m/s	(in/s)	5.6	(5.6)
Position Detection				
Repeatability	mm	(in)	±0.05	(±0.002)
Linearity	%		± 0.25	
Electrical Data				
Max. Current @ 1x230VAC	A_{pk} / A_{rms}		19.9 / 14	
Max. Current @ 3x400VAC	A_{pk} / A_{rms}		19.9 / 14	
Max. Cont. Current 1 [Passive cooling /Fan / Fluid]	A_{pk}		2.3 / 3.6 / 6.3	
Max. Cont. Current 2 [Passive cooling /Fan / Fluid]	A_{rms}		1.7 / 2.5 / 4.4	
Thermal Data				
Max. Winding Temperature (Sensor)	°C		90	
Thermal Resistance [Passive cooling / Fan / Fluid]	°K/W		1.3 / 0.56 / 0.18	
Thermal Time Constant [Passive cooling / Fan / Fluid]	s		2100 / 500 / 110	
Mechanical Data				
Slider Length	mm	(in)	590	(23)
Slider Mass	g	(lb)	2770	(6.09)



Item	Description	Item-No.
PS10-70x160U-BL-QJ	Stator 3x400VAC, LinMot Encoder	0150-1292
PS10-70x160U-BL-QJ-D01	Stator 3x400VAC, Sin/Cos Encoder 1Vpp, KTY	0150-2283
PS10-70x160U-BL-QJ-D02	Stator 3x400VAC, Sin/Cos Encoder 1Vpp, PTC	0150-2361
PS10-70x160U-BL-QJ-D03	Stator 3x400VAC, Sin/Cos 1Vpp, KTY on power connector	0150-2709
PL10-28x590/540	Slider for P10-70 'standard'	0150-2196

P10-70x160U/390-BL-QJ

Max. Stroke: 390 mm
Peak Force: 1120 N

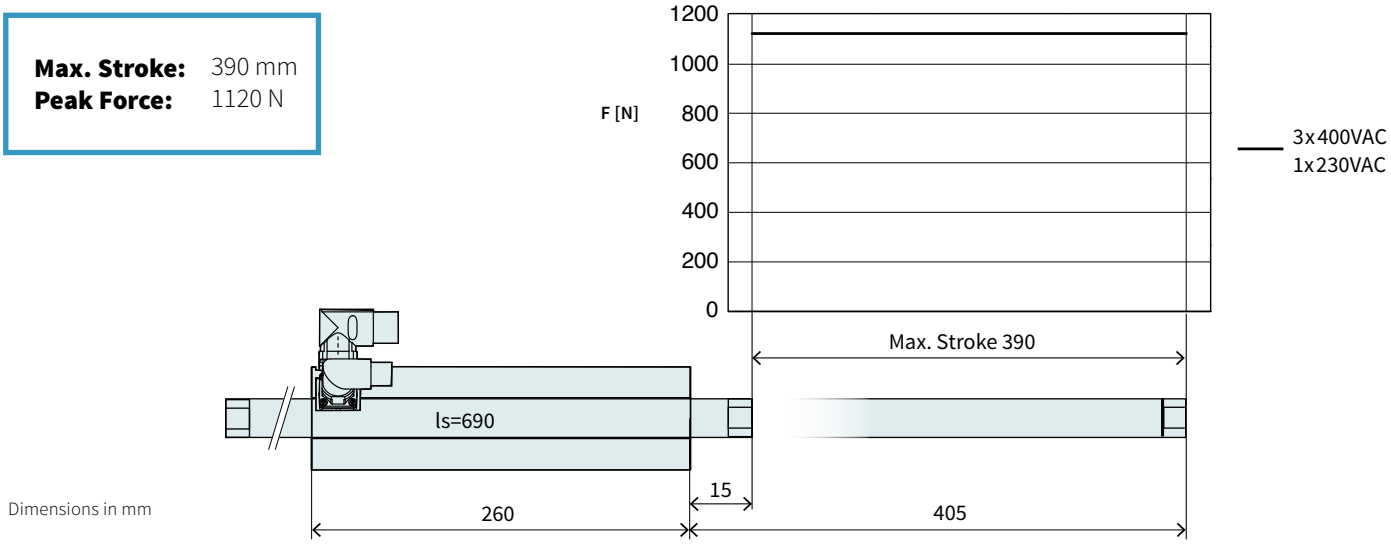

Dimensions in mm

Technical Data P10-70x160U/390				
Stroke				
Max. Stroke	mm	(in)	390	(15.4)
Force				
Max. Force @ 1x230VAC	N	(lbf)	1120	(252)
Max. Force @ 3x400VAC	N	(lbf)	1120	(252)
Max. Cont. Force [Passive cooling/ Fan / Fluid]	N	(lbf)	130 / 200 / 350	(29 / 45 / 79)
Max. Border Force relative	%		100	
Force Constant 1	N/A_{pk}	(lbf/A_{pk})	56	(12.6)
Force Constant 2	N/A_{rms}	(lbf/A_{rms})	79.2	(17.8)
Velocity				
Max. Velocity @ 1x230VAC	m/s	(in/s)	3.2	(129.9)
Max. Velocity @ 3x400VAC	m/s	(in/s)	5.6	(5.6)
Position Detection				
Repeatability	mm	(in)	±0.05	(±0.002)
Linearity	%		± 0.25	
Electrical Data				
Max. Current @ 1x230VAC	A_{pk} / A_{rms}		19.9 / 14	
Max. Current @ 3x400VAC	A_{pk} / A_{rms}		19.9 / 14	
Max. Cont. Current 1 [Passive cooling /Fan / Fluid]	A_{pk}		2.3 / 3.6 / 6.3	
Max. Cont. Current 2 [Passive cooling /Fan / Fluid]	A_{rms}		1.7 / 2.5 / 4.4	
Thermal Data				
Max. Winding Temperature (Sensor)	°C		90	
Thermal Resistance [Passive cooling / Fan / Fluid]	°K/W		1.3 / 0.56 / 0.18	
Thermal Time Constant [Passive cooling / Fan / Fluid]	s		2100 / 500 / 110	
Mechanical Data				
Slider Length	mm	(in)	690	(27)
Slider Mass	g	(lb)	3240	(7.13)

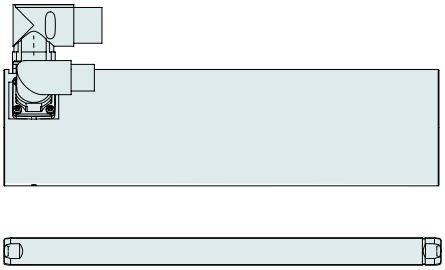

Item	Description	Item-No.
PS10-70x160U-BL-QJ	Stator 3x400VAC, LinMot Encoder	0150-1292
PS10-70x160U-BL-QJ-D01	Stator 3x400VAC, Sin/Cos Encoder 1Vpp, KTY	0150-2283
PS10-70x160U-BL-QJ-D02	Stator 3x400VAC, Sin/Cos Encoder 1Vpp, PTC	0150-2361
PS10-70x160U-BL-QJ-D03	Stator 3x400VAC, Sin/Cos 1Vpp, KTY on power connector	0150-2709
PL10-28x690/640	Slider for P10-70 'standard'	0150-2197

P10-70x160U/490-BL-QJ

Max. Stroke: 490 mm
Peak Force: 1120 N

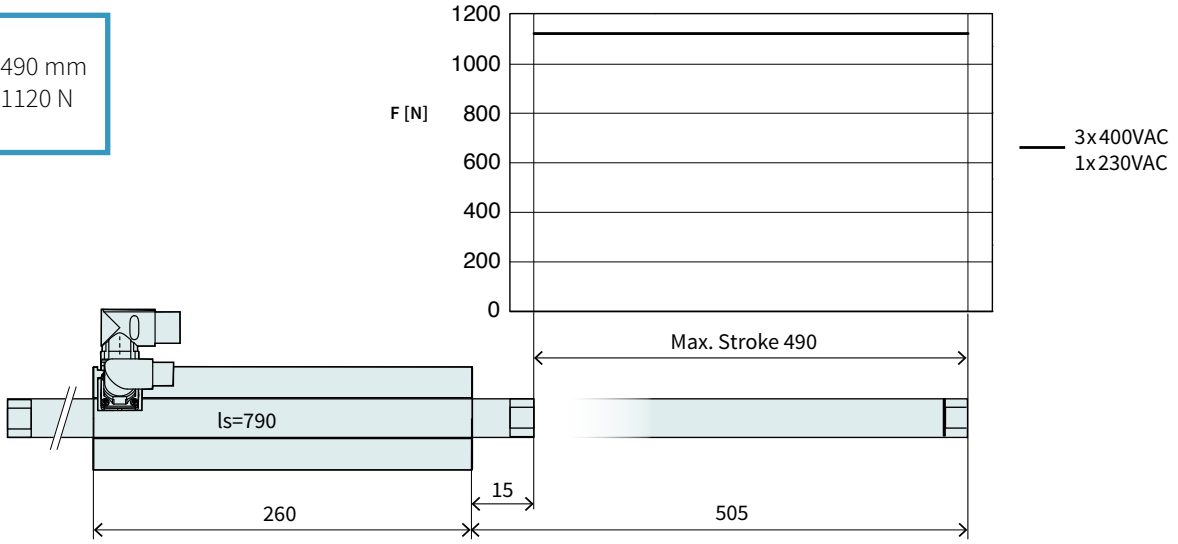

Dimensions in mm

Technical Data P10-70x160U/490				
Stroke				
Max. Stroke	mm	(in)	490	(19.3)
Force				
Max. Force @ 1x230VAC	N	(lbf)	1120	(252)
Max. Force @ 3x400VAC	N	(lbf)	1120	(252)
Max. Cont. Force [Passive cooling/ Fan / Fluid]	N	(lbf)	130 / 200 / 350	(29 / 45 / 79)
Max. Border Force relative	%		100	
Force Constant 1	N/A_{pk}	(lbf/A_{pk})	56	(12.6)
Force Constant 2	N/A_{rms}	(lbf/A_{rms})	79.2	(17.8)
Velocity				
Max. Velocity @ 1x230VAC	m/s	(in/s)	3.2	(129.9)
Max. Velocity @ 3x400VAC	m/s	(in/s)	5.6	(5.6)
Position Detection				
Repeatability	mm	(in)	±0.05	(±0.002)
Linearity	%		± 0.2	
Electrical Data				
Max. Current @ 1x230VAC	A_{pk} / A_{rms}		19.9 / 14	
Max. Current @ 3x400VAC	A_{pk} / A_{rms}		19.9 / 14	
Max. Cont. Current 1 [Passive cooling /Fan / Fluid]	A_{pk}		2.3 / 3.6 / 6.3	
Max. Cont. Current 2 [Passive cooling /Fan / Fluid]	A_{rms}		1.7 / 2.5 / 4.4	
Thermal Data				
Max. Winding Temperature (Sensor)	°C		90	
Thermal Resistance [Passive cooling / Fan / Fluid]	°K/W		1.3 / 0.56 / 0.18	
Thermal Time Constant [Passive cooling / Fan / Fluid]	s		2100 / 500 / 110	
Mechanical Data				
Slider Length	mm	(in)	790	(31)
Slider Mass	g	(lb)	3710	(8.16)



Item	Description	Item-No.
PS10-70x160U-BL-QJ	Stator 3x400VAC, LinMot Encoder	0150-1292
PS10-70x160U-BL-QJ-D01	Stator 3x400VAC, Sin/Cos Encoder 1Vpp, KTY	0150-2283
PS10-70x160U-BL-QJ-D02	Stator 3x400VAC, Sin/Cos Encoder 1Vpp, PTC	0150-2361
PS10-70x160U-BL-QJ-D03	Stator 3x400VAC, Sin/Cos 1Vpp, KTY on power connector	0150-2709
PL10-28x790/740	Slider for P10-70 'standard'	0150-2198

P10-70x160U/590-BL-QJ

Max. Stroke: 590 mm
Peak Force: 1120 N

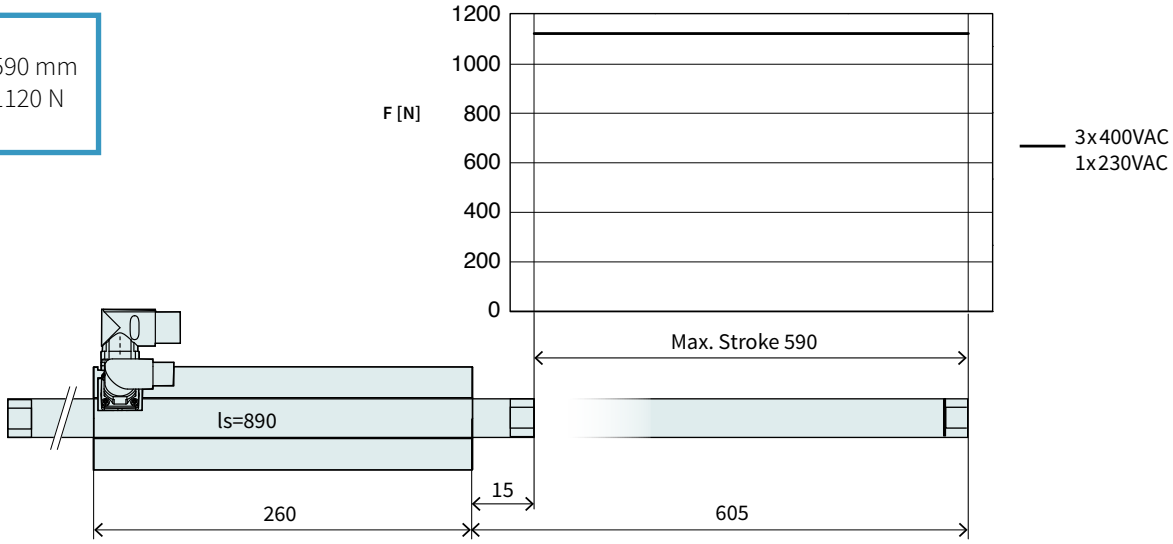

Dimensions in mm

Technical Data P10-70x160U/590				
Stroke				
Max. Stroke	mm	(in)	590	(23.19)
Force				
Max. Force @ 1x230VAC	N	(lbf)	1120	(252)
Max. Force @ 3x400VAC	N	(lbf)	1120	(252)
Max. Cont. Force [Passive cooling/ Fan / Fluid]	N	(lbf)	130 / 200 / 350	(29 / 45 / 79)
Max. Border Force relative	%		100	
Force Constant 1	N/A_{pk}	(lbf/A_{pk})	56	(12.6)
Force Constant 2	N/A_{rms}	(lbf/A_{rms})	79.2	(17.8)
Velocity				
Max. Velocity @ 1x230VAC	m/s	(in/s)	3.2	(129.9)
Max. Velocity @ 3x400VAC	m/s	(in/s)	5.6	(5.6)
Position Detection				
Repeatability	mm	(in)	±0.05	(±0.002)
Linearity	%		± 0.2	
Electrical Data				
Max. Current @ 1x230VAC	A_{pk} / A_{rms}		19.9 / 14	
Max. Current @ 3x400VAC	A_{pk} / A_{rms}		19.9 / 14	
Max. Cont. Current 1 [Passive cooling /Fan / Fluid]	A_{pk}		2.3 / 3.6 / 6.3	
Max. Cont. Current 2 [Passive cooling /Fan / Fluid]	A_{rms}		1.7 / 2.5 / 4.4	
Thermal Data				
Max. Winding Temperature (Sensor)	°C		90	
Thermal Resistance [Passive cooling / Fan / Fluid]	°K/W		1.3 / 0.56 / 0.18	
Thermal Time Constant [Passive cooling / Fan / Fluid]	s		2100 / 500 / 110	
Mechanical Data				
Slider Length	mm	(in)	890	(35)
Slider Mass	g	(lb)	4180	(9.2)

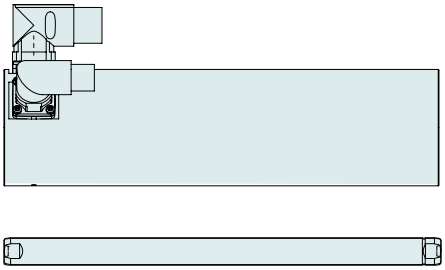

Item	Description	Item-No.
PS10-70x160U-BL-QJ	Stator 3x400VAC, LinMot Encoder	0150-1292
PS10-70x160U-BL-QJ-D01	Stator 3x400VAC, Sin/Cos Encoder 1Vpp, KTY	0150-2283
PS10-70x160U-BL-QJ-D02	Stator 3x400VAC, Sin/Cos Encoder 1Vpp, PTC	0150-2361
PS10-70x160U-BL-QJ-D03	Stator 3x400VAC, Sin/Cos 1Vpp, KTY on power connector	0150-2709
PL10-28x890/840	Slider for P10-70 'standard'	0150-2199

P10-70x160U/690-BL-QJ

Max. Stroke: 690 mm
Peak Force: 1120 N

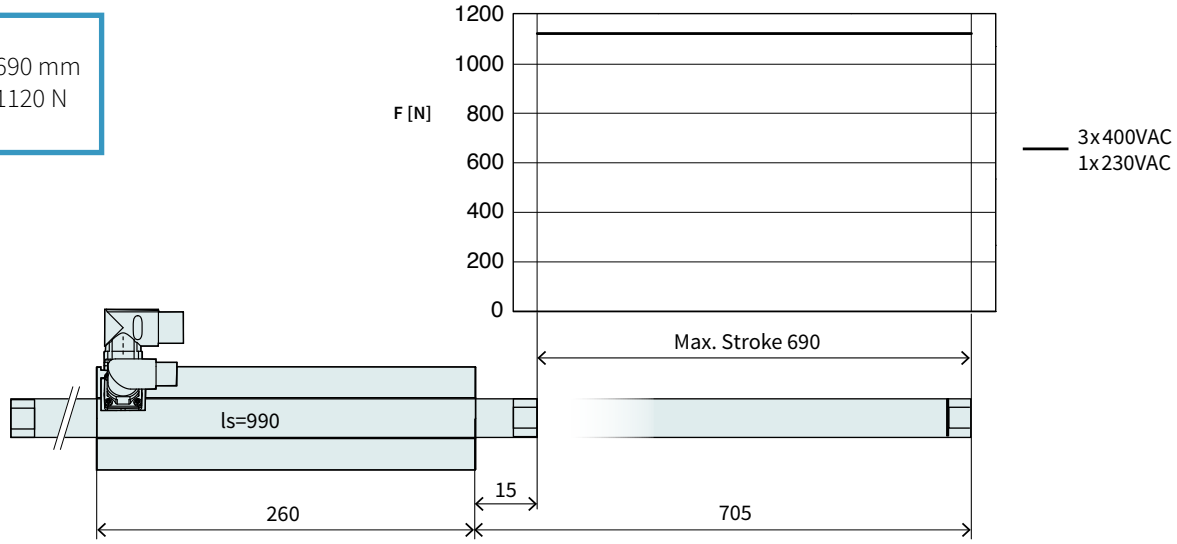

Dimensions in mm

Technical Data P10-70x160U/690				
Stroke				
Max. Stroke	mm	(in)	690	(27.19)
Force				
Max. Force @ 1x230VAC	N	(lbf)	1120	(252)
Max. Force @ 3x400VAC	N	(lbf)	1120	(252)
Max. Cont. Force [Passive cooling/ Fan / Fluid]	N	(lbf)	130 / 200 / 350	(29 / 45 / 79)
Max. Border Force relative	%		100	
Force Constant 1	N/A_{pk}	(lbf/A_{pk})	56	(12.6)
Force Constant 2	N/A_{rms}	(lbf/A_{rms})	79.2	(17.8)
Velocity				
Max. Velocity @ 1x230VAC	m/s	(in/s)	3.2	(129.9)
Max. Velocity @ 3x400VAC	m/s	(in/s)	5.6	(5.6)
Position Detection				
Repeatability	mm	(in)	±0.05	(±0.002)
Linearity	%		± 0.15	
Electrical Data				
Max. Current @ 1x230VAC	A_{pk} / A_{rms}		19.9 / 14	
Max. Current @ 3x400VAC	A_{pk} / A_{rms}		19.9 / 14	
Max. Cont. Current 1 [Passive cooling /Fan / Fluid]	A_{pk}		2.3 / 3.6 / 6.3	
Max. Cont. Current 2 [Passive cooling /Fan / Fluid]	A_{rms}		1.7 / 2.5 / 4.4	
Thermal Data				
Max. Winding Temperature (Sensor)	°C		90	
Thermal Resistance [Passive cooling / Fan / Fluid]	°K/W		1.3 / 0.56 / 0.18	
Thermal Time Constant [Passive cooling / Fan / Fluid]	s		2100 / 500 / 110	
Mechanical Data				
Slider Length	mm	(in)	990	(39)
Slider Mass	g	(lb)	4650	(10.23)



Item	Description	Item-No.
PS10-70x160U-BL-QJ	Stator 3x400VAC, LinMot Encoder	0150-1292
PS10-70x160U-BL-QJ-D01	Stator 3x400VAC, Sin/Cos Encoder 1Vpp, KTY	0150-2283
PS10-70x160U-BL-QJ-D02	Stator 3x400VAC, Sin/Cos Encoder 1Vpp, PTC	0150-2361
PS10-70x160U-BL-QJ-D03	Stator 3x400VAC, Sin/Cos 1Vpp, KTY on power connector	0150-2709
PL10-28x990/940	Slider for P10-70 'standard'	0150-2203

P10-70x160U/890-BL-QJ

Max. Stroke: 890 mm
Peak Force: 1120 N

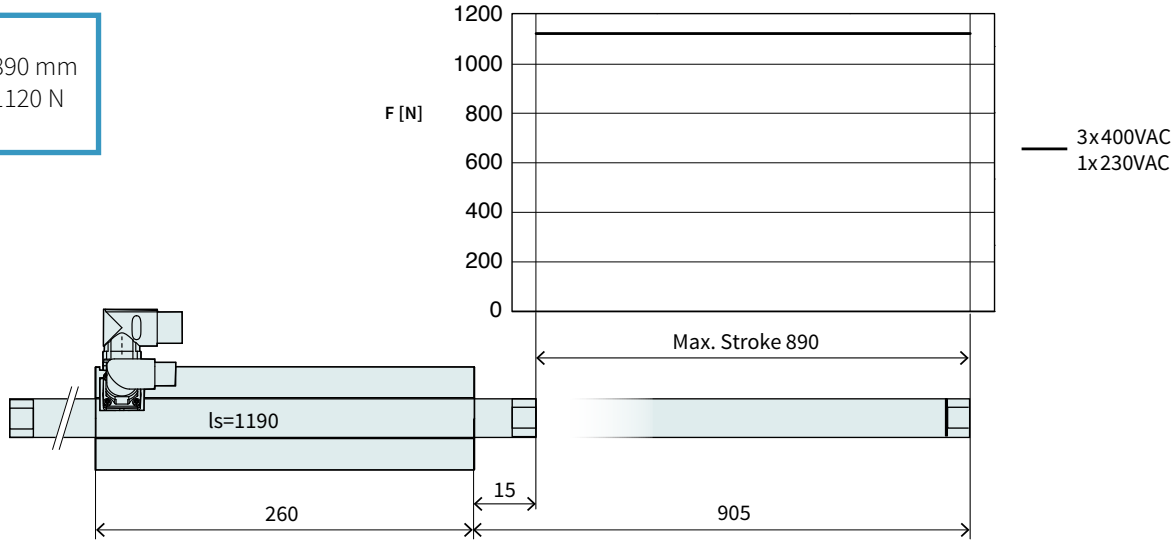

Dimensions in mm

Technical Data P10-70x160U/890				
Stroke				
Max. Stroke	mm	(in)	890	(34.99)
Force				
Max. Force @ 1x230VAC	N	(lbf)	1120	(252)
Max. Force @ 3x400VAC	N	(lbf)	1120	(252)
Max. Cont. Force [Passive cooling/ Fan / Fluid]	N	(lbf)	130 / 200 / 350	(29 / 45 / 79)
Max. Border Force relative	%		100	
Force Constant 1	N/A_{pk}	(lbf/A_{pk})	56	(12.6)
Force Constant 2	N/A_{rms}	(lbf/A_{rms})	79.2	(17.8)
Velocity				
Max. Velocity @ 1x230VAC	m/s	(in/s)	3.2	(129.9)
Max. Velocity @ 3x400VAC	m/s	(in/s)	5.6	(5.6)
Position Detection				
Repeatability	mm	(in)	±0.05	(±0.002)
Linearity	%		± 0.15	
Electrical Data				
Max. Current @ 1x230VAC	A_{pk} / A_{rms}		19.9 / 14	
Max. Current @ 3x400VAC	A_{pk} / A_{rms}		19.9 / 14	
Max. Cont. Current 1 [Passive cooling /Fan / Fluid]	A_{pk}		2.3 / 3.6 / 6.3	
Max. Cont. Current 2 [Passive cooling /Fan / Fluid]	A_{rms}		1.7 / 2.5 / 4.4	
Thermal Data				
Max. Winding Temperature (Sensor)	°C		90	
Thermal Resistance [Passive cooling / Fan / Fluid]	°K/W		1.3 / 0.56 / 0.18	
Thermal Time Constant [Passive cooling / Fan / Fluid]	s		2100 / 500 / 110	
Mechanical Data				
Slider Length	mm	(in)	1190	(47)
Slider Mass	g	(lb)	5590	(12.3)

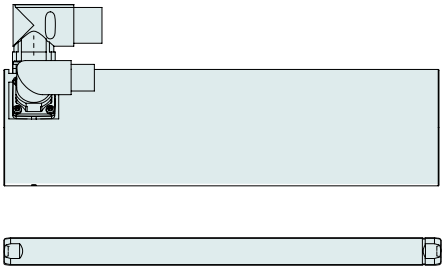

Item	Description	Item-No.
PS10-70x160U-BL-QJ	Stator 3x400VAC, LinMot Encoder	0150-1292
PS10-70x160U-BL-QJ-D01	Stator 3x400VAC, Sin/Cos Encoder 1Vpp, KTY	0150-2283
PS10-70x160U-BL-QJ-D02	Stator 3x400VAC, Sin/Cos Encoder 1Vpp, PTC	0150-2361
PS10-70x160U-BL-QJ-D03	Stator 3x400VAC, Sin/Cos 1Vpp, KTY on power connector	0150-2709
PL10-28x1190/1140	Slider for P10-70 'standard'	0150-2204

P10-70x160U/1090-BL-QJ

Max. Stroke: 1090 mm
Peak Force: 1120 N

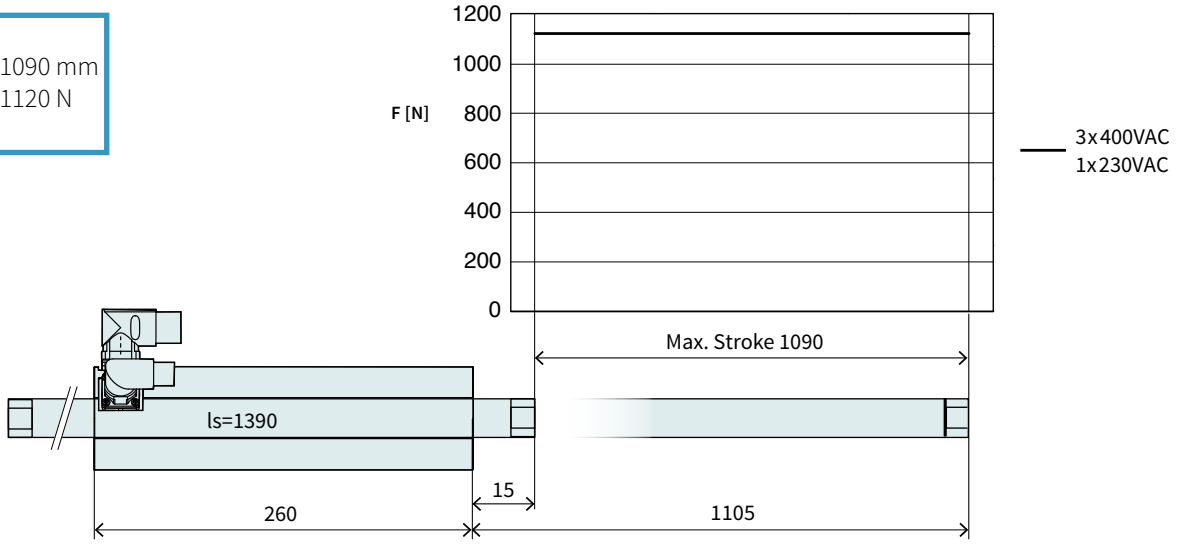

Dimensions in mm

Technical Data P10-70x160U/1090				
Stroke				
Max. Stroke	mm	(in)	1090	(42.89)
Force				
Max. Force @ 1x230VAC	N	(lbf)	1120	(252)
Max. Force @ 3x400VAC	N	(lbf)	1120	(252)
Max. Cont. Force [Passive cooling/ Fan / Fluid]	N	(lbf)	130 / 200 / 350	(29 / 45 / 79)
Max. Border Force relative	%		100	
Force Constant 1	N/A_{pk}	(lbf/A_{pk})	56	(12.6)
Force Constant 2	N/A_{rms}	(lbf/A_{rms})	79.2	(17.8)
Velocity				
Max. Velocity @ 1x230VAC	m/s	(in/s)	3.2	(129.9)
Max. Velocity @ 3x400VAC	m/s	(in/s)	5.6	(5.6)
Position Detection				
Repeatability	mm	(in)	±0.05	(±0.002)
Linearity	%		± 0.15	
Electrical Data				
Max. Current @ 1x230VAC	A_{pk} / A_{rms}		19.9 / 14	
Max. Current @ 3x400VAC	A_{pk} / A_{rms}		19.9 / 14	
Max. Cont. Current 1 [Passive cooling /Fan / Fluid]	A_{pk}		2.3 / 3.6 / 6.3	
Max. Cont. Current 2 [Passive cooling /Fan / Fluid]	A_{rms}		1.7 / 2.5 / 4.4	
Thermal Data				
Max. Winding Temperature (Sensor)	°C		90	
Thermal Resistance [Passive cooling / Fan / Fluid]	°K/W		1.3 / 0.56 / 0.18	
Thermal Time Constant [Passive cooling / Fan / Fluid]	s		2100 / 500 / 110	
Mechanical Data				
Slider Length	mm	(in)	1390	(55)
Slider Mass	g	(lb)	6530	(14.37)

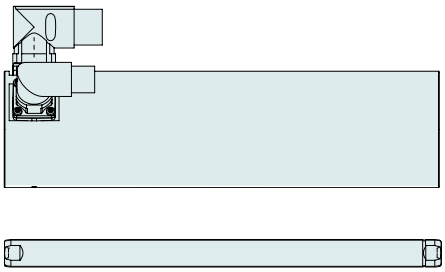

Item	Description	Item-No.
PS10-70x160U-BL-QJ	Stator 3x400VAC, LinMot Encoder	0150-1292
PS10-70x160U-BL-QJ-D01	Stator 3x400VAC, Sin/Cos Encoder 1Vpp, KTY	0150-2283
PS10-70x160U-BL-QJ-D02	Stator 3x400VAC, Sin/Cos Encoder 1Vpp, PTC	0150-2361
PS10-70x160U-BL-QJ-D03	Stator 3x400VAC, Sin/Cos 1Vpp, KTY on power connector	0150-2709
PL10-28x1390/1340	Slider for P10-70 'standard'	0150-2205

P10-70x160U/1290-BL-QJ

Max. Stroke: 1290 mm
Peak Force: 1120 N

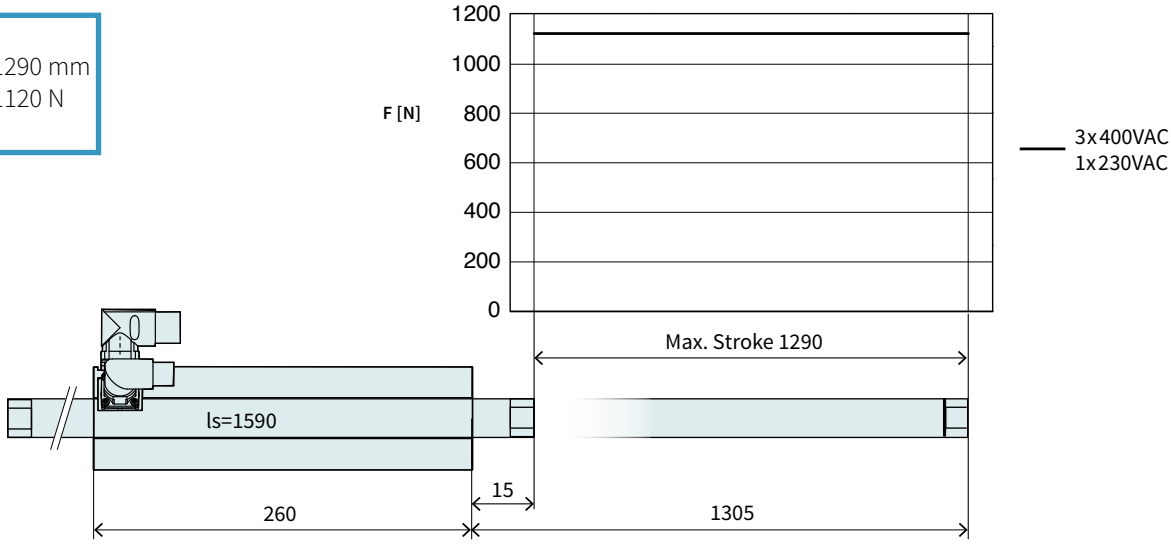

Dimensions in mm

Technical Data P10-70x160U/1290				
Stroke				
Max. Stroke	mm	(in)	1290	(50.79)
Force				
Max. Force @ 1x230VAC	N	(lbf)	1120	(252)
Max. Force @ 3x400VAC	N	(lbf)	1120	(252)
Max. Cont. Force [Passive cooling/ Fan / Fluid]	N	(lbf)	130 / 200 / 350	(29 / 45 / 79)
Max. Border Force relative	%		100	
Force Constant 1	N/A_{pk}	(lbf/A_{pk})	56	(12.6)
Force Constant 2	N/A_{rms}	(lbf/A_{rms})	79.2	(17.8)
Velocity				
Max. Velocity @ 1x230VAC	m/s	(in/s)	3.2	(129.9)
Max. Velocity @ 3x400VAC	m/s	(in/s)	5.6	(5.6)
Position Detection				
Repeatability	mm	(in)	±0.05	(±0.002)
Linearity	%		± 0.15	
Electrical Data				
Max. Current @ 1x230VAC	A_{pk} / A_{rms}		19.9 / 14	
Max. Current @ 3x400VAC	A_{pk} / A_{rms}		19.9 / 14	
Max. Cont. Current 1 [Passive cooling /Fan / Fluid]	A_{pk}		2.3 / 3.6 / 6.3	
Max. Cont. Current 2 [Passive cooling /Fan / Fluid]	A_{rms}		1.7 / 2.5 / 4.4	
Thermal Data				
Max. Winding Temperature (Sensor)	°C		90	
Thermal Resistance [Passive cooling / Fan / Fluid]	°K/W		1.3 / 0.56 / 0.18	
Thermal Time Constant [Passive cooling / Fan / Fluid]	s		2100 / 500 / 110	
Mechanical Data				
Slider Length	mm	(in)	1590	(63)
Slider Mass	g	(lb)	7470	(16.43)

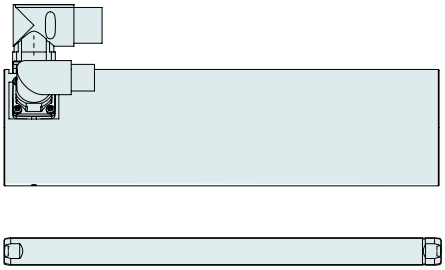

Item	Description	Item-No.
PS10-70x160U-BL-QJ	Stator 3x400VAC, LinMot Encoder	0150-1292
PS10-70x160U-BL-QJ-D01	Stator 3x400VAC, Sin/Cos Encoder 1Vpp, KTY	0150-2283
PS10-70x160U-BL-QJ-D02	Stator 3x400VAC, Sin/Cos Encoder 1Vpp, PTC	0150-2361
PS10-70x160U-BL-QJ-D03	Stator 3x400VAC, Sin/Cos 1Vpp, KTY on power connector	0150-2709
PL10-28x1590/1540	Slider for P10-70 'standard'	0150-2206

P10-70x160U/1490-BL-QJ

Max. Stroke: 1490 mm
Peak Force: 1120 N

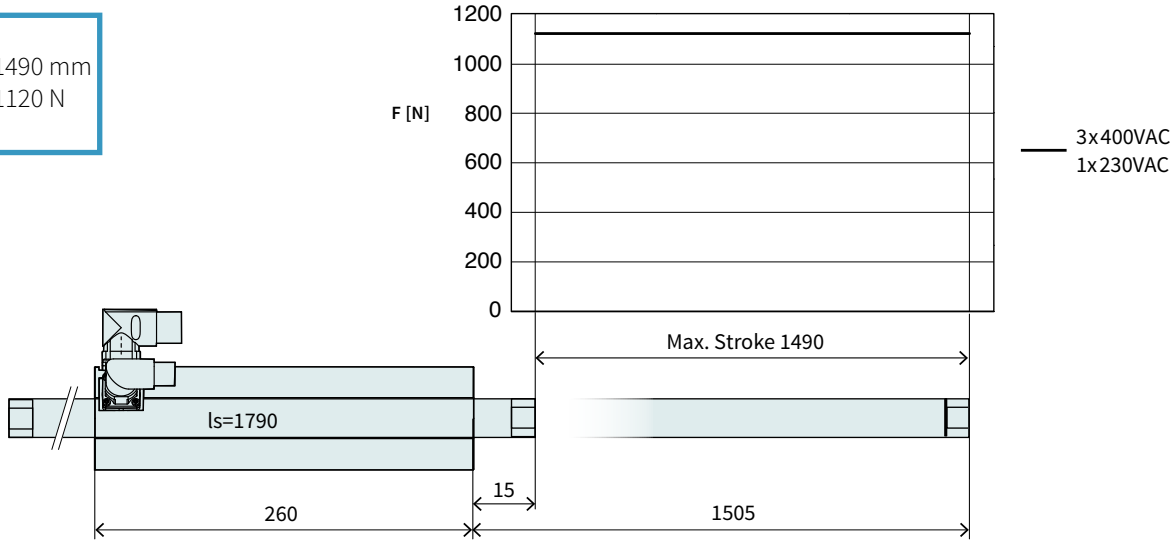

Dimensions in mm

Technical Data P10-70x160U/1490				
Stroke				
Max. Stroke	mm	(in)	1490	(58.7)
Force				
Max. Force @ 1x230VAC	N	(lbf)	1120	(252)
Max. Force @ 3x400VAC	N	(lbf)	1120	(252)
Max. Cont. Force [Passive cooling/ Fan / Fluid]	N	(lbf)	130 / 200 / 350	(29 / 45 / 79)
Max. Border Force relative	%		100	
Force Constant 1	N/A_{pk}	(lbf/A_{pk})	56	(12.6)
Force Constant 2	N/A_{rms}	(lbf/A_{rms})	79.2	(17.8)
Velocity				
Max. Velocity @ 1x230VAC	m/s	(in/s)	3.2	(129.9)
Max. Velocity @ 3x400VAC	m/s	(in/s)	5.6	(5.6)
Position Detection				
Repeatability	mm	(in)	±0.05	(±0.002)
Linearity	%		± 0.15	
Electrical Data				
Max. Current @ 1x230VAC	A_{pk} / A_{rms}		19.9 / 14	
Max. Current @ 3x400VAC	A_{pk} / A_{rms}		19.9 / 14	
Max. Cont. Current 1 [Passive cooling /Fan / Fluid]	A_{pk}		2.3 / 3.6 / 6.3	
Max. Cont. Current 2 [Passive cooling /Fan / Fluid]	A_{rms}		1.7 / 2.5 / 4.4	
Thermal Data				
Max. Winding Temperature (Sensor)	°C		90	
Thermal Resistance [Passive cooling / Fan / Fluid]	°K/W		1.3 / 0.56 / 0.18	
Thermal Time Constant [Passive cooling / Fan / Fluid]	s		2100 / 500 / 110	
Mechanical Data				
Slider Length	mm	(in)	1790	(70)
Slider Mass	g	(lb)	8413	(18.51)

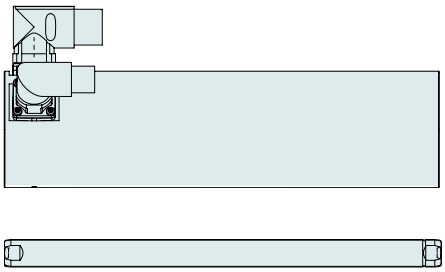

Item	Description	Item-No.
PS10-70x160U-BL-QJ	Stator 3x400VAC, LinMot Encoder	0150-1292
PS10-70x160U-BL-QJ-D01	Stator 3x400VAC, Sin/Cos Encoder 1Vpp, KTY	0150-2283
PS10-70x160U-BL-QJ-D02	Stator 3x400VAC, Sin/Cos Encoder 1Vpp, PTC	0150-2361
PS10-70x160U-BL-QJ-D03	Stator 3x400VAC, Sin/Cos 1Vpp, KTY on power connector	0150-2709
PL10-28x1790/1740	Slider for P10-70 'standard'	0150-2207

P10-70x160U/1690-BL-QJ

Max. Stroke: 1690 mm
Peak Force: 1120 N

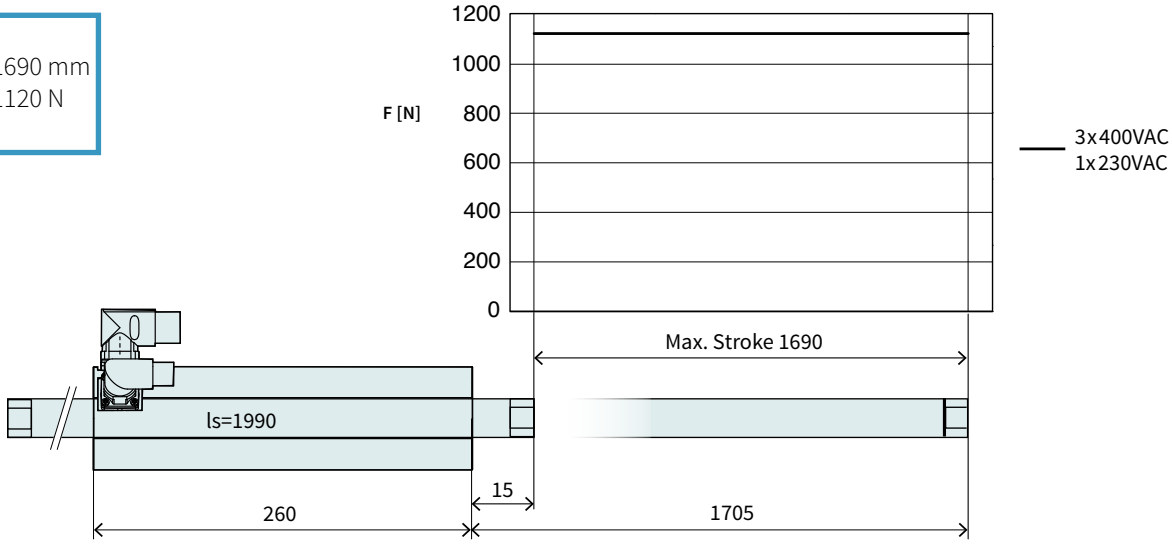

Dimensions in mm

Technical Data P10-70x160U/1690				
Stroke				
Max. Stroke	mm	(in)	1690	(66.49)
Force				
Max. Force @ 1x230VAC	N	(lbf)	1120	(252)
Max. Force @ 3x400VAC	N	(lbf)	1120	(252)
Max. Cont. Force [Passive cooling/ Fan / Fluid]	N	(lbf)	130 / 200 / 350	(29 / 45 / 79)
Max. Border Force relative	%		100	
Force Constant 1	N/A_{pk}	(lbf/A_{pk})	56	(12.6)
Force Constant 2	N/A_{rms}	(lbf/A_{rms})	79.2	(17.8)
Velocity				
Max. Velocity @ 1x230VAC	m/s	(in/s)	3.2	(129.9)
Max. Velocity @ 3x400VAC	m/s	(in/s)	5.6	(5.6)
Position Detection				
Repeatability	mm	(in)	±0.05	(±0.002)
Linearity	%		± 0.15	
Electrical Data				
Max. Current @ 1x230VAC	A_{pk} / A_{rms}		19.9 / 14	
Max. Current @ 3x400VAC	A_{pk} / A_{rms}		19.9 / 14	
Max. Cont. Current 1 [Passive cooling /Fan / Fluid]	A_{pk}		2.3 / 3.6 / 6.3	
Max. Cont. Current 2 [Passive cooling /Fan / Fluid]	A_{rms}		1.7 / 2.5 / 4.4	
Thermal Data				
Max. Winding Temperature (Sensor)	°C		90	
Thermal Resistance [Passive cooling / Fan / Fluid]	°K/W		1.3 / 0.56 / 0.18	
Thermal Time Constant [Passive cooling / Fan / Fluid]	s		2100 / 500 / 110	
Mechanical Data				
Slider Length	mm	(in)	1990	(78)
Slider Mass	g	(lb)	9350	(20.57)

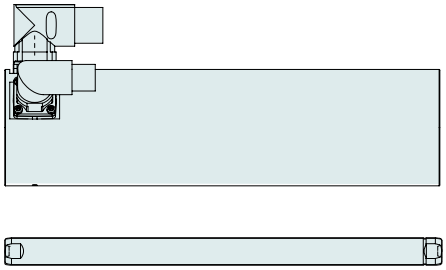

Item	Description	Item-No.
PS10-70x160U-BL-QJ	Stator 3x400VAC, LinMot Encoder	0150-1292
PS10-70x160U-BL-QJ-D01	Stator 3x400VAC, Sin/Cos Encoder 1Vpp, KTY	0150-2283
PS10-70x160U-BL-QJ-D02	Stator 3x400VAC, Sin/Cos Encoder 1Vpp, PTC	0150-2361
PS10-70x160U-BL-QJ-D03	Stator 3x400VAC, Sin/Cos 1Vpp, KTY on power connector	0150-2709
PL10-28x1990/1940	Slider for P10-70 'standard'	0150-2208

Linear Guides H10



HM10-70x160/90	**Linear Module 70x160 with 90 mm Stroke**			
H-Guide	H10-70x160/90	H-Guide for P10-70x160, Stroke max. 90 mm	0150-5409
Stator	PS10-70x160U-BL-QJ	Stator 3x400VAC, LinMot Encoder	0150-1292
	PS10-70x160U-BL-QJ-D01	Stator 3x400VAC, Sin/Cos Encoder 1Vpp, KTY	0150-2283
	PS10-70x160U-BL-QJ-D02	Stator 3x400VAC, Sin/Cos Encoder 1Vpp, PTC	0150-2361
	PS10-70x160U-BL-QJ-D03	Stator 3x400VAC, Sin/Cos 1Vpp, KTY on power connector	0150-2709
Slider	PL10-28x390/340	Slider for P10-70 'standard'	0150-2194
HM10-70x160/190	**Linear Module 70x160 with 190 mm Stroke**			
H-Guide	H10-70x160/190	H-Guide for P10-70x160, Stroke max. 190 mm	0150-5410
Stator	PS10-70x160U-BL-QJ	Stator 3x400VAC, LinMot Encoder	0150-1292
	PS10-70x160U-BL-QJ-D01	Stator 3x400VAC, Sin/Cos Encoder 1Vpp, KTY	0150-2283
	PS10-70x160U-BL-QJ-D02	Stator 3x400VAC, Sin/Cos Encoder 1Vpp, PTC	0150-2361
	PS10-70x160U-BL-QJ-D03	Stator 3x400VAC, Sin/Cos 1Vpp, KTY on power connector	0150-2709
Slider	PL10-28x490/440	Slider for P10-70 'standard'	0150-2195
HM10-70x160/290	**Linear Module 70x160 with 290 mm Stroke**			
H-Guide	H10-70x160/290	H-Guide for P10-70x160, Stroke max. 290 mm	0150-5411
Stator	PS10-70x160U-BL-QJ	Stator 3x400VAC, LinMot Encoder	0150-1292
	PS10-70x160U-BL-QJ-D01	Stator 3x400VAC, Sin/Cos Encoder 1Vpp, KTY	0150-2283
	PS10-70x160U-BL-QJ-D02	Stator 3x400VAC, Sin/Cos Encoder 1Vpp, PTC	0150-2361
	PS10-70x160U-BL-QJ-D03	Stator 3x400VAC, Sin/Cos 1Vpp, KTY on power connector	0150-2709
Slider	PL10-28x590/540	Slider for P10-70 'standard'	0150-2196

FIND MORE PRODUCT DETAILS IN THE CHAPTER "LINEAR GUIDES".

HM10-70x160/390	Linear Module 70x160 with 390 mm Stroke		
H-Guide	H10-70x160/390	H-Guide for P10-70x160, Stroke max. 390 mm	0150-5412
Stator	PS10-70x160U-BL-QJ	Stator 3x400VAC, LinMot Encoder	0150-1292
	PS10-70x160U-BL-QJ-D01	Stator 3x400VAC, Sin/Cos Encoder 1Vpp, KTY	0150-2283
	PS10-70x160U-BL-QJ-D02	Stator 3x400VAC, Sin/Cos Encoder 1Vpp, PTC	0150-2361
	PS10-70x160U-BL-QJ-D03	Stator 3x400VAC, Sin/Cos 1Vpp, KTY on power connector	0150-2709
Slider	PL10-28x690/640	Slider for P10-70 'standard'	0150-2197

HM10-70x160/490	Linear Module 70x160 with 490 mm Stroke		
H-Guide	H10-70x160/490	H-Guide for P10-70x160, Stroke max. 490 mm	0150-5413
Stator	PS10-70x160U-BL-QJ	Stator 3x400VAC, LinMot Encoder	0150-1292
	PS10-70x160U-BL-QJ-D01	Stator 3x400VAC, Sin/Cos Encoder 1Vpp, KTY	0150-2283
	PS10-70x160U-BL-QJ-D02	Stator 3x400VAC, Sin/Cos Encoder 1Vpp, PTC	0150-2361
	PS10-70x160U-BL-QJ-D03	Stator 3x400VAC, Sin/Cos 1Vpp, KTY on power connector	0150-2709
Slider	PL10-28x790/740	Slider for P10-70 'standard'	0150-2198

Accessories			
Fan	HV01-37/48	Fan cooling for H01-37/48 &PF02-37/48	0150-5051

Motor Cable

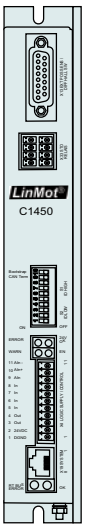

C1400

B Connector MC10-B/m

Q Connector MC10-Q/f

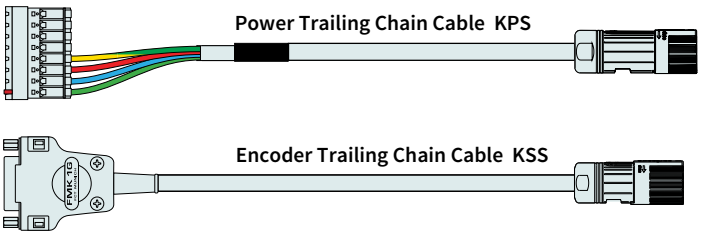

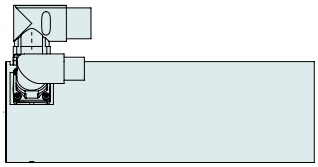

P10-70x160U

D15 Connector MC01-D15/f

J Connector MC10-J/f



E1400

L Connector MC10-L/m

Q Connector MC10-Q/f

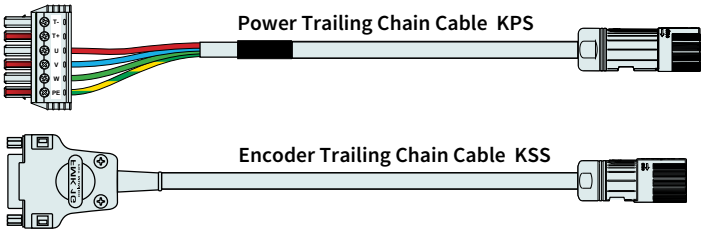

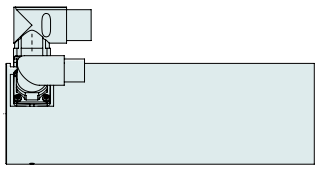

P10-70x160U

D15 Connector MC01-D15/f

J Connector MC10-J/f

ORDERING INFORMATION

TRAILING CHAIN CABLE FOR LINMOT DRIVES		
Item	**Description**	**Item-No.**
KPS15-04-L/Q-3	Power Trailing Chain Cable E1400/P10-70, 3 m	0150-2266
KPS15-04-L/Q-5	Power Trailing Chain Cable E1400/P10-70, 5 m	0150-2261
KPS15-04-L/Q-8	Power Trailing Chain Cable E1400/P10-70, 8 m	0150-2267
KPS15-04-L/Q-12	Power Trailing Chain Cable E1400/P10-70, 12 m	0150-2268
KPS15-04-L/Q-	Power Trailing Chain Cable L/Q-, Custom length	0150-3388
KPS15-04-B/Q-3	Power Trailing Chain Cable C1400/P10-70, 3 m	0150-3660
KPS15-04-B/Q-5	Power Trailing Chain Cable C1400/P10-70, 5 m	0150-3661
KPS15-04-B/Q-8	Power Trailing Chain Cable C1400/P10-70, 8 m	0150-3662
KPS15-04-B/Q-12	Power Trailing Chain Cable C1400/P10-70, 12 m	0150-3663
KPS15-04-B/Q-	Power Trailing Chain Cable B/Q-, Custom length	0150-3608

TRAILING CHAIN CABLE FOR LINMOT DRIVES		
Item	**Description**	**Item-No.**
KSS 05-02/08-D15/J-3	Encoder Trailing Chain Cable D15/J, 3 m	0150-2263
KSS 05-02/08-D15/J-5	Encoder Trailing Chain Cable D15/J, 5 m	0150-2262
KSS 05-02/08-D15/J-8	Encoder Trailing Chain Cable D15/J, 8 m	0150-2264
KSS 05-02/08-D15/J-12	Encoder Trailing Chain Cable D15/J, 12 m	0150-2265
KSS 05-02/08-D15(f)-45°/J-	Encoder Trailing Chain Cable D15/J-, Custom length	0150-3389

TRAILING CHAIN CABLE FOR STATOR SERIES D01 / D02		
Item	**Description**	**Item-No.**
KPS15-04-..../Q-10	Power Trailing Chain Cable .../Q, 10 m for D0x	0150-2376
KPS15-04-./Q-	Power Trailing Chain Cable .../Q, for D0x, Custom length	0150-3491
KSS05-02/13-./J-10	Encoder Trailing Chain Cable ./J, 10 m for D0x	0150-2377
KSS05-02/13-./J-	Encoder Trailing Chain Cable ./J, for D0x, Custom length	0150-3492
KPS15-04	Power Trailing Chain Cable P10-70 (per m)	0150-2257
KSS05-02/13	Trailing Chain Cable Encoder P10-...-Dxx (per m)	0150-2259

TRAILING CHAIN CABLE FOR STATOR SERIES D03		
Item	**Description**	**Item-No.**
KPS15-04/04..../Q-10	Power Trailing Chain Cable .../Q, 10 m for D03	0150-3654
KPS15-04/04-./Q-	Power Trailing Chain Cable .../Q, for D03, Custom length	0150-3579
KSS05-02/06-./J-10	Encoder Trailing Chain Cable ./J, 10 m for D03	0150-3655
KSS05-02/06-./J-	Encoder Trailing Chain Cable ./J, for D03, Custom length	0150-3611
KPS15-04/04	Power Trailing Chain Cable P10-...-Dx3 (per m)	0150-2269
KSS05-02/06	Trailing Chain Cable Encoder P10-...-Dx3 (per m)	0150-2490

CONNECTOR		
Item	**Description**	**Item-No.**
MC10-L/m	Connector Power E1400/X2	0150-3382
MC01-D15/f	Motor Connector D15 (f)	0150-3136
MC10-Q/f	Connector Power PS10-70	0150-2268
MC10-J/f	Connector Encoder PS10-70	0150-2269

MOTOR FLANGES



Item	Description	Item-No.
PF10-70x190	Flange for PS10-70x160	0150-2273



Item	Description	Item-No.
PF10-70x190-FC	Flange for PS10-70x160 fluid cooling	0150-2292

FIND MORE PRODUCT DETAILS IN THE CHAPTER "ACCESSORIES".

FANS



Item	Description	Item-No.
HV01-37/48	Fan cooling for H01-37/48 &PF02-37/48	0150-5051

FIND MORE PRODUCT DETAILS IN THE CHAPTER "ACCESSORIES".

SLIDER MOUNTING



Item	Description	Item-No.
PLF01-28	Fixed Bearing Set for 27/28 mm sliders	0150-3087
PLF01-28-SS	Fixed Bearing Set for 27/28 mm sliders, stainless steel	0150-3297
PLL01-28	Floating Bearing for 28 mm sliders	0150-3094
PLM01-28-MK	Mounting Kit for 28 mm sliders	0150-3095

FIND MORE PRODUCT DETAILS IN THE CHAPTER "ACCESSORIES".

BEARING KIT



Item	Description	Item-No.
PB10-70x160-L	Bearing Kit for PS10-70x160	0150-3432

FIND MORE PRODUCT DETAILS IN THE CHAPTER "ACCESSORIES".

LUBRICANT RESERVOIR



Item	Description	Item-No.
PA10-70/28	Lubricant reservoir for PS10-70 with lubricating nipple	0150-3543

FIND MORE PRODUCT DETAILS IN THE CHAPTER "ACCESSORIES".

EXTERNAL POSITION SENSORS



Item	Description	Item-No.
MS01-1/D	Linear Encoder 1µm, A/B (for incremental strip)	0150-1840
MB01-1000	Magnetic incremental strip for MS01-1/D, per cm	0150-1963
KS025-D15/D-Encoder	Encoder Cable (Length in m)	0150-3168

FIND MORE PRODUCT DETAILS IN THE CHAPTER "ACCESSORIES".



Item	Description	Item-No.
MS01-1/D-SSI	Linear Encoder 1µm, A/B (for absolute strip)	0150-2095
MB01-1000-ABS	Magnetic absolute strip for MS01-1/D-SSI (per cm)	0150-2096
EC01-ABS/ENC-12-S	MS01-1/D-SSI Encoder connector straight	0150-3616
KSS01-12-D15/ABS-ENC	Special cable for MS01-1/D-SSI on C1100/C1200/C1400/E1200/E1400 Drives	0150-3652

FIND MORE PRODUCT DETAILS IN THE CHAPTER "ACCESSORIES".

LINEAR MOTORS P10-70x240U



- 3 x 400VAC Technology
- Peak forces up to 1650 N
- Extremely high dynamic
- Separate connector for sensor and power cable
- Can also be controlled by standard third-party servo drives

4

LINEAR MOTORS P10-70x240U

Technical Data ____ **545**

Motor Specifications

P10-70x240U/10 ..... **550**
P10-70x240U/110 ..... **551**
P10-70x240U/210 ..... **552**
P10-70x240U/310 ..... **553**
P10-70x240U/410 ..... **554**
P10-70x240U/510 ..... **555**
P10-70x240U/610 ..... **556**
P10-70x240U/810 ..... **557**
P10-70x240U/1010 ..... **558**
P10-70x240U/1210 ..... **559**
P10-70x240U/1410 ..... **560**
P10-70x240U/1610 ..... **561**

Linear Guides ____ **562**

Accessories ____ **564**



MOTOR FAMILY P10-70x240U

Technical Data				
Stroke				
Max. Stroke (ES)	mm	(in)	1610	(63.39)
Force				
Max. Force @ 1x230VAC	N	(lbf)	1650	(371)
Max. Force @ 3x400VAC	N	(lbf)	1650	(371)
Max. Cont. Force [Passive cooling/ Fan / Fluid]	N	(lbf)	190 / 290 / 510	(43 / 66 / 120)
Max. Border Force relative	%		100	
Force Constant 1	N/A_{pk}	(lbf/A_{pk})	59	(13.3)
Force Constant 2	N/A_{rms}	(lbf/A_{rms})	83.4	(18.8)
Velocity				
Max. Velocity @ 1x230VAC	m/s	(in/s)	3	(119.9)
Max. Velocity @ 3x400VAC	m/s	(in/s)	5.4	(209.9)
Position Detection				
Position Resolution	mm	(in)	0.005	(0.0002)
Repeatability	mm	(in)	±0.05	(±0.002)
Position Resolution with ES	mm	(in)	0.001	(0.00004)
Repeatability with ES	mm	(in)	±0.01	(±0.0004)
Linearity with ES	mm	(in)	±0.01	(±0.0004)
Electrical Data				
Max. Current @ 1x230VAC	A_{pk} / A_{rms}		27.9 / 19.7	
Max. Current @ 3x400VAC	A_{pk} / A_{rms}		27.9 / 19.7	
Max. Cont. Current 1 [Passive cooling /Fan / Fluid]	A_{pk}		3.3 / 5 / 8.7	
Max. Cont. Current 2 [Passive cooling /Fan / Fluid]	A_{rms}		2.3 / 3.5 / 6.1	
Back EMF Constant	V_{pk} / (m/s)	(V_{pk} / (in/s))	68.1	(1.73)
Terminal Resistance 25 °C / 120 °C	Ohm		6.3 / 8.6	
Terminal Inductivity	mH		12	
Magnetic Period	mm	(in)	40	(1.57)
Thermal Data				
Max. Winding Temperature (Sensor)	°C		90	
Thermal Resistance [Passive cooling / Fan / Fluid]	°K/W		0.87 / 0.38 / 0.12	
Thermal Time Constant [Passive cooling / Fan / Fluid]	s		2100 / 510 / 110	
Mechanical Data				
Stator Diameter	mm	(in)	70	(2.8)
Stator Length	mm	(in)	340	(13)
Stator Mass	g	(lb)	5550	(12.21)
Slider Diameter	mm	(in)	28	(1.1)
Slider Length	mm	(in)	390 - 1990	(15 - 78)
Slider Mass	g	(lb)	1830 - 9350	(4.03 - 20.57)
IP Code			IP 65	
Certification				
UL	File-No.		E354430	

STATOR

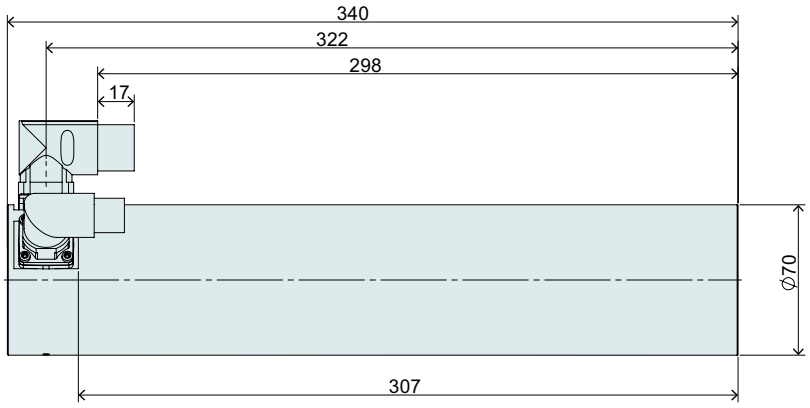

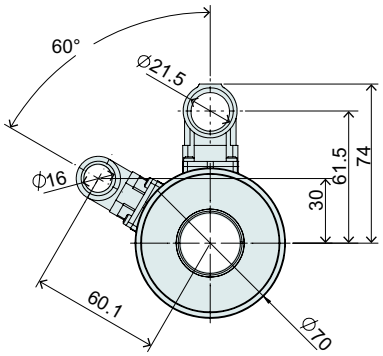

Item	Description	Item-No.
PS10-70x240U-BL-QJ	Stator 3x400VAC, LinMot Encoder	0150-1293
PS10-70x240U-BL-QJ-D01	Stator 3x400VAC, Sin/Cos Encoder 1Vpp, KTY	0150-2284
PS10-70x240U-BL-QJ-D02	Stator 3x400VAC, Sin/Cos Encoder 1Vpp, PTC	0150-2362
PS10-70x240U-BL-QJ-D03	Stator 3x400VAC, Sin/Cos 1Vpp, KTY on power connector	0150-2710

CONNECTOR PS10-70x240U-BL-QJ

Motor Connector Wiring		Connector Encoder J	Wire Color Motor Cable
+5 VDC	Supply	1	red
GND	Supply	2	black
Sense +5V	Supply Sense	3	white
Sense GND	Supply Sense	4	brown
Mot. Link C+	Communication	5	pink
Mot. Link C-	Communication	6	grey
Sin+	Encoder	7	yellow
Sin-	Encoder	8	orange
Cos+	Encoder	9	green
Cos-	Encoder	10	blue
n. c.	n. c.	11	n. c.
n. c.	n. c.	12	n. c.
n. c.	n. c.	13	n. c.
n. c.	n. c.	14	n. c.
n. c.	n. c.	15	n. c.
n. c.	n. c.	16	n. c.
n. c.	n. c.	17	n. c.

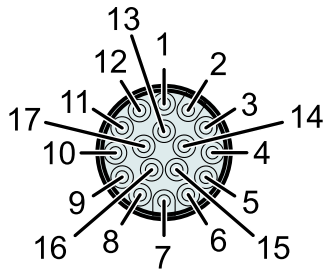

Connector Encoder J

View: Motor connector, plug side

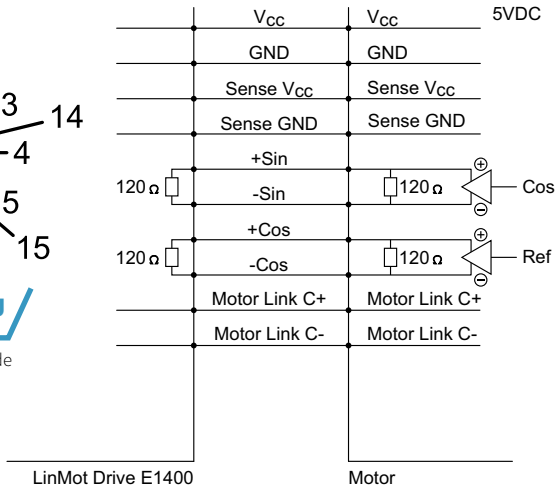

Motor Connector Wiring	Connector Power Q	Wire Color Motor Cable
Phase U	1	red
PE	2	yellow-green
Phase W	3	green
Phase V	4	blue
n. c.	A	n. c.
n. c.	B	n. c.
n. c.	C	n. c.
n. c.	D	n. c.

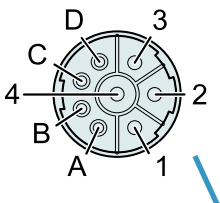

Connector Power Q

View: Motor connector, plug side

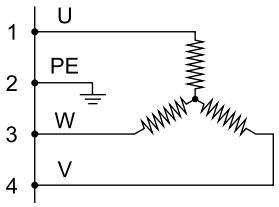

CONNECTOR PS10-70x240U-BL-QJ-D01/02

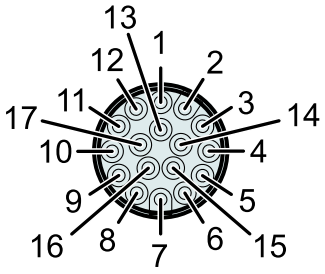

Connector Encoder J

View: Motor connector, plug side

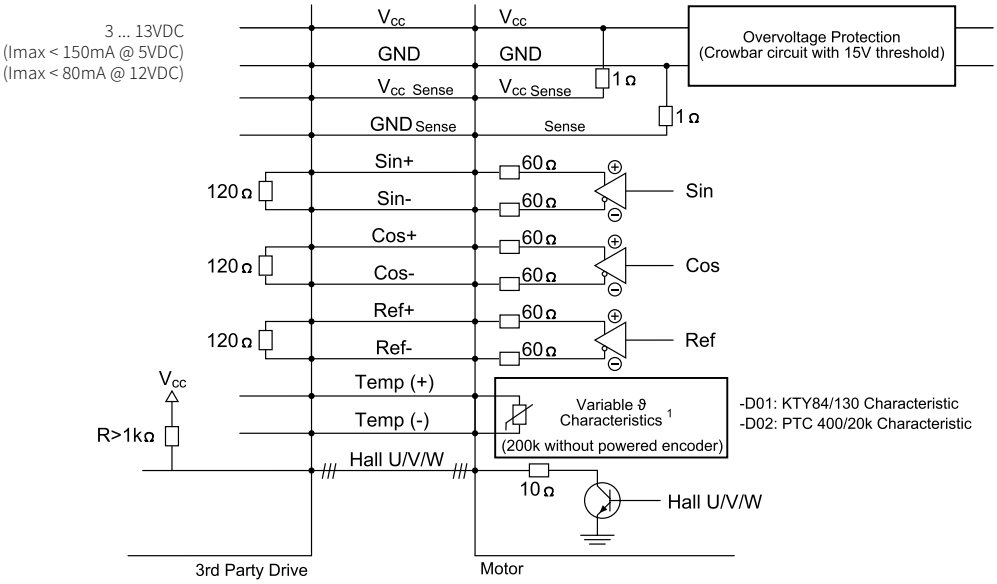

Motor Connector Wiring				
PS10-70x240U-BL-QJ-D01	PS10-70x240U-BL-QJ-D02	Function	Connector Encoder J	Wire Color Motor Cable
3 ... 13 VDC	3 ... 13 VDC	Supply	1	Motor Cable
GND	GND	Supply	2	brown
Vcc Sense (optional)	Vcc Sense (optional)	Supply Sense	3	green
GND Sense (optional)	GND Sense (optional)	Supply Sense	4	yellow
Do not connect	Do not connect	–	5	–
Do not connect	Do not connect	–	6	–
Sin+	Sin+	Encoder 1 Vpp	7	grey
Sin-	Sin-	Encoder 1 Vpp	8	pink
Cos+	Cos+	Encoder 1 Vpp	9	blue
Cos-	Cos-	Encoder 1 Vpp	10	red
Ref+	Ref+	Encoder 1 Vpp	11	black
Ref-	Ref-	Encoder 1 Vpp	12	violett
Hall U	Hall U	Encoder (open collector)	13	grey-red
Hall V	Hall V	Encoder (open collector)	14	red-blue
Hall W	Hall W	Encoder (open collector)	15	white-green
Temp+ (KTY84/130 Char.)	Temp+ (PTC 400/20k Char.)	Temperature[1]	16	yellow-brown
Temp- (KTY84/130 Char.)	Temp- (PTC 400/20k Char.)	Temperature[1]	17	white-yellow

1) The temperature evaluation circiut must be powered from the encoder supply and must be at the same potential. The grounds of the temperature evaluation circuit and the encoder have to be connected. The encoder must have been powered on for at least 50 ms, before valid temperatures can be measured. If the encoder is powered off, 200k Ohms are measured between Pins 16 and 17. The maximum voltage between Pin 16 and 17 must not exceed 16 VDC. The maximum current must not exceed 15 mA.

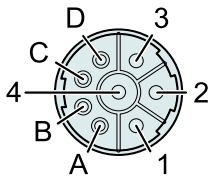

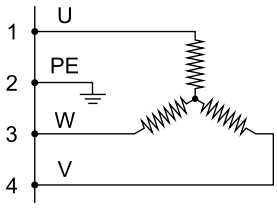

Connector Power Q

View: Motor connector, plug side

Motor Connector Wiring			
PS10-70x240U-BL-QJ-D01	PS10-70x240U-BL-QJ-D02	Connector Power Q	Wire Color Motor Cable
Phase U	Phase U	1	red
PE	PE	2	yel-low-green
Phase W	Phase W	3	green
Phase V	Phase V	4	blue
n. c.	n. c.	A	n. c.
n. c.	n. c.	B	n. c.
n. c.	n. c.	C	n. c.
n. c.	n. c.	D	n. c.

CONNECTOR PS10-70x240U-BL-QJ-D03

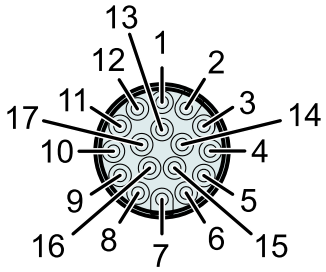

Connector Encoder J

View: Motor connector, plug side

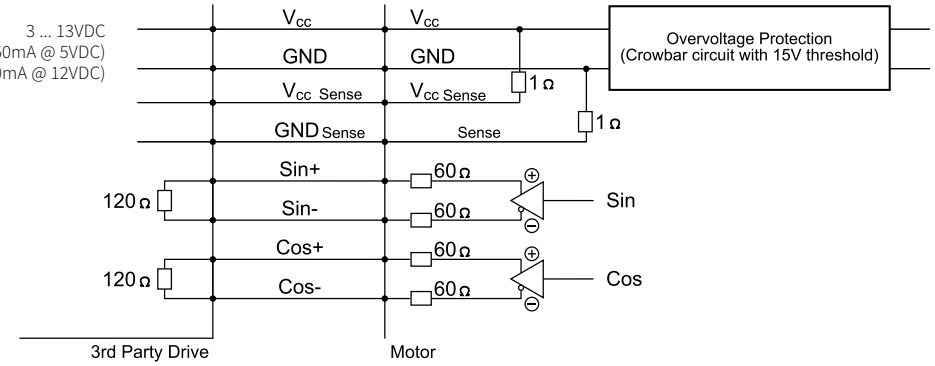

Motor Connector Wiring		Connector Encoder J	Wire Color Motor Cable
3 ... 13 VDC	Supply	1	red
GND	Supply	2	black
Vcc Sense (optional)	Supply Sense	3	white
GND Sense (optional)	Supply Sense	4	brown
Do not connect	–	5	–
Do not connect	–	6	–
Sin+	Encoder 1 Vpp	7	yellow
Sin-	Encoder 1 Vpp	8	orange
Cos+	Encoder 1 Vpp	9	green
Cos-	Encoder 1 Vpp	10	blue
n. c.	–	11	n. c.
n. c.	–	12	n. c.
n. c.	–	13	n. c.
Do not connect	–	14	n. c.
n. c.	–	15	n. c.
n. c.	–	16	n. c.
n. c.	–	17	n. c.

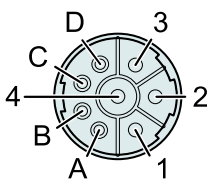

Connector Power Q

View: Motor connector, plug side

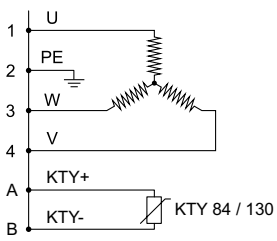

Motor Connector Wiring	Connector Power Q	Wire Color Motor Cable
Phase U	1	red (previously: black 1)
PE	2	yellow-green
Phase W	3	green (previously: black 3)
Phase V	4	blue (previously: black 2)
KTY +	A	purple (previously: black 5)
KTY -	B	grey (previously: black 6)
n. c.	C	yellow (previously: black 7)
n. c.	D	brown (previously: black 8)

SLIDER

Slider Standard

Number of grooves determines the slider type
(see chapter 2 / slider) and marks the front end.

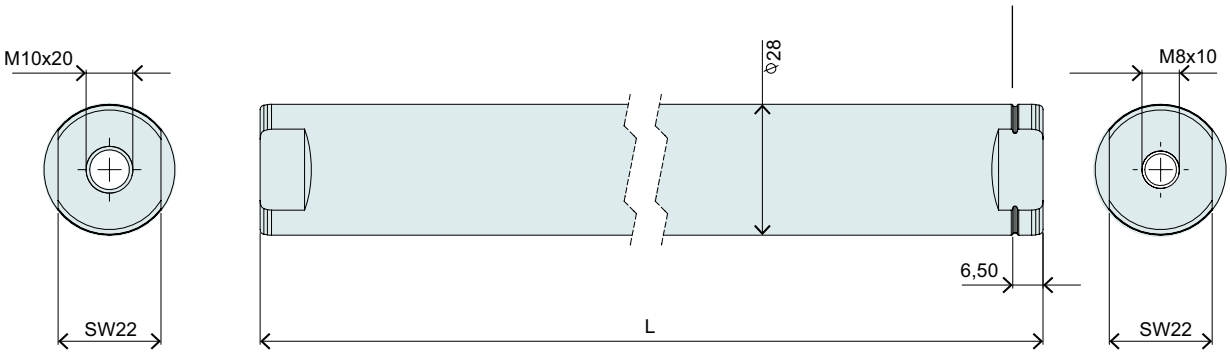

Slider Standard			
Item	Description	Max. Stroke [mm]	Item-No.
PL10-28x390/340	Slider for P10-70 'standard'	10	0150-2194
PL10-28x490/440	Slider for P10-70 'standard'	110	0150-2195
PL10-28x590/540	Slider for P10-70 'standard'	210	0150-2196
PL10-28x690/640	Slider for P10-70 'standard'	310	0150-2197
PL10-28x790/740	Slider for P10-70 'standard'	410	0150-2198
PL10-28x890/840	Slider for P10-70 'standard'	510	0150-2199
PL10-28x990/940	Slider for P10-70 'standard'	610	0150-2203
PL10-28x1190/1140	Slider for P10-70 'standard'	810	0150-2204
PL10-28x1390/1340	Slider for P10-70 'standard'	1010	0150-2205
PL10-28x1590/1540	Slider for P10-70 'standard'	1210	0150-2206
PL10-28x1790/1740	Slider for P10-70 'standard'	1410	0150-2207
PL10-28x1990/1940	Slider for P10-70 'standard'	1610	0150-2208

P10-70x240U/10-BL-QJ

Max. Stroke: 10 mm
Peak Force: 1650 N

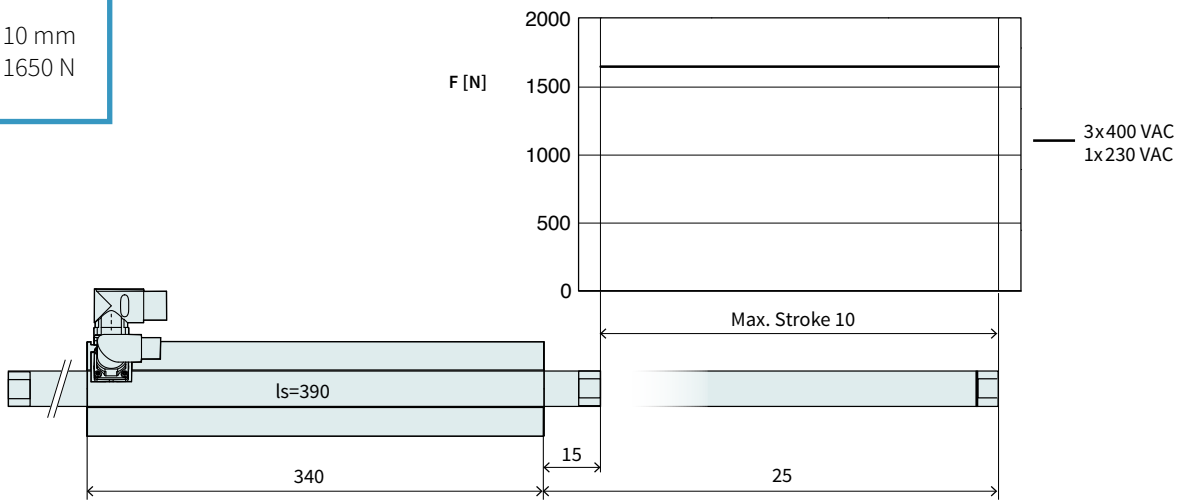

Dimensions in mm

Technical Data P10-70x240U/10				
Stroke				
Max. Stroke	mm	(in)	10	(0.39)
Force				
Max. Force @ 1x230VAC	N	(lbf)	1650	(371)
Max. Force @ 3x400VAC	N	(lbf)	1650	(371)
Max. Cont. Force [Passive cooling/ Fan / Fluid]	N	(lbf)	190 / 290 / 510	(43 / 66 / 120)
Max. Border Force relative	%		100	
Force Constant 1	N/A_{pk}	(lbf/A_{pk})	59	(13.3)
Force Constant 2	N/A_{rms}	(lbf/A_{rms})	83.4	(18.8)
Velocity				
Max. Velocity @ 1x230VAC	m/s	(in/s)	3	(119.9)
Max. Velocity @ 3x400VAC	m/s	(in/s)	5.4	(5.4)
Position Detection				
Repeatability	mm	(in)	±0.05	(±0.002)
Linearity	%		± 5.1	
Electrical Data				
Max. Current @ 1x230VAC	A_{pk} / A_{rms}		27.9 / 19.7	
Max. Current @ 3x400VAC	A_{pk} / A_{rms}		27.9 / 19.7	
Max. Cont. Current 1 [Passive cooling /Fan / Fluid]	A_{pk}		3.3 / 5 / 8.7	
Max. Cont. Current 2 [Passive cooling /Fan / Fluid]	A_{rms}		2.3 / 3.5 / 6.1	
Thermal Data				
Max. Winding Temperature (Sensor)	°C		90	
Thermal Resistance [Passive cooling / Fan / Fluid]	°K/W		0.87 / 0.38 / 0.12	
Thermal Time Constant [Passive cooling / Fan / Fluid]	s		2100 / 510 / 110	
Mechanical Data				
Slider Length	mm	(in)	390	(15)
Slider Mass	g	(lb)	1830	(4.03)

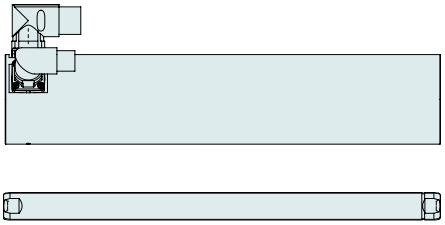

Item	Description	Item-No.
PS10-70x240U-BL-QJ	Stator 3x400VAC, LinMot Encoder	0150-1293
PS10-70x240U-BL-QJ-D01	Stator 3x400VAC, Sin/Cos Encoder 1Vpp, KTY	0150-2284
PS10-70x240U-BL-QJ-D02	Stator 3x400VAC, Sin/Cos Encoder 1Vpp, PTC	0150-2362
PS10-70x240U-BL-QJ-D03	Stator 3x400VAC, Sin/Cos 1Vpp, KTY on power connector	0150-2710
PL10-28x390/340	Slider for P10-70 'standard'	0150-2194

P10-70x240U/110-BL-QJ

Max. Stroke: 110 mm
Peak Force: 1650 N

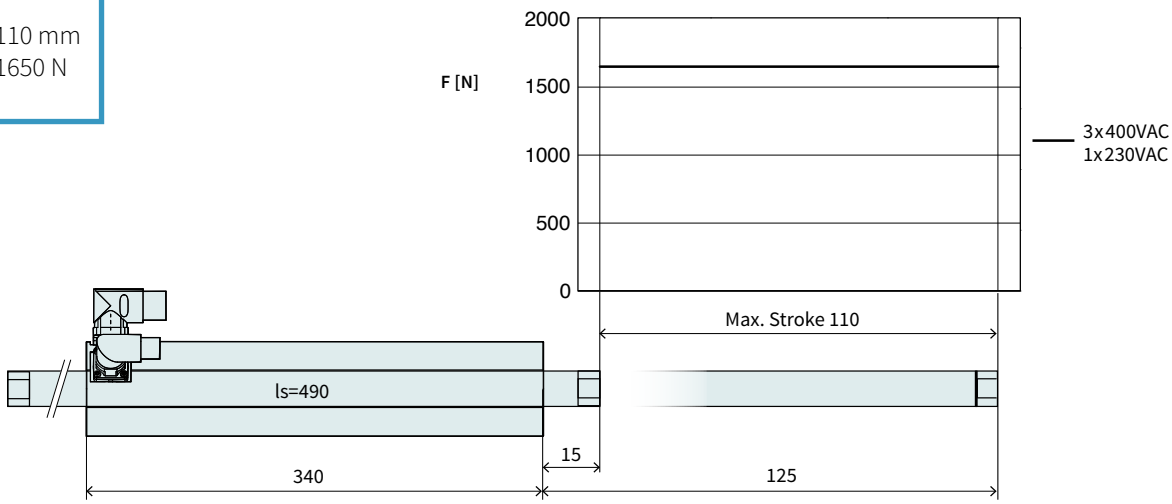

Dimensions in mm

Technical Data P10-70x240U/110				
Stroke				
Max. Stroke	mm	(in)	110	(4.32)
Force				
Max. Force @ 1x230VAC	N	(lbf)	1650	(371)
Max. Force @ 3x400VAC	N	(lbf)	1650	(371)
Max. Cont. Force [Passive cooling/ Fan / Fluid]	N	(lbf)	190 / 290 / 510	(43 / 66 / 120)
Max. Border Force relative	%		100	
Force Constant 1	N/A_{pk}	(lbf/A_{pk})	59	(13.3)
Force Constant 2	N/A_{rms}	(lbf/A_{rms})	83.4	(18.8)
Velocity				
Max. Velocity @ 1x230VAC	m/s	(in/s)	3	(119.9)
Max. Velocity @ 3x400VAC	m/s	(in/s)	5.4	(5.4)
Position Detection				
Repeatability	mm	(in)	±0.05	(±0.002)
Linearity	%		± 0.55	
Electrical Data				
Max. Current @ 1x230VAC	A_{pk} / A_{rms}		27.9 / 19.7	
Max. Current @ 3x400VAC	A_{pk} / A_{rms}		27.9 / 19.7	
Max. Cont. Current 1 [Passive cooling /Fan / Fluid]	A_{pk}		3.3 / 5 / 8.7	
Max. Cont. Current 2 [Passive cooling /Fan / Fluid]	A_{rms}		2.3 / 3.5 / 6.1	
Thermal Data				
Max. Winding Temperature (Sensor)	°C		90	
Thermal Resistance [Passive cooling / Fan / Fluid]	°K/W		0.87 / 0.38 / 0.12	
Thermal Time Constant [Passive cooling / Fan / Fluid]	s		2100 / 510 / 110	
Mechanical Data				
Slider Length	mm	(in)	490	(19)
Slider Mass	g	(lb)	2300	(5.06)

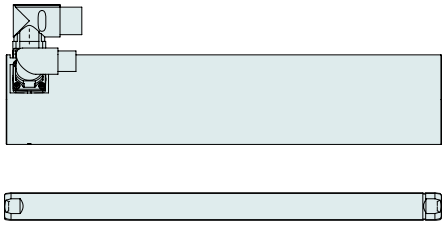

Item	Description	Item-No.
PS10-70x240U-BL-QJ	Stator 3x400VAC, LinMot Encoder	0150-1293
PS10-70x240U-BL-QJ-D01	Stator 3x400VAC, Sin/Cos Encoder 1Vpp, KTY	0150-2284
PS10-70x240U-BL-QJ-D02	Stator 3x400VAC, Sin/Cos Encoder 1Vpp, PTC	0150-2362
PS10-70x240U-BL-QJ-D03	Stator 3x400VAC, Sin/Cos 1Vpp, KTY on power connector	0150-2710
PL10-28x490/440	Slider for P10-70 'standard'	0150-2195

P10-70x240U/210-BL-QJ

Max. Stroke: 210 mm
Peak Force: 1650 N

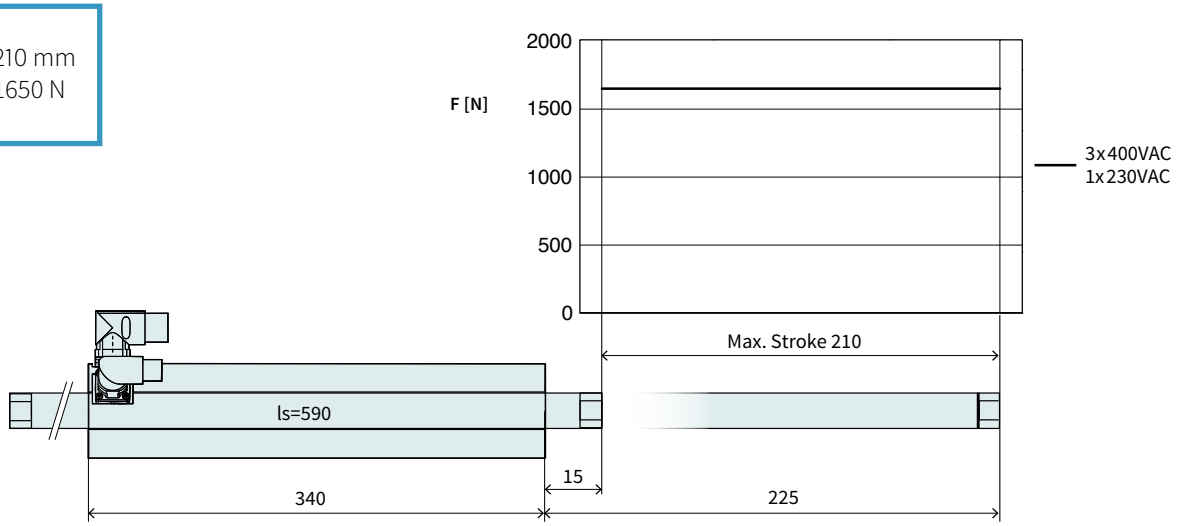

Dimensions in mm

Technical Data P10-70x240U/210				
Stroke				
Max. Stroke	mm	(in)	210	(8.26)
Force				
Max. Force @ 1x230VAC	N	(lbf)	1650	(371)
Max. Force @ 3x400VAC	N	(lbf)	1650	(371)
Max. Cont. Force [Passive cooling/ Fan / Fluid]	N	(lbf)	190 / 290 / 510	(43 / 66 / 120)
Max. Border Force relative	%		100	
Force Constant 1	N/A_{pk}	(lbf/A_{pk})	59	(13.3)
Force Constant 2	N/A_{rms}	(lbf/A_{rms})	83.4	(18.8)
Velocity				
Max. Velocity @ 1x230VAC	m/s	(in/s)	3	(119.9)
Max. Velocity @ 3x400VAC	m/s	(in/s)	5.4	(5.4)
Position Detection				
Repeatability	mm	(in)	±0.05	(±0.002)
Linearity	%		± 0.35	
Electrical Data				
Max. Current @ 1x230VAC	A_{pk} / A_{rms}		27.9 / 19.7	
Max. Current @ 3x400VAC	A_{pk} / A_{rms}		27.9 / 19.7	
Max. Cont. Current 1 [Passive cooling /Fan / Fluid]	A_{pk}		3.3 / 5 / 8.7	
Max. Cont. Current 2 [Passive cooling /Fan / Fluid]	A_{rms}		2.3 / 3.5 / 6.1	
Thermal Data				
Max. Winding Temperature (Sensor)	°C		90	
Thermal Resistance [Passive cooling / Fan / Fluid]	°K/W		0.87 / 0.38 / 0.12	
Thermal Time Constant [Passive cooling / Fan / Fluid]	s		2100 / 510 / 110	
Mechanical Data				
Slider Length	mm	(in)	590	(23)
Slider Mass	g	(lb)	2770	(6.09)

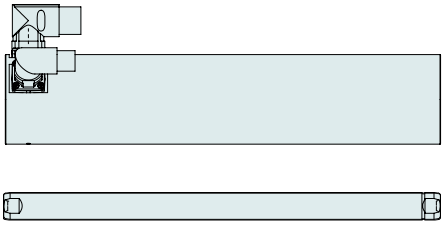

Item	Description	Item-No.
PS10-70x240U-BL-QJ	Stator 3x400VAC, LinMot Encoder	0150-1293
PS10-70x240U-BL-QJ-D01	Stator 3x400VAC, Sin/Cos Encoder 1Vpp, KTY	0150-2284
PS10-70x240U-BL-QJ-D02	Stator 3x400VAC, Sin/Cos Encoder 1Vpp, PTC	0150-2362
PS10-70x240U-BL-QJ-D03	Stator 3x400VAC, Sin/Cos 1Vpp, KTY on power connector	0150-2710
PL10-28x590/540	Slider for P10-70 'standard'	0150-2196

P10-70x240U/310-BL-QJ

Max. Stroke: 310 mm
Peak Force: 1650 N

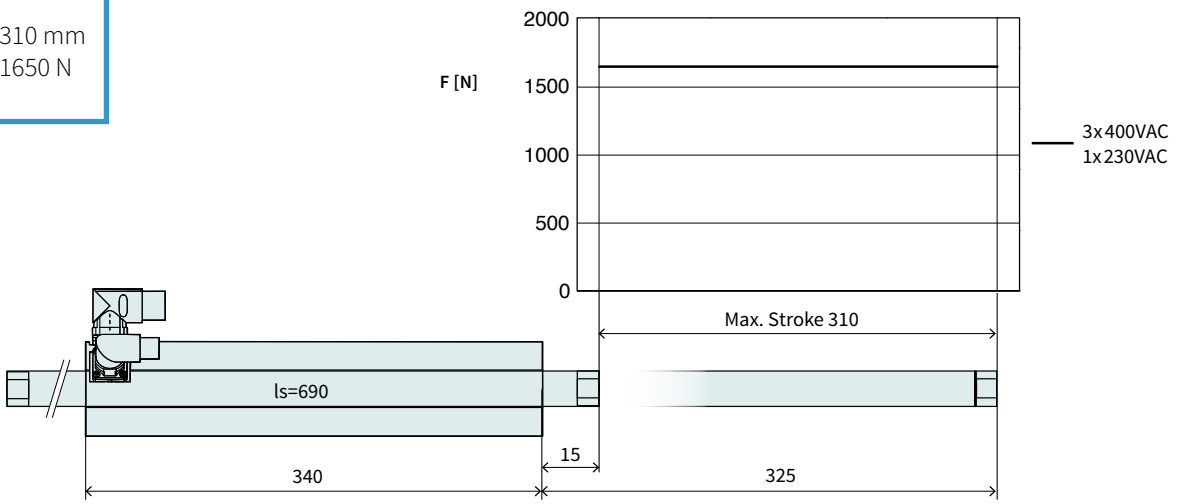

Dimensions in mm

Technical Data P10-70x240U/310				
Stroke				
Max. Stroke	mm	(in)	310	(12.19)
Force				
Max. Force @ 1x230VAC	N	(lbf)	1650	(371)
Max. Force @ 3x400VAC	N	(lbf)	1650	(371)
Max. Cont. Force [Passive cooling/ Fan / Fluid]	N	(lbf)	190 / 290 / 510	(43 / 66 / 120)
Max. Border Force relative	%		100	
Force Constant 1	N/A_{pk}	(lbf/A_{pk})	59	(13.3)
Force Constant 2	N/A_{rms}	(lbf/A_{rms})	83.4	(18.8)
Velocity				
Max. Velocity @ 1x230VAC	m/s	(in/s)	3	(119.9)
Max. Velocity @ 3x400VAC	m/s	(in/s)	5.4	(5.4)
Position Detection				
Repeatability	mm	(in)	±0.05	(±0.002)
Linearity	%		± 0.25	
Electrical Data				
Max. Current @ 1x230VAC	A_{pk} / A_{rms}		27.9 / 19.7	
Max. Current @ 3x400VAC	A_{pk} / A_{rms}		27.9 / 19.7	
Max. Cont. Current 1 [Passive cooling /Fan / Fluid]	A_{pk}		3.3 / 5 / 8.7	
Max. Cont. Current 2 [Passive cooling /Fan / Fluid]	A_{rms}		2.3 / 3.5 / 6.1	
Thermal Data				
Max. Winding Temperature (Sensor)	°C		90	
Thermal Resistance [Passive cooling / Fan / Fluid]	°K/W		0.87 / 0.38 / 0.12	
Thermal Time Constant [Passive cooling / Fan / Fluid]	s		2100 / 510 / 110	
Mechanical Data				
Slider Length	mm	(in)	690	(27)
Slider Mass	g	(lb)	3240	(7.13)

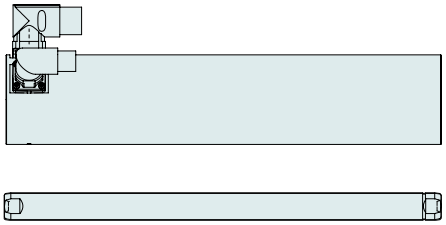

Item	Description	Item-No.
PS10-70x240U-BL-QJ	Stator 3x400VAC, LinMot Encoder	0150-1293
PS10-70x240U-BL-QJ-D01	Stator 3x400VAC, Sin/Cos Encoder 1Vpp, KTY	0150-2284
PS10-70x240U-BL-QJ-D02	Stator 3x400VAC, Sin/Cos Encoder 1Vpp, PTC	0150-2362
PS10-70x240U-BL-QJ-D03	Stator 3x400VAC, Sin/Cos 1Vpp, KTY on power connector	0150-2710
PL10-28x690/640	Slider for P10-70 'standard'	0150-2197

P10-70x240U/410-BL-QJ

4

Max. Stroke: 410 mm
Peak Force: 1650 N

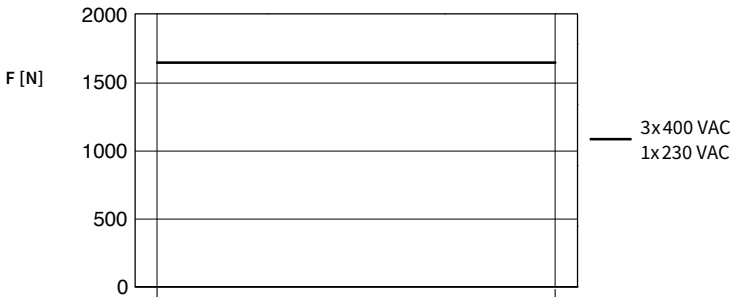

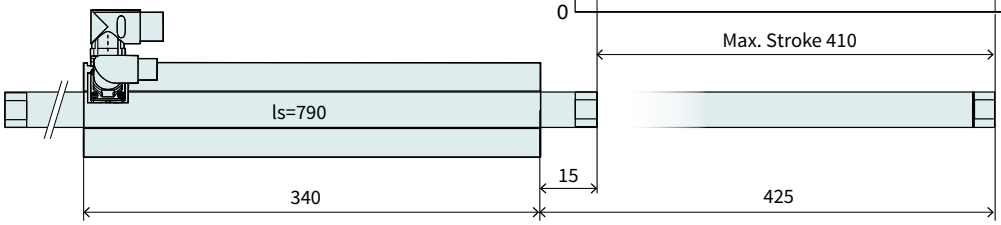

Dimensions in mm

Technical Data P10-70x240U/410				
Stroke				
Max. Stroke	mm	(in)	410	(16.1)
Force				
Max. Force @ 1x230VAC	N	(lbf)	1650	(371)
Max. Force @ 3x400VAC	N	(lbf)	1650	(371)
Max. Cont. Force [Passive cooling/ Fan / Fluid]	N	(lbf)	190 / 290 / 510	(43 / 66 / 120)
Max. Border Force relative	%		100	
Force Constant 1	N/A_{pk}	(lbf/A_{pk})	59	(13.3)
Force Constant 2	N/A_{rms}	(lbf/A_{rms})	83.4	(18.8)
Velocity				
Max. Velocity @ 1x230VAC	m/s	(in/s)	3	(119.9)
Max. Velocity @ 3x400VAC	m/s	(in/s)	5.4	(5.4)
Position Detection				
Repeatability	mm	(in)	±0.05	(±0.002)
Linearity	%		± 0.2	
Electrical Data				
Max. Current @ 1x230VAC	A_{pk} / A_{rms}		27.9 / 19.7	
Max. Current @ 3x400VAC	A_{pk} / A_{rms}		27.9 / 19.7	
Max. Cont. Current 1 [Passive cooling /Fan / Fluid]	A_{pk}		3.3 / 5 / 8.7	
Max. Cont. Current 2 [Passive cooling /Fan / Fluid]	A_{rms}		2.3 / 3.5 / 6.1	
Thermal Data				
Max. Winding Temperature (Sensor)	°C		90	
Thermal Resistance [Passive cooling / Fan / Fluid]	°K/W		0.87 / 0.38 / 0.12	
Thermal Time Constant [Passive cooling / Fan / Fluid]	s		2100 / 510 / 110	
Mechanical Data				
Slider Length	mm	(in)	790	(31)
Slider Mass	g	(lb)	3710	(8.16)

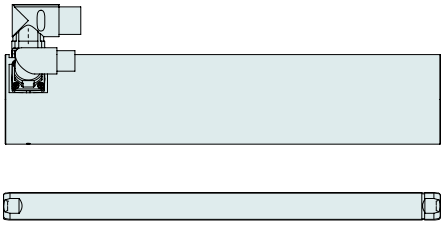

Item	Description	Item-No.
PS10-70x240U-BL-QJ	Stator 3x400VAC, LinMot Encoder	0150-1293
PS10-70x240U-BL-QJ-D01	Stator 3x400VAC, Sin/Cos Encoder 1Vpp, KTY	0150-2284
PS10-70x240U-BL-QJ-D02	Stator 3x400VAC, Sin/Cos Encoder 1Vpp, PTC	0150-2362
PS10-70x240U-BL-QJ-D03	Stator 3x400VAC, Sin/Cos 1Vpp, KTY on power connector	0150-2710
PL10-28x790/740	Slider for P10-70 'standard'	0150-2198

P10-70x240U/510-BL-QJ

Max. Stroke: 510 mm
Peak Force: 1650 N

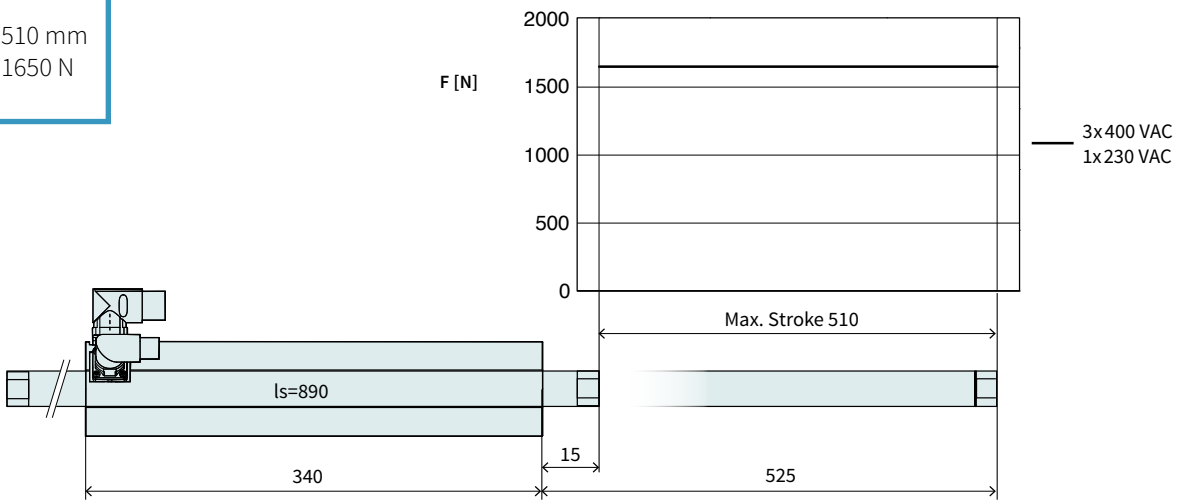

Dimensions in mm

Technical Data P10-70x240U/510				
Stroke				
Max. Stroke	mm	(in)	510	(20.1)
Force				
Max. Force @ 1x230VAC	N	(lbf)	1650	(371)
Max. Force @ 3x400VAC	N	(lbf)	1650	(371)
Max. Cont. Force [Passive cooling/ Fan / Fluid]	N	(lbf)	190 / 290 / 510	(43 / 66 / 120)
Max. Border Force relative	%		100	
Force Constant 1	N/A_{pk}	(lbf/A_{pk})	59	(13.3)
Force Constant 2	N/A_{rms}	(lbf/A_{rms})	83.4	(18.8)
Velocity				
Max. Velocity @ 1x230VAC	m/s	(in/s)	3	(119.9)
Max. Velocity @ 3x400VAC	m/s	(in/s)	5.4	(5.4)
Position Detection				
Repeatability	mm	(in)	±0.05	(±0.002)
Linearity	%		± 0.2	
Electrical Data				
Max. Current @ 1x230VAC	A_{pk} / A_{rms}		27.9 / 19.7	
Max. Current @ 3x400VAC	A_{pk} / A_{rms}		27.9 / 19.7	
Max. Cont. Current 1 [Passive cooling /Fan / Fluid]	A_{pk}		3.3 / 5 / 8.7	
Max. Cont. Current 2 [Passive cooling /Fan / Fluid]	A_{rms}		2.3 / 3.5 / 6.1	
Thermal Data				
Max. Winding Temperature (Sensor)	°C		90	
Thermal Resistance [Passive cooling / Fan / Fluid]	°K/W		0.87 / 0.38 / 0.12	
Thermal Time Constant [Passive cooling / Fan / Fluid]	s		2100 / 510 / 110	
Mechanical Data				
Slider Length	mm	(in)	890	(35)
Slider Mass	g	(lb)	4180	(9.2)

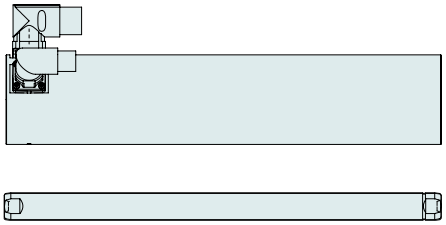

Item	Description	Item-No.
PS10-70x240U-BL-QJ	Stator 3x400VAC, LinMot Encoder	0150-1293
PS10-70x240U-BL-QJ-D01	Stator 3x400VAC, Sin/Cos Encoder 1Vpp, KTY	0150-2284
PS10-70x240U-BL-QJ-D02	Stator 3x400VAC, Sin/Cos Encoder 1Vpp, PTC	0150-2362
PS10-70x240U-BL-QJ-D03	Stator 3x400VAC, Sin/Cos 1Vpp, KTY on power connector	0150-2710
PL10-28x890/840	Slider for P10-70 'standard'	0150-2199

P10-70x240U/610-BL-QJ

Max. Stroke: 610 mm
Peak Force: 1650 N

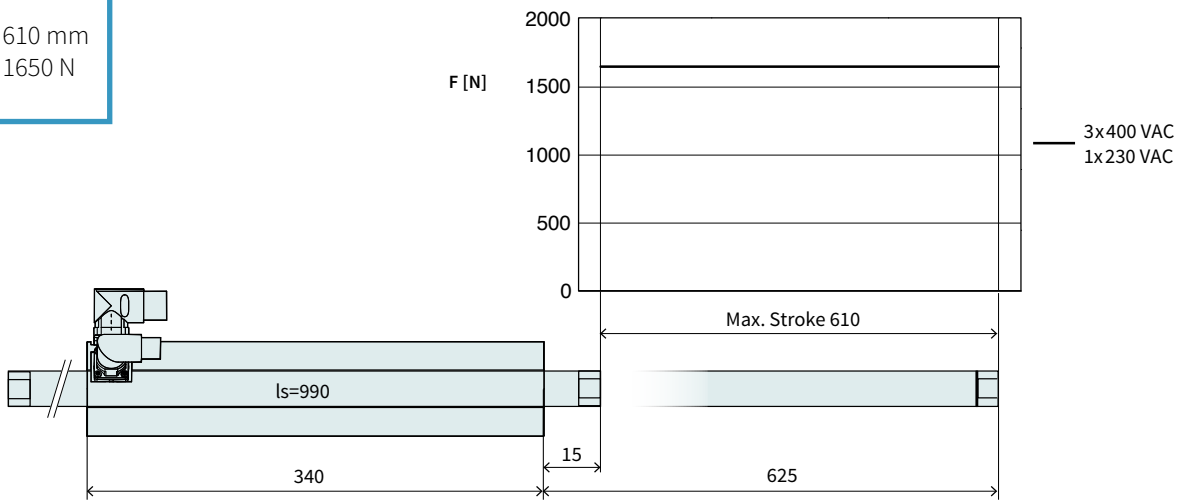

Dimensions in mm

Technical Data P10-70x240U/610				
Stroke				
Max. Stroke	mm	(in)	610	(23.99)
Force				
Max. Force @ 1x230VAC	N	(lbf)	1650	(371)
Max. Force @ 3x400VAC	N	(lbf)	1650	(371)
Max. Cont. Force [Passive cooling/ Fan / Fluid]	N	(lbf)	190 / 290 / 510	(43 / 66 / 120)
Max. Border Force relative	%		100	
Force Constant 1	N/A_{pk}	(lbf/A_{pk})	59	(13.3)
Force Constant 2	N/A_{rms}	(lbf/A_{rms})	83.4	(18.8)
Velocity				
Max. Velocity @ 1x230VAC	m/s	(in/s)	3	(119.9)
Max. Velocity @ 3x400VAC	m/s	(in/s)	5.4	(5.4)
Position Detection				
Repeatability	mm	(in)	±0.05	(±0.002)
Linearity	%		± 0.2	
Electrical Data				
Max. Current @ 1x230VAC	A_{pk} / A_{rms}		27.9 / 19.7	
Max. Current @ 3x400VAC	A_{pk} / A_{rms}		27.9 / 19.7	
Max. Cont. Current 1 [Passive cooling /Fan / Fluid]	A_{pk}		3.3 / 5 / 8.7	
Max. Cont. Current 2 [Passive cooling /Fan / Fluid]	A_{rms}		2.3 / 3.5 / 6.1	
Thermal Data				
Max. Winding Temperature (Sensor)	°C		90	
Thermal Resistance [Passive cooling / Fan / Fluid]	°K/W		0.87 / 0.38 / 0.12	
Thermal Time Constant [Passive cooling / Fan / Fluid]	s		2100 / 510 / 110	
Mechanical Data				
Slider Length	mm	(in)	990	(39)
Slider Mass	g	(lb)	4650	(10.23)

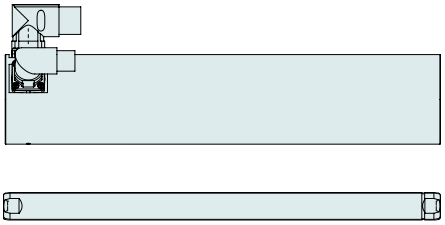

Item	Description	Item-No.
PS10-70x240U-BL-QJ	Stator 3x400VAC, LinMot Encoder	0150-1293
PS10-70x240U-BL-QJ-D01	Stator 3x400VAC, Sin/Cos Encoder 1Vpp, KTY	0150-2284
PS10-70x240U-BL-QJ-D02	Stator 3x400VAC, Sin/Cos Encoder 1Vpp, PTC	0150-2362
PS10-70x240U-BL-QJ-D03	Stator 3x400VAC, Sin/Cos 1Vpp, KTY on power connector	0150-2710
PL10-28x990/940	Slider for P10-70 'standard'	0150-2203

P10-70x240U/810-BL-QJ

Max. Stroke: 810 mm
Peak Force: 1650 N

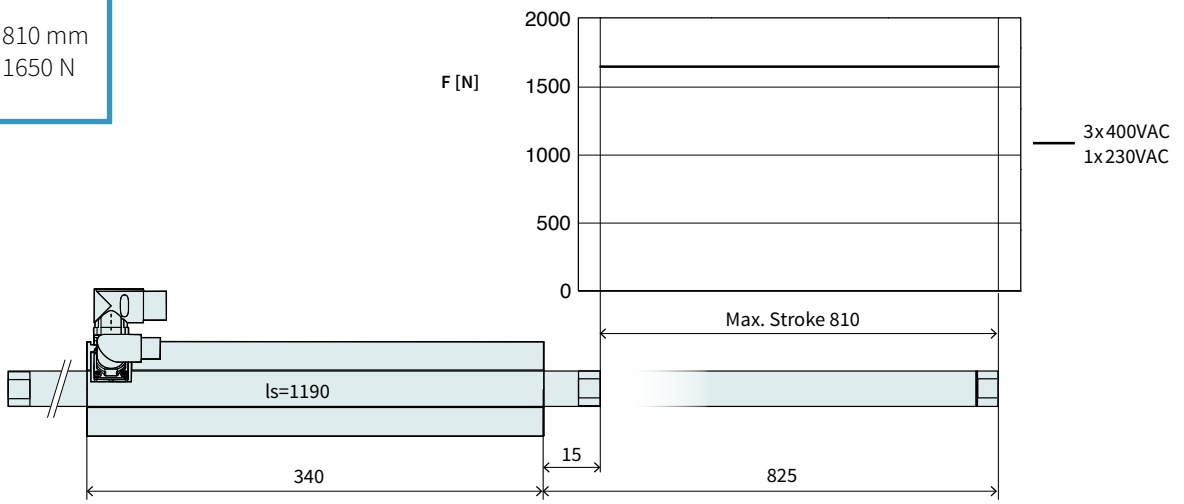

Dimensions in mm

Technical Data P10-70x240U/810				
Stroke				
Max. Stroke	mm	(in)	810	(31.89)
Force				
Max. Force @ 1x230VAC	N	(lbf)	1650	(371)
Max. Force @ 3x400VAC	N	(lbf)	1650	(371)
Max. Cont. Force [Passive cooling/ Fan / Fluid]	N	(lbf)	190 / 290 / 510	(43 / 66 / 120)
Max. Border Force relative	%		100	
Force Constant 1	N/A_{pk}	(lbf/A_{pk})	59	(13.3)
Force Constant 2	N/A_{rms}	(lbf/A_{rms})	83.4	(18.8)
Velocity				
Max. Velocity @ 1x230VAC	m/s	(in/s)	3	(119.9)
Max. Velocity @ 3x400VAC	m/s	(in/s)	5.4	(5.4)
Position Detection				
Repeatability	mm	(in)	±0.05	(±0.002)
Linearity	%		± 0.15	
Electrical Data				
Max. Current @ 1x230VAC	A_{pk} / A_{rms}		27.9 / 19.7	
Max. Current @ 3x400VAC	A_{pk} / A_{rms}		27.9 / 19.7	
Max. Cont. Current 1 [Passive cooling /Fan / Fluid]	A_{pk}		3.3 / 5 / 8.7	
Max. Cont. Current 2 [Passive cooling /Fan / Fluid]	A_{rms}		2.3 / 3.5 / 6.1	
Thermal Data				
Max. Winding Temperature (Sensor)	°C		90	
Thermal Resistance [Passive cooling / Fan / Fluid]	°K/W		0.87 / 0.38 / 0.12	
Thermal Time Constant [Passive cooling / Fan / Fluid]	s		2100 / 510 / 110	
Mechanical Data				
Slider Length	mm	(in)	1190	(47)
Slider Mass	g	(lb)	5590	(12.3)

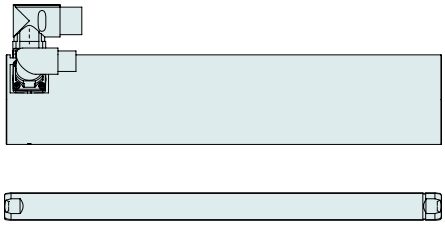

Item	Description	Item-No.
PS10-70x240U-BL-QJ	Stator 3x400VAC, LinMot Encoder	0150-1293
PS10-70x240U-BL-QJ-D01	Stator 3x400VAC, Sin/Cos Encoder 1Vpp, KTY	0150-2284
PS10-70x240U-BL-QJ-D02	Stator 3x400VAC, Sin/Cos Encoder 1Vpp, PTC	0150-2362
PS10-70x240U-BL-QJ-D03	Stator 3x400VAC, Sin/Cos 1Vpp, KTY on power connector	0150-2710
PL10-28x1190/1140	Slider for P10-70 'standard'	0150-2204

P10-70x240U/1010-BL-QJ

4

Max. Stroke: 1010 mm
Peak Force: 1650 N

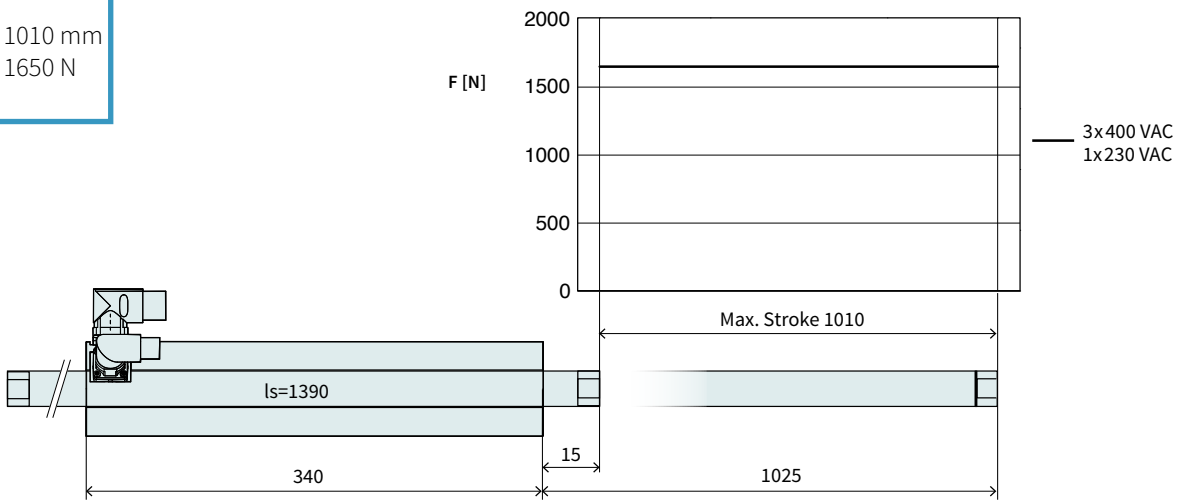

Dimensions in mm

Technical Data P10-70x240U/1010				
Stroke				
Max. Stroke	mm	(in)	1010	(39.79)
Force				
Max. Force @ 1x230VAC	N	(lbf)	1650	(371)
Max. Force @ 3x400VAC	N	(lbf)	1650	(371)
Max. Cont. Force [Passive cooling/ Fan / Fluid]	N	(lbf)	190 / 290 / 510	(43 / 66 / 120)
Max. Border Force relative	%		100	
Force Constant 1	N/A_{pk}	(lbf/A_{pk})	59	(13.3)
Force Constant 2	N/A_{rms}	(lbf/A_{rms})	83.4	(18.8)
Velocity				
Max. Velocity @ 1x230VAC	m/s	(in/s)	3	(119.9)
Max. Velocity @ 3x400VAC	m/s	(in/s)	5.4	(5.4)
Position Detection				
Repeatability	mm	(in)	±0.05	(±0.002)
Linearity	%		± 0.15	
Electrical Data				
Max. Current @ 1x230VAC	A_{pk} / A_{rms}		27.9 / 19.7	
Max. Current @ 3x400VAC	A_{pk} / A_{rms}		27.9 / 19.7	
Max. Cont. Current 1 [Passive cooling /Fan / Fluid]	A_{pk}		3.3 / 5 / 8.7	
Max. Cont. Current 2 [Passive cooling /Fan / Fluid]	A_{rms}		2.3 / 3.5 / 6.1	
Thermal Data				
Max. Winding Temperature (Sensor)	°C		90	
Thermal Resistance [Passive cooling / Fan / Fluid]	°K/W		0.87 / 0.38 / 0.12	
Thermal Time Constant [Passive cooling / Fan / Fluid]	s		2100 / 510 / 110	
Mechanical Data				
Slider Length	mm	(in)	1390	(55)
Slider Mass	g	(lb)	6530	(14.37)

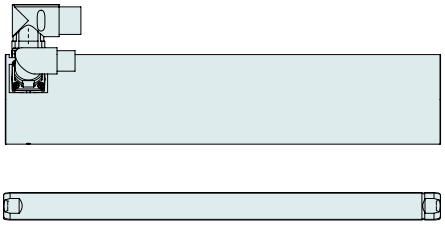

Item	Description	Item-No.
PS10-70x240U-BL-QJ	Stator 3x400VAC, LinMot Encoder	0150-1293
PS10-70x240U-BL-QJ-D01	Stator 3x400VAC, Sin/Cos Encoder 1Vpp, KTY	0150-2284
PS10-70x240U-BL-QJ-D02	Stator 3x400VAC, Sin/Cos Encoder 1Vpp, PTC	0150-2362
PS10-70x240U-BL-QJ-D03	Stator 3x400VAC, Sin/Cos 1Vpp, KTY on power connector	0150-2710
PL10-28x1390/1340	Slider for P10-70 'standard'	0150-2205

P10-70x240U/1210-BL-QJ

Max. Stroke: 1210 mm
Peak Force: 1650 N

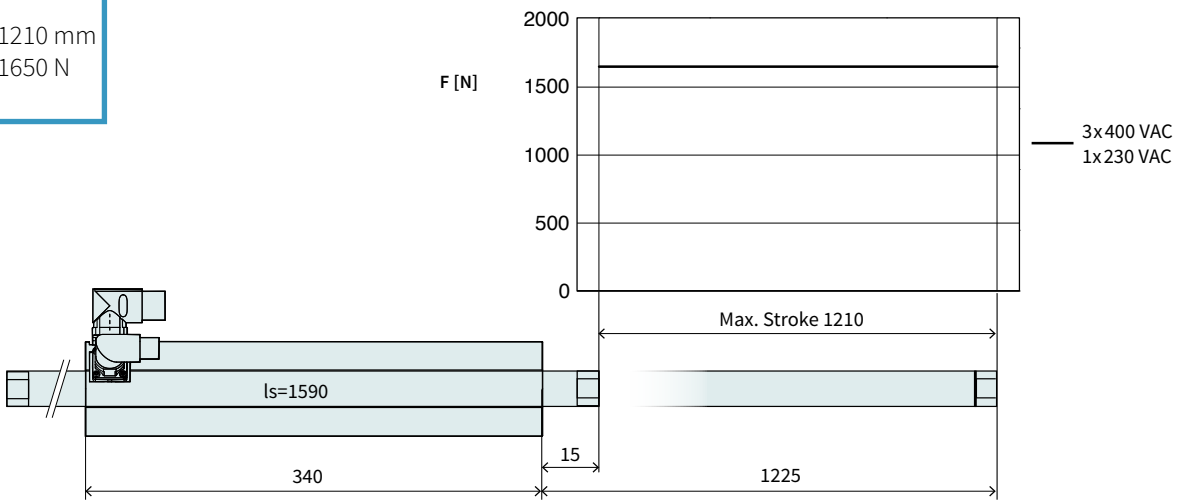

Dimensions in mm

Technical Data P10-70x240U/1210				
Stroke				
Max. Stroke	mm	(in)	1210	(47.6)
Force				
Max. Force @ 1x230VAC	N	(lbf)	1650	(371)
Max. Force @ 3x400VAC	N	(lbf)	1650	(371)
Max. Cont. Force [Passive cooling/ Fan / Fluid]	N	(lbf)	190 / 290 / 510	(43 / 66 / 120)
Max. Border Force relative	%		100	
Force Constant 1	N/A_{pk}	(lbf/A_{pk})	59	(13.3)
Force Constant 2	N/A_{rms}	(lbf/A_{rms})	83.4	(18.8)
Velocity				
Max. Velocity @ 1x230VAC	m/s	(in/s)	3	(119.9)
Max. Velocity @ 3x400VAC	m/s	(in/s)	5.4	(5.4)
Position Detection				
Repeatability	mm	(in)	±0.05	(±0.002)
Linearity	%		± 0.15	
Electrical Data				
Max. Current @ 1x230VAC	A_{pk} / A_{rms}		27.9 / 19.7	
Max. Current @ 3x400VAC	A_{pk} / A_{rms}		27.9 / 19.7	
Max. Cont. Current 1 [Passive cooling /Fan / Fluid]	A_{pk}		3.3 / 5 / 8.7	
Max. Cont. Current 2 [Passive cooling /Fan / Fluid]	A_{rms}		2.3 / 3.5 / 6.1	
Thermal Data				
Max. Winding Temperature (Sensor)	°C		90	
Thermal Resistance [Passive cooling / Fan / Fluid]	°K/W		0.87 / 0.38 / 0.12	
Thermal Time Constant [Passive cooling / Fan / Fluid]	s		2100 / 510 / 110	
Mechanical Data				
Slider Length	mm	(in)	1590	(63)
Slider Mass	g	(lb)	7470	(16.43)

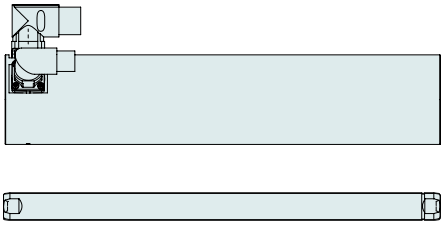

Item	Description	Item-No.
PS10-70x240U-BL-QJ	Stator 3x400VAC, LinMot Encoder	0150-1293
PS10-70x240U-BL-QJ-D01	Stator 3x400VAC, Sin/Cos Encoder 1Vpp, KTY	0150-2284
PS10-70x240U-BL-QJ-D02	Stator 3x400VAC, Sin/Cos Encoder 1Vpp, PTC	0150-2362
PS10-70x240U-BL-QJ-D03	Stator 3x400VAC, Sin/Cos 1Vpp, KTY on power connector	0150-2710
PL10-28x1590/1540	Slider for P10-70 'standard'	0150-2206

P10-70x240U/1410-BL-QJ

Max. Stroke: 1410 mm
Peak Force: 1650 N

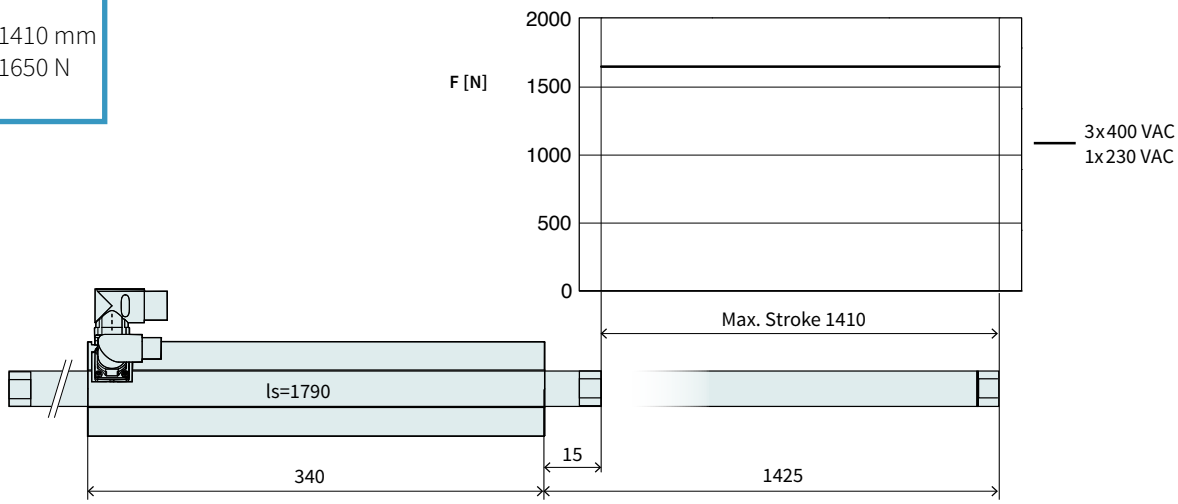

Dimensions in mm

Technical Data P10-70x240U/1410				
Stroke				
Max. Stroke	mm	(in)	1410	(55.49)
Force				
Max. Force @ 1x230VAC	N	(lbf)	1650	(371)
Max. Force @ 3x400VAC	N	(lbf)	1650	(371)
Max. Cont. Force [Passive cooling/ Fan / Fluid]	N	(lbf)	190 / 290 / 510	(43 / 66 / 120)
Max. Border Force relative	%		100	
Force Constant 1	N/A_{pk}	(lbf/A_{pk})	59	(13.3)
Force Constant 2	N/A_{rms}	(lbf/A_{rms})	83.4	(18.8)
Velocity				
Max. Velocity @ 1x230VAC	m/s	(in/s)	3	(119.9)
Max. Velocity @ 3x400VAC	m/s	(in/s)	5.4	(5.4)
Position Detection				
Repeatability	mm	(in)	±0.05	(±0.002)
Linearity	%		± 0.15	
Electrical Data				
Max. Current @ 1x230VAC	A_{pk} / A_{rms}		27.9 / 19.7	
Max. Current @ 3x400VAC	A_{pk} / A_{rms}		27.9 / 19.7	
Max. Cont. Current 1 [Passive cooling /Fan / Fluid]	A_{pk}		3.3 / 5 / 8.7	
Max. Cont. Current 2 [Passive cooling /Fan / Fluid]	A_{rms}		2.3 / 3.5 / 6.1	
Thermal Data				
Max. Winding Temperature (Sensor)	°C		90	
Thermal Resistance [Passive cooling / Fan / Fluid]	°K/W		0.87 / 0.38 / 0.12	
Thermal Time Constant [Passive cooling / Fan / Fluid]	s		2100 / 510 / 110	
Mechanical Data				
Slider Length	mm	(in)	1790	(70)
Slider Mass	g	(lb)	8413	(18.51)

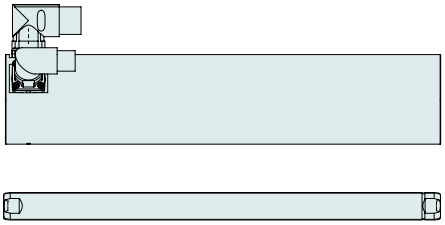

Item	Description	Item-No.
PS10-70x240U-BL-QJ	Stator 3x400VAC, LinMot Encoder	0150-1293
PS10-70x240U-BL-QJ-D01	Stator 3x400VAC, Sin/Cos Encoder 1Vpp, KTY	0150-2284
PS10-70x240U-BL-QJ-D02	Stator 3x400VAC, Sin/Cos Encoder 1Vpp, PTC	0150-2362
PS10-70x240U-BL-QJ-D03	Stator 3x400VAC, Sin/Cos 1Vpp, KTY on power connector	0150-2710
PL10-28x1790/1740	Slider for P10-70 'standard'	0150-2207

P10-70x240U/1610-BL-QJ

Max. Stroke: 1610 mm
Peak Force: 1650 N

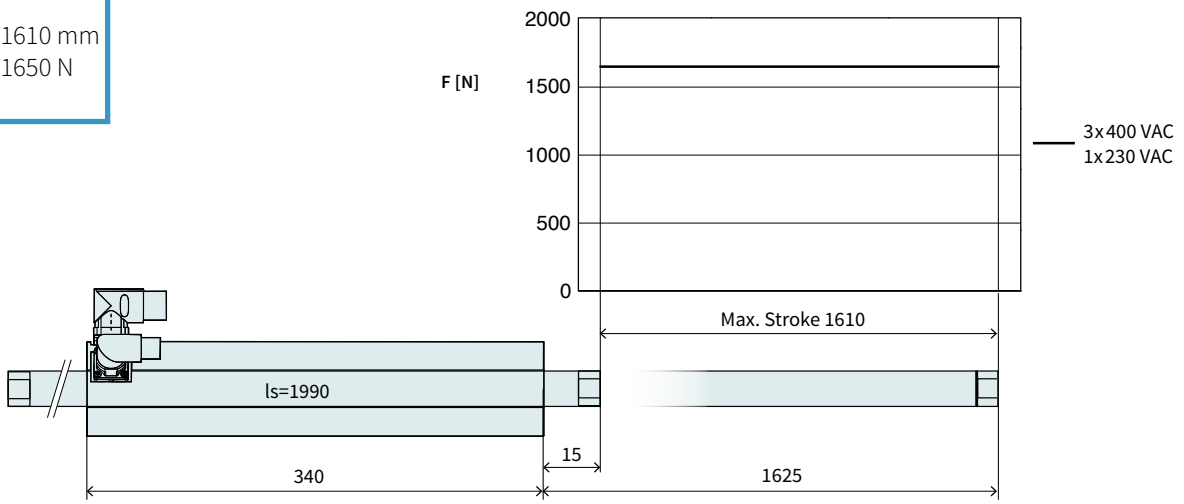

Dimensions in mm

Technical Data P10-70x240U/1610				
Stroke				
Max. Stroke	mm	(in)	1610	(63.39)
Force				
Max. Force @ 1x230VAC	N	(lbf)	1650	(371)
Max. Force @ 3x400VAC	N	(lbf)	1650	(371)
Max. Cont. Force [Passive cooling/ Fan / Fluid]	N	(lbf)	190 / 290 / 510	(43 / 66 / 120)
Max. Border Force relative	%		100	
Force Constant 1	N/A_{pk}	(lbf/A_{pk})	59	(13.3)
Force Constant 2	N/A_{rms}	(lbf/A_{rms})	83.4	(18.8)
Velocity				
Max. Velocity @ 1x230VAC	m/s	(in/s)	3	(119.9)
Max. Velocity @ 3x400VAC	m/s	(in/s)	5.4	(5.4)
Position Detection				
Repeatability	mm	(in)	±0.05	(±0.002)
Linearity	%		± 0.15	
Electrical Data				
Max. Current @ 1x230VAC	A_{pk} / A_{rms}		27.9 / 19.7	
Max. Current @ 3x400VAC	A_{pk} / A_{rms}		27.9 / 19.7	
Max. Cont. Current 1 [Passive cooling /Fan / Fluid]	A_{pk}		3.3 / 5 / 8.7	
Max. Cont. Current 2 [Passive cooling /Fan / Fluid]	A_{rms}		2.3 / 3.5 / 6.1	
Thermal Data				
Max. Winding Temperature (Sensor)	°C		90	
Thermal Resistance [Passive cooling / Fan / Fluid]	°K/W		0.87 / 0.38 / 0.12	
Thermal Time Constant [Passive cooling / Fan / Fluid]	s		2100 / 510 / 110	
Mechanical Data				
Slider Length	mm	(in)	1990	(78)
Slider Mass	g	(lb)	9350	(20.57)

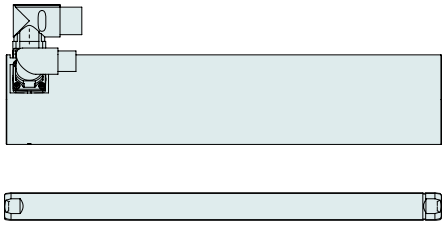

Item	Description	Item-No.
PS10-70x240U-BL-QJ	Stator 3x400VAC, LinMot Encoder	0150-1293
PS10-70x240U-BL-QJ-D01	Stator 3x400VAC, Sin/Cos Encoder 1Vpp, KTY	0150-2284
PS10-70x240U-BL-QJ-D02	Stator 3x400VAC, Sin/Cos Encoder 1Vpp, PTC	0150-2362
PS10-70x240U-BL-QJ-D03	Stator 3x400VAC, Sin/Cos 1Vpp, KTY on power connector	0150-2710
PL10-28x1990/1940	Slider for P10-70 'standard'	0150-2208

Linear Guides H10



HM10-70x240/110	Linear Module 70x240 with 110 mm Stroke		
H-Guide	H10-70x240/110	H-Guide for P10-70x240, Stroke max. 110 mm	0150-5185
Stator	PS10-70x240U-BL-QJ	Stator 3x400VAC, LinMot Encoder	0150-1293
	PS10-70x240U-BL-QJ-D01	Stator 3x400VAC, Sin/Cos Encoder 1Vpp, KTY	0150-2284
	PS10-70x240U-BL-QJ-D02	Stator 3x400VAC, Sin/Cos Encoder 1Vpp, PTC	0150-2362
	PS10-70x240U-BL-QJ-D03	Stator 3x400VAC, Sin/Cos 1Vpp, KTY on power connector	0150-2710
Slider	PL10-28x490/440	Slider for P10-70 'standard'	0150-2195

HM10-70x240/210	Linear Module 70x240 with 210 mm Stroke		
H-Guide	H10-70x240/210	H-Guide for P10-70x240, Stroke max. 210 mm	0150-5400
Stator	PS10-70x240U-BL-QJ	Stator 3x400VAC, LinMot Encoder	0150-1293
	PS10-70x240U-BL-QJ-D01	Stator 3x400VAC, Sin/Cos Encoder 1Vpp, KTY	0150-2284
	PS10-70x240U-BL-QJ-D02	Stator 3x400VAC, Sin/Cos Encoder 1Vpp, PTC	0150-2362
	PS10-70x240U-BL-QJ-D03	Stator 3x400VAC, Sin/Cos 1Vpp, KTY on power connector	0150-2710
Slider	PL10-28x590/540	Slider for P10-70 'standard'	0150-2196

HM10-70x240/310	Linear Module 70x240 with 310 mm Stroke		
H-Guide	H10-70x240/310	H-Guide for P10-70x240, Stroke max. 310 mm	0150-5401
Stator	PS10-70x240U-BL-QJ	Stator 3x400VAC, LinMot Encoder	0150-1293
	PS10-70x240U-BL-QJ-D01	Stator 3x400VAC, Sin/Cos Encoder 1Vpp, KTY	0150-2284
	PS10-70x240U-BL-QJ-D02	Stator 3x400VAC, Sin/Cos Encoder 1Vpp, PTC	0150-2362
	PS10-70x240U-BL-QJ-D03	Stator 3x400VAC, Sin/Cos 1Vpp, KTY on power connector	0150-2710
Slider	PL10-28x690/640	Slider for P10-70 'standard'	0150-2197

FIND MORE PRODUCT DETAILS IN THE CHAPTER "LINEAR GUIDES".

HM10-70x240/410	Linear Module 70x240 with 410 mm Stroke		
H-Guide	H10-70x240/410	H-Guide for P10-70x240, Stroke max. 410 mm	0150-5402
Stator	PS10-70x240U-BL-QJ	Stator 3x400VAC, LinMot Encoder	0150-1293
	PS10-70x240U-BL-QJ-D01	Stator 3x400VAC, Sin/Cos Encoder 1Vpp, KTY	0150-2284
	PS10-70x240U-BL-QJ-D02	Stator 3x400VAC, Sin/Cos Encoder 1Vpp, PTC	0150-2362
	PS10-70x240U-BL-QJ-D03	Stator 3x400VAC, Sin/Cos 1Vpp, KTY on power connector	0150-2710
Slider	PL10-28x790/740	Slider for P10-70 'standard'	0150-2198

HM10-70x240/510	Linear Module 70x240 with 510 mm Stroke		
H-Guide	H10-70x240/510	H-Guide for P10-70x240, Stroke max. 510 mm	0150-5403
Stator	PS10-70x240U-BL-QJ	Stator 3x400VAC, LinMot Encoder	0150-1293
	PS10-70x240U-BL-QJ-D01	Stator 3x400VAC, Sin/Cos Encoder 1Vpp, KTY	0150-2284
	PS10-70x240U-BL-QJ-D02	Stator 3x400VAC, Sin/Cos Encoder 1Vpp, PTC	0150-2362
	PS10-70x240U-BL-QJ-D03	Stator 3x400VAC, Sin/Cos 1Vpp, KTY on power connector	0150-2710
Slider	PL10-28x890/840	Slider for P10-70 'standard'	0150-2199

Accessories			
Fan	HV01-37/48	Fan cooling for H01-37/48 &PF02-37/48	0150-5051

Motor Cable

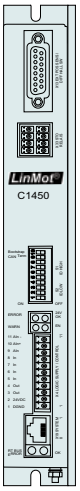

C1400

B Connector MC10-B/m

Q Connector MC10-Q/f

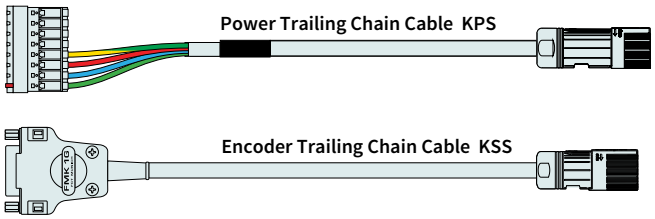



P10-70x240U

D15 Connector MC01-D15/f

J Connector MC10-J/f



E1400

L Connector MC10-L/m

Q Connector MC10-Q/f

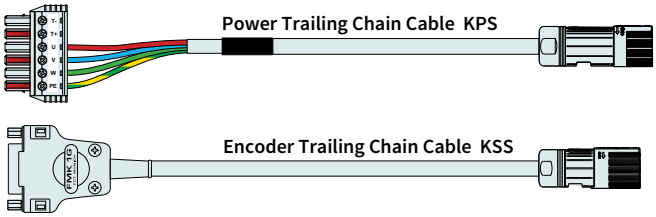



P10-70x240U

D15 Connector MC01-D15/f

J Connector MC10-J/f

ORDERING INFORMATION

TRAILING CHAIN CABLE FOR LINMOT DRIVES		
Item	**Description**	**Item-No.**
KPS15-04-L/Q-3	Power Trailing Chain Cable E1400/P10-70, 3 m	0150-2266
KPS15-04-L/Q-5	Power Trailing Chain Cable E1400/P10-70, 5 m	0150-2261
KPS15-04-L/Q-8	Power Trailing Chain Cable E1400/P10-70, 8 m	0150-2267
KPS15-04-L/Q-12	Power Trailing Chain Cable E1400/P10-70, 12 m	0150-2268
KPS15-04-L/Q-	Power Trailing Chain Cable L/Q-, Custom length	0150-3388
KPS15-04-B/Q-3	Power Trailing Chain Cable C1400/P10-70, 3 m	0150-3660
KPS15-04-B/Q-5	Power Trailing Chain Cable C1400/P10-70, 5 m	0150-3661
KPS15-04-B/Q-8	Power Trailing Chain Cable C1400/P10-70, 8 m	0150-3662
KPS15-04-B/Q-12	Power Trailing Chain Cable C1400/P10-70, 12 m	0150-3663
KPS15-04-B/Q-	Power Trailing Chain Cable B/Q-, Custom length	0150-3608

TRAILING CHAIN CABLE FOR LINMOT DRIVES		
Item	**Description**	**Item-No.**
KSS 05-02/08-D15/J-3	Encoder Trailing Chain Cable D15/J, 3 m	0150-2263
KSS 05-02/08-D15/J-5	Encoder Trailing Chain Cable D15/J, 5 m	0150-2262
KSS 05-02/08-D15/J-8	Encoder Trailing Chain Cable D15/J, 8 m	0150-2264
KSS 05-02/08-D15/J-12	Encoder Trailing Chain Cable D15/J, 12 m	0150-2265
KSS 05-02/08-D15(f)-45°/J-	Encoder Trailing Chain Cable D15/J-, Custom length	0150-3389

TRAILING CHAIN CABLE FOR STATOR SERIES D03		
Item	**Description**	**Item-No.**
KPS15-04/04..../Q-10	Power Trailing Chain Cable .../Q, 10 m for D03	0150-3654
KPS15-04/04-./Q-	Power Trailing Chain Cable .../Q, for D03, Custom length	0150-3579
KSS05-02/06-./J-10	Encoder Trailing Chain Cable ./J, 10 m for D03	0150-3655
KSS05-02/06-./J-	Encoder Trailing Chain Cable ./J, for D03, Custom length	0150-3611
KPS15-04/04	Power Trailing Chain Cable P10-...-Dx3 (per m)	0150-2269
KSS05-02/06	Trailing Chain Cable Encoder P10-...-Dx3 (per m)	0150-2490

CONNECTOR		
Item	**Description**	**Item-No.**
MC10-L/m	Connector Power E1400/X2	0150-3382
MC01-D15/f	Motor Connector D15 (f)	0150-3136
MC10-Q/f	Connector Power PS10-70	0150-2268
MC10-J/f	Connector Encoder PS10-70	0150-2269

MOTOR FLANGES



Item	Description	Item-No.
PF10-70x270	Flange for PS10-70x240	0150-2274



Item	Description	Item-No.
PF10-70x270-FC	Flange for PS10-70x240 fluid cooling	0150-2293

FIND MORE PRODUCT DETAILS IN THE CHAPTER "ACCESSORIES".

FANS



Item	Description	Item-No.
HV01-37/48	Fan cooling for H01-37/48 &PF02-37/48	0150-5051

FIND MORE PRODUCT DETAILS IN THE CHAPTER "ACCESSORIES".

SLIDER MOUNTING



Item	Description	Item-No.
PLF01-28	Fixed Bearing Set for 27/28 mm sliders	0150-3087
PLF01-28-SS	Fixed Bearing Set for 27/28 mm sliders, stainless steel	0150-3297
PLL01-28	Floating Bearing for 28 mm sliders	0150-3094
PLM01-28-MK	Mounting Kit for 28 mm sliders	0150-3095

FIND MORE PRODUCT DETAILS IN THE CHAPTER "ACCESSORIES".

BEARING KIT



Item	Description	Item-No.
PB10-70x240-L	Bearing Kit for PS10-70x240	0150-3433

FIND MORE PRODUCT DETAILS IN THE CHAPTER "ACCESSORIES".

LUBRICANT RESERVOIR



Item	Description	Item-No.
PA10-70/28	Lubricant reservoir for PS10-70 with lubricating nipple	0150-3543

EXTERNAL POSITION SENSORS



Item	Description	Item-No.
MS01-1/D	Linear Encoder 1µm, A/B (for incremental strip)	0150-1840
MB01-1000	Magnetic incremental strip for MS01-1/D, per cm	0150-1963
KS025-D15/D-Encoder	Encoder Cable (Length in m)	0150-3168

FIND MORE PRODUCT DETAILS IN THE CHAPTER "ACCESSORIES".



Item	Description	Item-No.
MS01-1/D-SSI	Linear Encoder 1µm, A/B (for absolute strip)	0150-2095
MB01-1000-ABS	Magnetic absolute strip for MS01-1/D-SSI (per cm)	0150-2096
EC01-ABS/ENC-12-S	MS01-1/D-SSI Encoder connector straight	0150-3616
KSS01-12-D15/ABS-ENC	Special cable for MS01-1/D-SSI on C1100/C1200/C1400/E1200/E1400 Drives	0150-3652

FIND MORE PRODUCT DETAILS IN THE CHAPTER "ACCESSORIES".

LINEAR MOTORS P10-70x320U



- 3 x 400VAC Technology
- Peak forces up to 2180 N
- Extremely high dynamic
- Separate connector for sensor and power cable
- Can also be controlled by standard third-party servo drives

LINEAR MOTORS P10-70x320U

Technical Data ____ **571**

Motor Specifications

P10-70x320U/30 ..... **576**

P10-70x320U/130 ..... **577**

P10-70x320U/230 ..... **578**

P10-70x320U/330 ..... **579**

P10-70x320U/430 ..... **580**

P10-70x320U/530 ..... **581**

P10-70x320U/730 ..... **582**

P10-70x320U/930 ..... **583**

P10-70x320U/1130 ..... **584**

P10-70x320U/1330 ..... **585**

P10-70x320U/1530 ..... **586**

Linear Guides ____ **587**

Accessories ____ **589**



MOTOR FAMILY P10-70x320U

Technical Data				
Stroke				
Max. Stroke (ES)	mm	(in)	1530	(60.2)
Force				
Max. Force @ 1x230VAC	N	(lbf)	2170	(487)
Max. Force @ 3x400VAC	N	(lbf)	2180	(489)
Max. Cont. Force [Passive cooling/ Fan / Fluid]	N	(lbf)	260 / 400 / 700	(58 / 89 / 160)
Max. Border Force relative	%		100	
Force Constant 1	N/A_{pk}	(lbf/A_{pk})	64	(14.4)
Force Constant 2	N/A_{rms}	(lbf/A_{rms})	90.5	(20.3)
Velocity				
Max. Velocity @ 1x230VAC	m/s	(in/s)	2.8	(109.9)
Max. Velocity @ 3x400VAC	m/s	(in/s)	4.9	(199.9)
Position Detection				
Position Resolution	mm	(in)	0.005	(0.0002)
Repeatability	mm	(in)	±0.05	(±0.002)
Position Resolution with ES	mm	(in)	0.001	(0.00004)
Repeatability with ES	mm	(in)	±0.01	(±0.0004)
Linearity with ES	mm	(in)	±0.01	(±0.0004)
Electrical Data				
Max. Current @ 1x230VAC	A_{pk} / A_{rms}		33.7 / 23.8	
Max. Current @ 3x400VAC	A_{pk} / A_{rms}		33.9 / 23.9	
Max. Cont. Current 1 [Passive cooling /Fan / Fluid]	A_{pk}		4.1 / 6.2 / 11	
Max. Cont. Current 2 [Passive cooling /Fan / Fluid]	A_{rms}		2.9 / 4.4 / 7.7	
Back EMF Constant	V_{pk} / (m/s)	(V_{pk} / (in/s))	73.9	(1.88)
Terminal Resistance 25 °C / 120 °C	Ohm		5.5 / 7.5	
Terminal Inductivity	mH		10	
Magnetic Period	mm	(in)	40	(1.57)
Thermal Data				
Max. Winding Temperature (Sensor)	°C		90	
Thermal Resistance [Passive cooling / Fan / Fluid]	°K/W		0.65 / 0.28 / 0.09	
Thermal Time Constant [Passive cooling / Fan / Fluid]	s		2100 / 500 / 110	
Mechanical Data				
Stator Diameter	mm	(in)	70	(2.8)
Stator Length	mm	(in)	420	(17)
Stator Mass	g	(lb)	6900	(15.18)
Slider Diameter	mm	(in)	28	(1.1)
Slider Length	mm	(in)	490 - 1990	(19 - 78)
Slider Mass	g	(lb)	2300 - 9350	(5.06 - 20.57)
IP Code			IP 65	
Certification				
UL	File-No.		E354430	

STATOR

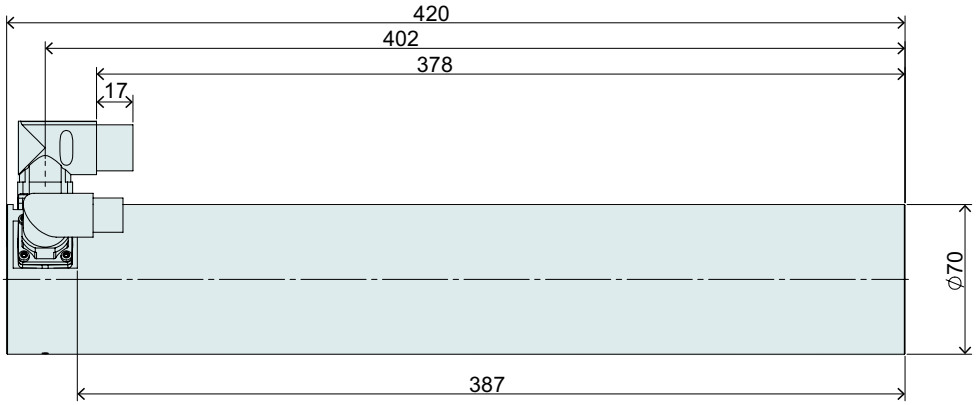

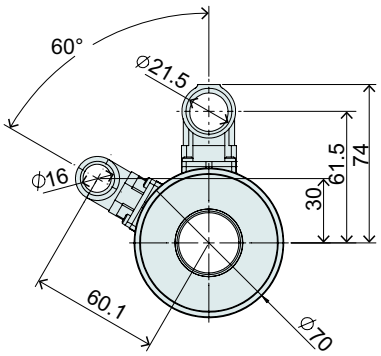

Item	Description	Item-No.
PS10-70x320U-BL-QJ	Stator 3x400VAC, LinMot Encoder	0150-1294
PS10-70x320U-BL-QJ-D01	Stator 3x400VAC, Sin/Cos Encoder 1Vpp, KTY	0150-2285
PS10-70x320U-BL-QJ-D02	Stator 3x400VAC, Sin/Cos Encoder 1Vpp, PTC	0150-2343
PS10-70x320U-BL-QJ-D03	Stator 3x400VAC, Sin/Cos 1Vpp, KTY on power connector	0150-2711

CONNECTOR PS10-70x320U-BL-QJ

Motor Connector Wiring		Connector Encoder J	Wire Color Motor Cable
+5 VDC	Supply	1	red
GND	Supply	2	black
Sense +5V	Supply Sense	3	white
Sense GND	Supply Sense	4	brown
Mot. Link C+	Communication	5	pink
Mot. Link C-	Communication	6	grey
Sin+	Encoder	7	yellow
Sin-	Encoder	8	orange
Cos+	Encoder	9	green
Cos-	Encoder	10	blue
n. c.	n. c.	11	n. c.
n. c.	n. c.	12	n. c.
n. c.	n. c.	13	n. c.
n. c.	n. c.	14	n. c.
n. c.	n. c.	15	n. c.
n. c.	n. c.	16	n. c.
n. c.	n. c.	17	n. c.

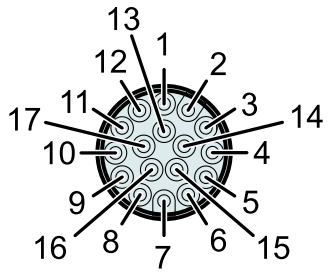

Connector Encoder J

View: Motor connector, plug side

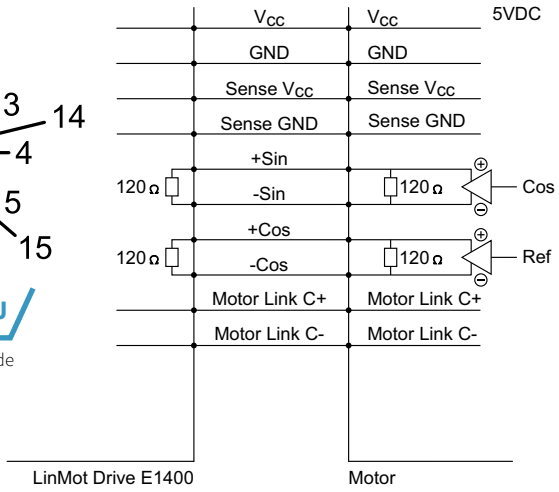

Motor Connector Wiring	Connector Power Q	Wire Color Motor Cable
Phase U	1	red
PE	2	yellow-green
Phase W	3	green
Phase V	4	blue
n. c.	A	n. c.
n. c.	B	n. c.
n. c.	C	n. c.
n. c.	D	n. c.

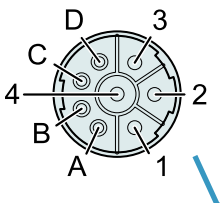

Connector Power Q

View: Motor connector, plug side

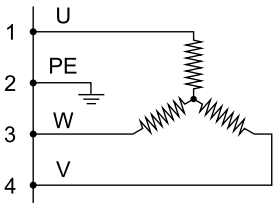

CONNECTOR PS10-70x320U-BL-QJ-D01/02

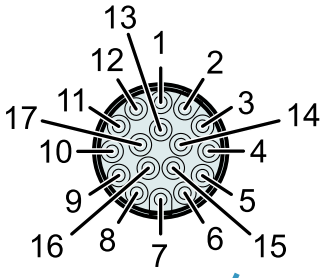

Connector Encoder J

View: Motor connector, plug side

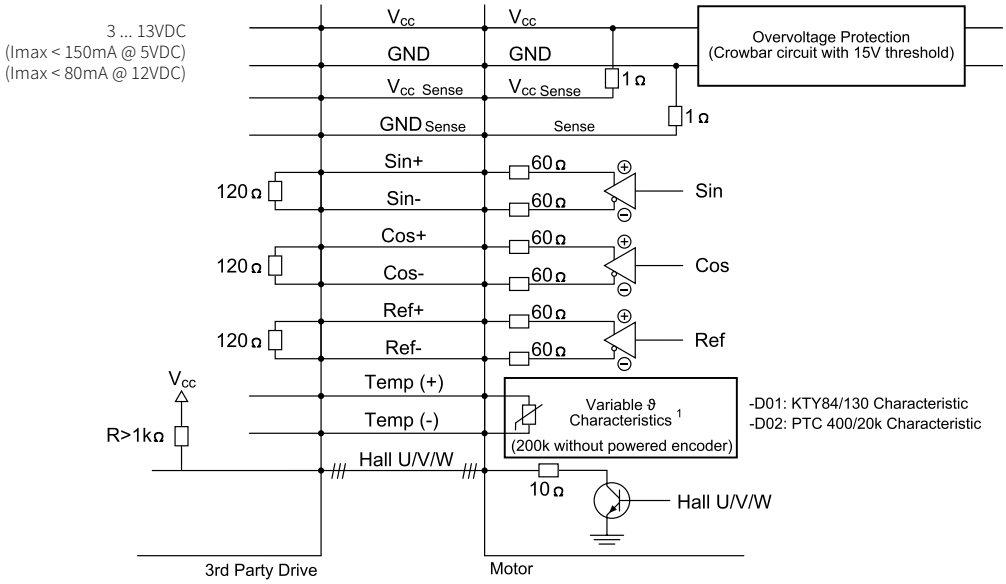

Motor Connector Wiring				
PS10-70x320U-BL-QJ-D01	PS10-70x320U-BL-QJ-D02	Function	Connector Encoder J	Wire Color Motor Cable
3 ... 13 VDC	3 ... 13 VDC	Supply	1	white
GND	GND	Supply	2	brown
Vcc Sense (optional)	Vcc Sense (optional)	Supply Sense	3	green
GND Sense (optional)	GND Sense (optional)	Supply Sense	4	yellow
Do not connect	Do not connect	–	5	–
Do not connect	Do not connect	–	6	–
Sin+	Sin+	Encoder 1 Vpp	7	grey
Sin-	Sin-	Encoder 1 Vpp	8	pink
Cos+	Cos+	Encoder 1 Vpp	9	blue
Cos-	Cos-	Encoder 1 Vpp	10	red
Ref+	Ref+	Encoder 1 Vpp	11	black
Ref-	Ref-	Encoder 1 Vpp	12	violett
Hall U	Hall U	Encoder (open collector)	13	grey-red
Hall V	Hall V	Encoder (open collector)	14	red-blue
Hall W	Hall W	Encoder (open collector)	15	white-green
Temp+ (KTY84/130 Char.)	Temp+ (PTC 400/20k Char.)	Temperature[1]	16	yellow-brown
Temp- (KTY84/130 Char.)	Temp- (PTC 400/20k Char.)	Temperature[1]	17	white-yellow

1) The temperature evaluation circiut must be powered from the encoder supply and must be at the same potential. The grounds of the temperature evaluation circuit and the encoder have to be connected. The encoder must have been powered on for at least 50 ms, before valid temperatures can be measured. If the encoder is powered off, 200k Ohms are measured between Pins 16 and 17. The maximum voltage between Pin 16 and 17 must not exceed 16 VDC. The maximum current must not exceed 15 mA.

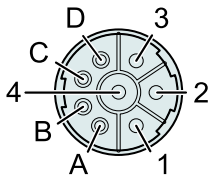

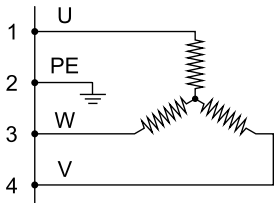

Connector Power Q

View: Motor connector, plug side

Motor Connector Wiring			
PS10-70x320U-BL-QJ-D01	PS10-70x320U-BL-QJ-D02	Connector Power Q	Wire Color Motor Cable
Phase U	Phase U	1	red
PE	PE	2	yellow-green
Phase W	Phase W	3	green
Phase V	Phase V	4	blue
n. c.	n. c.	A	n. c.
n. c.	n. c.	B	n. c.
n. c.	n. c.	C	n. c.
n. c.	n. c.	D	n. c.

CONNECTOR PS10-70X320U-BL-QJ-D03

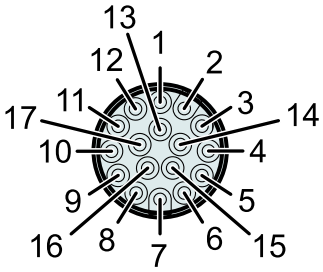

Connector Encoder J

View: Motor connector, plug side

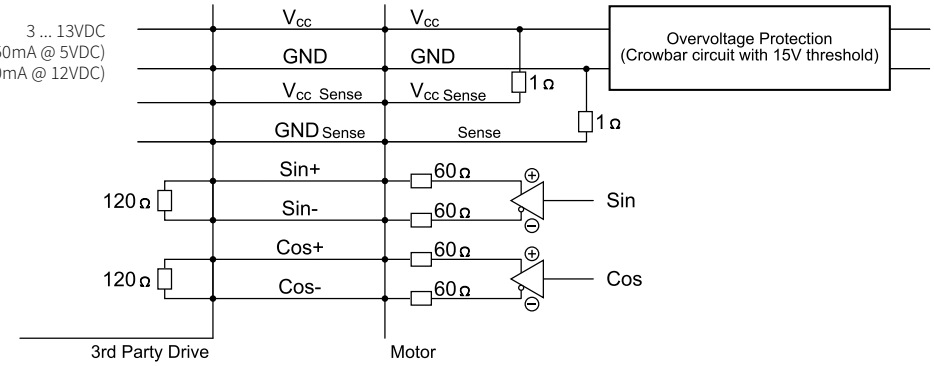

Motor Connector Wiring		Connector Encoder J	Wire Color Motor Cable
3 ... 13 VDC	Supply	1	red
GND	Supply	2	black
Vcc Sense (optional)	Supply Sense	3	white
GND Sense (optional)	Supply Sense	4	brown
Do not connect	–	5	–
Do not connect	–	6	–
Sin+	Encoder 1 Vpp	7	yellow
Sin-	Encoder 1 Vpp	8	orange
Cos+	Encoder 1 Vpp	9	green
Cos-	Encoder 1 Vpp	10	blue
n. c.	–	11	n. c.
n. c.	–	12	n. c.
n. c.	–	13	n. c.
Do not connect	–	14	n. c.
n. c.	–	15	n. c.
n. c.	–	16	n. c.
n. c.	–	17	n. c.

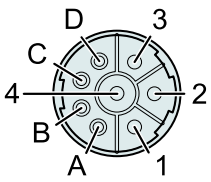

Connector Power Q

View: Motor connector, plug side

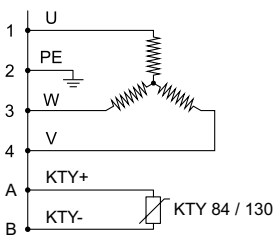

Motor Connector Wiring	Connector Power Q	Wire Color Motor Cable
Phase U	1	red (previously: black 1)
PE	2	yellow-green
Phase W	3	green (previously: black 3)
Phase V	4	blue (previously: black 2)
KTY +	A	purple (previously: black 5)
KTY -	B	grey (previously: black 6)
n. c.	C	yellow (previously: black 7)
n. c.	D	brown (previously: black 8)

SLIDER

Slider Standard

Number of grooves determines the slider type
(see chapter 2 / slider) and marks the front end.

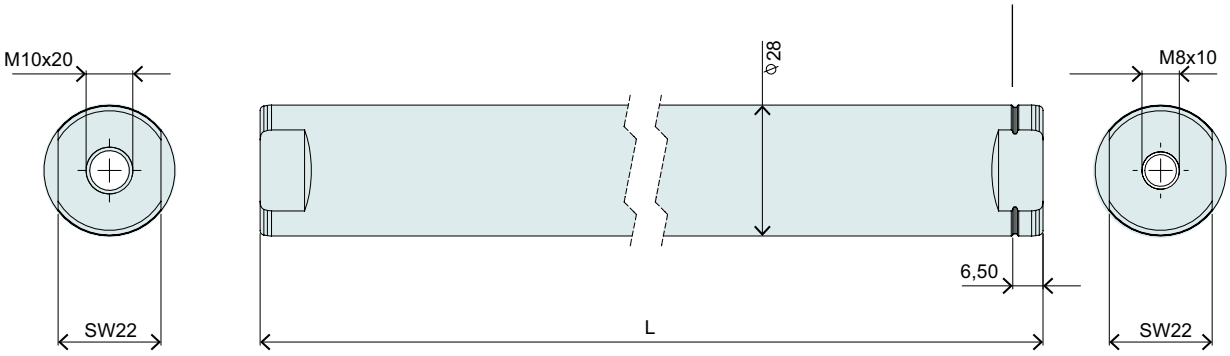

Slider Standard			
Item	Description	Max. Stroke [mm]	Item-No.
PL10-28x490/440	Slider for P10-70 'standard'	30	0150-2195
PL10-28x590/540	Slider for P10-70 'standard'	130	0150-2196
PL10-28x690/640	Slider for P10-70 'standard'	230	0150-2197
PL10-28x790/740	Slider for P10-70 'standard'	330	0150-2198
PL10-28x890/840	Slider for P10-70 'standard'	430	0150-2199
PL10-28x990/940	Slider for P10-70 'standard'	530	0150-2203
PL10-28x1190/1140	Slider for P10-70 'standard'	730	0150-2204
PL10-28x1390/1340	Slider for P10-70 'standard'	930	0150-2205
PL10-28x1590/1540	Slider for P10-70 'standard'	1130	0150-2206
PL10-28x1790/1740	Slider for P10-70 'standard'	1330	0150-2207
PL10-28x1990/1940	Slider for P10-70 'standard'	1530	0150-2208

P10-70x320U/30-BL-QJ

Max. Stroke: 30 mm
Peak Force: 2180 N

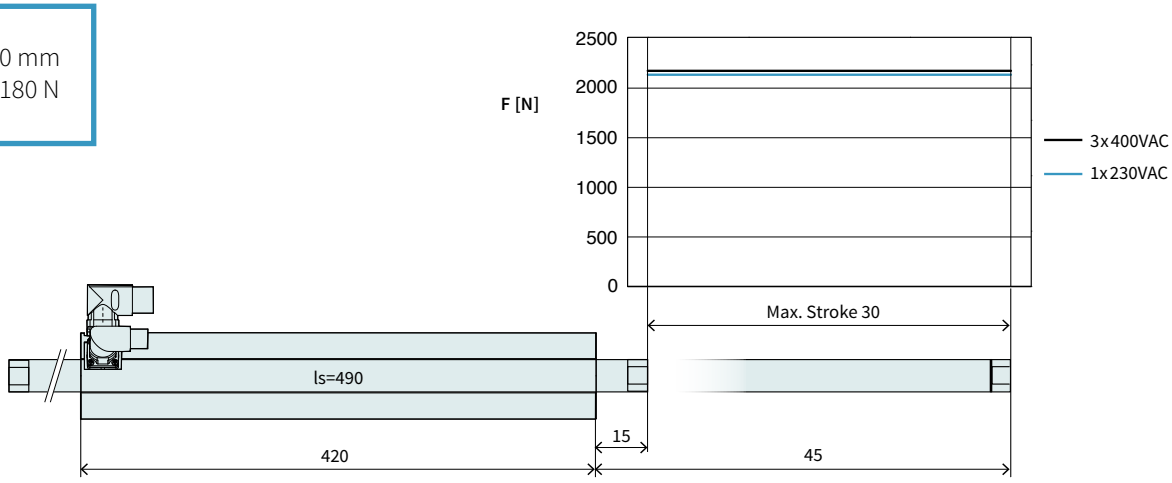

Dimensions in mm

Technical Data P10-70x320U/30				
Stroke				
Max. Stroke	mm	(in)	30	(1.17)
Force				
Max. Force @ 1x230VAC	N	(lbf)	2170	(487)
Max. Force @ 3x400VAC	N	(lbf)	2180	(489)
Max. Cont. Force [Passive cooling/ Fan / Fluid]	N	(lbf)	260 / 400 / 700	(58 / 89 / 160)
Max. Border Force relative	%		100	
Force Constant 1	N/A_{pk}	(lbf/A_{pk})	64	(14.4)
Force Constant 2	N/A_{rms}	(lbf/A_{rms})	90.5	(20.3)
Velocity				
Max. Velocity @ 1x230VAC	m/s	(in/s)	2.8	(109.9)
Max. Velocity @ 3x400VAC	m/s	(in/s)	4.9	(4.9)
Position Detection				
Repeatability	mm	(in)	±0.05	(±0.002)
Linearity	%		± 1.75	
Electrical Data				
Max. Current @ 1x230VAC	A_{pk} / A_{rms}		33.7 / 23.8	
Max. Current @ 3x400VAC	A_{pk} / A_{rms}		33.9 / 23.9	
Max. Cont. Current 1 [Passive cooling /Fan / Fluid]	A_{pk}		4.1 / 6.2 / 11	
Max. Cont. Current 2 [Passive cooling /Fan / Fluid]	A_{rms}		2.9 / 4.4 / 7.7	
Thermal Data				
Max. Winding Temperature (Sensor)	°C		90	
Thermal Resistance [Passive cooling / Fan / Fluid]	°K/W		0.65 / 0.28 / 0.09	
Thermal Time Constant [Passive cooling / Fan / Fluid]	s		2100 / 500 / 110	
Mechanical Data				
Slider Length	mm	(in)	490	(19)
Slider Mass	g	(lb)	2300	(5.06)

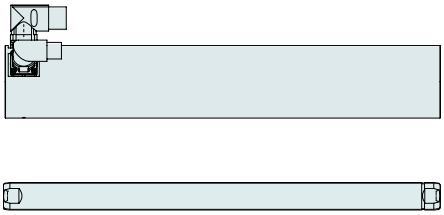

Item	Description	Item-No.
PS10-70x320U-BL-QJ	Stator 3x400VAC, LinMot Encoder	0150-1284
PS10-70x320U-BL-QJ-D01	Stator 3x400VAC, Sin/Cos Encoder 1Vpp, KTY	0150-2285
PS10-70x320U-BL-QJ-D02	Stator 3x400VAC, Sin/Cos Encoder 1Vpp, PTC	0150-2343
PS10-70x320U-BL-QJ-D03	Stator 3x400VAC, Sin/Cos 1Vpp, KTY on power connector	0150-2711
PL10-28x490/440	Slider for P10-70 'standard'	0150-2195

P10-70x320U/130-BL-QJ

Max. Stroke: 130 mm
Peak Force: 2180 N

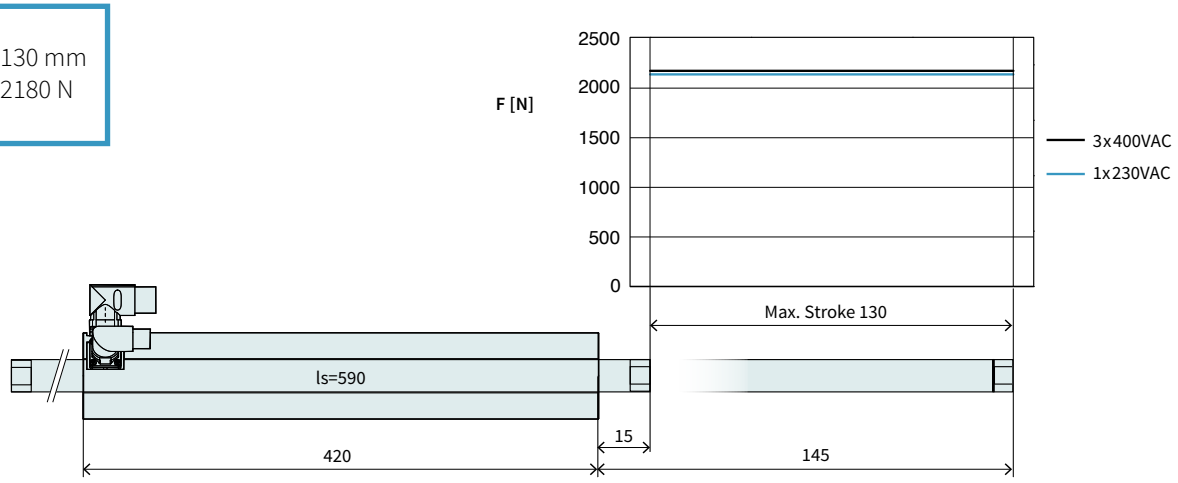

Dimensions in mm

Technical Data P10-70x320U/130				
Stroke				
Max. Stroke	mm	(in)	130	(5.12)
Force				
Max. Force @ 1x230VAC	N	(lbf)	2170	(487)
Max. Force @ 3x400VAC	N	(lbf)	2180	(489)
Max. Cont. Force [Passive cooling/ Fan / Fluid]	N	(lbf)	260 / 400 / 700	(58 / 89 / 160)
Max. Border Force relative	%		100	
Force Constant 1	N/A_{pk}	(lbf/A_{pk})	64	(14.4)
Force Constant 2	N/A_{rms}	(lbf/A_{rms})	90.5	(20.3)
Velocity				
Max. Velocity @ 1x230VAC	m/s	(in/s)	2.8	(109.9)
Max. Velocity @ 3x400VAC	m/s	(in/s)	4.9	(4.9)
Position Detection				
Repeatability	mm	(in)	±0.05	(±0.002)
Linearity	%		± 0.5	
Electrical Data				
Max. Current @ 1x230VAC	A_{pk} / A_{rms}		33.7 / 23.8	
Max. Current @ 3x400VAC	A_{pk} / A_{rms}		33.9 / 23.9	
Max. Cont. Current 1 [Passive cooling /Fan / Fluid]	A_{pk}		4.1 / 6.2 / 11	
Max. Cont. Current 2 [Passive cooling /Fan / Fluid]	A_{rms}		2.9 / 4.4 / 7.7	
Thermal Data				
Max. Winding Temperature (Sensor)	°C		90	
Thermal Resistance [Passive cooling / Fan / Fluid]	°K/W		0.65 / 0.28 / 0.09	
Thermal Time Constant [Passive cooling / Fan / Fluid]	s		2100 / 500 / 110	
Mechanical Data				
Slider Length	mm	(in)	590	(23)
Slider Mass	g	(lb)	2770	(6.09)

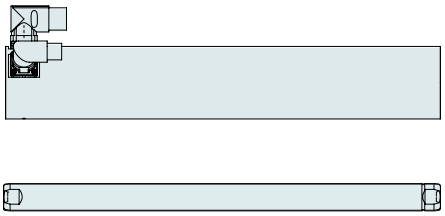

Item	Description	Item-No.
PS10-70x320U-BL-QJ	Stator 3x400VAC, LinMot Encoder	0150-1284
PS10-70x320U-BL-QJ-D01	Stator 3x400VAC, Sin/Cos Encoder 1Vpp, KTY	0150-2285
PS10-70x320U-BL-QJ-D02	Stator 3x400VAC, Sin/Cos Encoder 1Vpp, PTC	0150-2343
PS10-70x320U-BL-QJ-D03	Stator 3x400VAC, Sin/Cos 1Vpp, KTY on power connector	0150-2711
PL10-28x590/540	Slider for P10-70 'standard'	0150-2196

P10-70x320U/230-BL-QJ

Max. Stroke: 230 mm
Peak Force: 2180 N

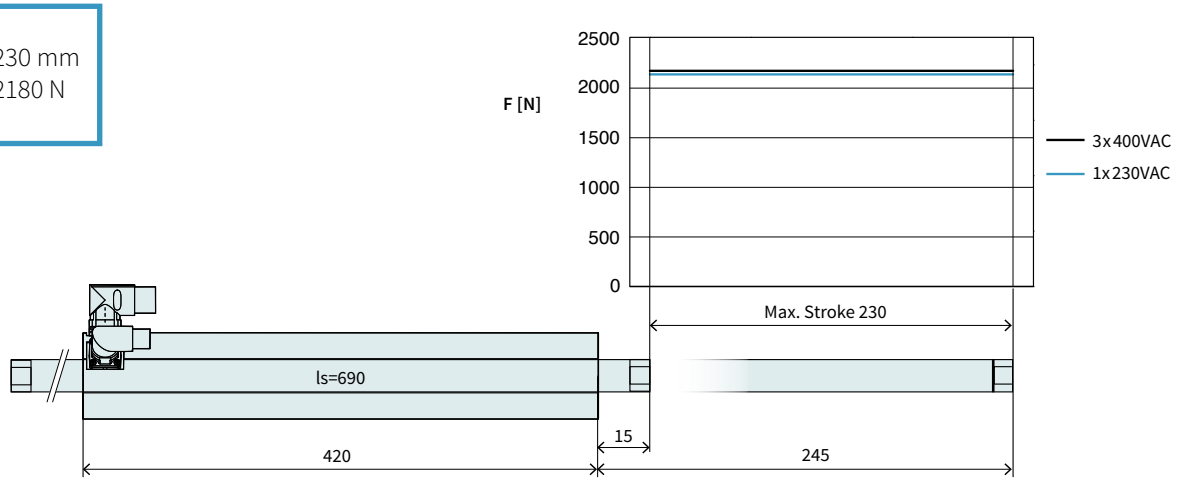

Dimensions in mm

Technical Data P10-70x320U/230				
Stroke				
Max. Stroke	mm	(in)	230	(9.06)
Force				
Max. Force @ 1x230VAC	N	(lbf)	2170	(487)
Max. Force @ 3x400VAC	N	(lbf)	2180	(489)
Max. Cont. Force [Passive cooling/ Fan / Fluid]	N	(lbf)	260 / 400 / 700	(58 / 89 / 160)
Max. Border Force relative	%		100	
Force Constant 1	N/A_{pk}	(lbf/A_{pk})	64	(14.4)
Force Constant 2	N/A_{rms}	(lbf/A_{rms})	90.5	(20.3)
Velocity				
Max. Velocity @ 1x230VAC	m/s	(in/s)	2.8	(109.9)
Max. Velocity @ 3x400VAC	m/s	(in/s)	4.9	(4.9)
Position Detection				
Repeatability	mm	(in)	±0.05	(±0.002)
Linearity	%		± 0.3	
Electrical Data				
Max. Current @ 1x230VAC	A_{pk} / A_{rms}		33.7 / 23.8	
Max. Current @ 3x400VAC	A_{pk} / A_{rms}		33.9 / 23.9	
Max. Cont. Current 1 [Passive cooling /Fan / Fluid]	A_{pk}		4.1 / 6.2 / 11	
Max. Cont. Current 2 [Passive cooling /Fan / Fluid]	A_{rms}		2.9 / 4.4 / 7.7	
Thermal Data				
Max. Winding Temperature (Sensor)	°C		90	
Thermal Resistance [Passive cooling / Fan / Fluid]	°K/W		0.65 / 0.28 / 0.09	
Thermal Time Constant [Passive cooling / Fan / Fluid]	s		2100 / 500 / 110	
Mechanical Data				
Slider Length	mm	(in)	690	(27)
Slider Mass	g	(lb)	3240	(7.13)

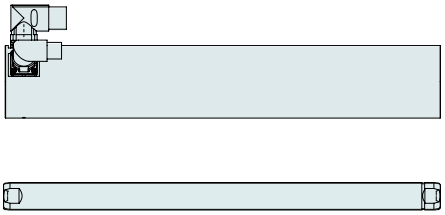

Item	Description	Item-No.
PS10-70x320U-BL-QJ	Stator 3x400VAC, LinMot Encoder	0150-1284
PS10-70x320U-BL-QJ-D01	Stator 3x400VAC, Sin/Cos Encoder 1Vpp, KTY	0150-2285
PS10-70x320U-BL-QJ-D02	Stator 3x400VAC, Sin/Cos Encoder 1Vpp, PTC	0150-2343
PS10-70x320U-BL-QJ-D03	Stator 3x400VAC, Sin/Cos 1Vpp, KTY on power connector	0150-2711
PL10-28x690/640	Slider for P10-70 'standard'	0150-2197

P10-70x320U/330-BL-QJ

Max. Stroke: 330 mm
Peak Force: 2180 N

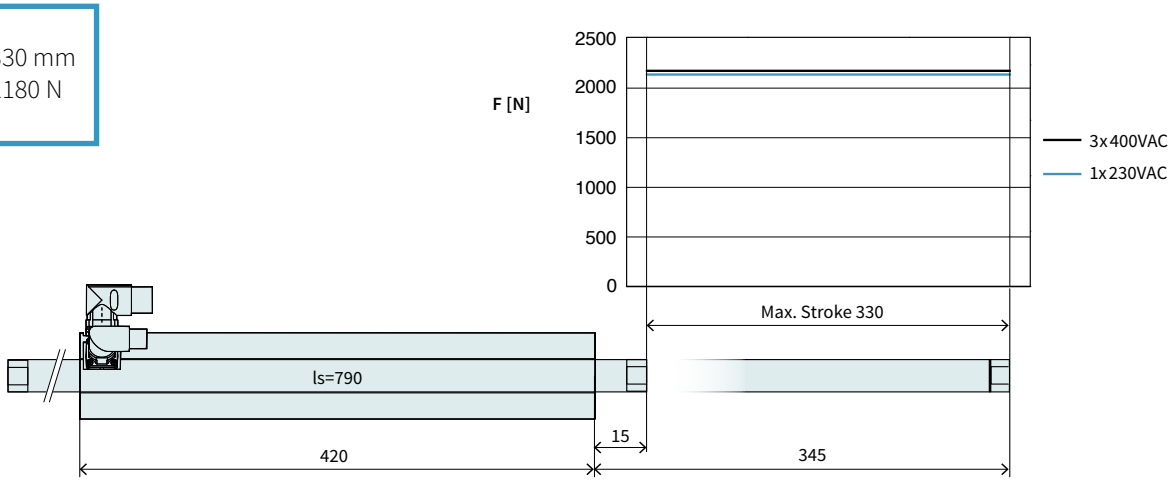

Dimensions in mm

Technical Data P10-70x320U/330				
Stroke				
Max. Stroke	mm	(in)	330	(12.99)
Force				
Max. Force @ 1x230VAC	N	(lbf)	2170	(487)
Max. Force @ 3x400VAC	N	(lbf)	2180	(489)
Max. Cont. Force [Passive cooling/ Fan / Fluid]	N	(lbf)	260 / 400 / 700	(58 / 89 / 160)
Max. Border Force relative	%		100	
Force Constant 1	N/A_{pk}	(lbf/A_{pk})	64	(14.4)
Force Constant 2	N/A_{rms}	(lbf/A_{rms})	90.5	(20.3)
Velocity				
Max. Velocity @ 1x230VAC	m/s	(in/s)	2.8	(109.9)
Max. Velocity @ 3x400VAC	m/s	(in/s)	4.9	(4.9)
Position Detection				
Repeatability	mm	(in)	±0.05	(±0.002)
Linearity	%		± 0.25	
Electrical Data				
Max. Current @ 1x230VAC	A_{pk} / A_{rms}		33.7 / 23.8	
Max. Current @ 3x400VAC	A_{pk} / A_{rms}		33.9 / 23.9	
Max. Cont. Current 1 [Passive cooling /Fan / Fluid]	A_{pk}		4.1 / 6.2 / 11	
Max. Cont. Current 2 [Passive cooling /Fan / Fluid]	A_{rms}		2.9 / 4.4 / 7.7	
Thermal Data				
Max. Winding Temperature (Sensor)	°C		90	
Thermal Resistance [Passive cooling / Fan / Fluid]	°K/W		0.65 / 0.28 / 0.09	
Thermal Time Constant [Passive cooling / Fan / Fluid]	s		2100 / 500 / 110	
Mechanical Data				
Slider Length	mm	(in)	790	(31)
Slider Mass	g	(lb)	3710	(8.16)

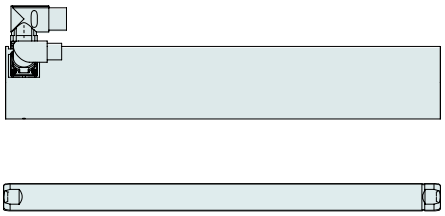

Item	Description	Item-No.
PS10-70x320U-BL-QJ	Stator 3x400VAC, LinMot Encoder	0150-1284
PS10-70x320U-BL-QJ-D01	Stator 3x400VAC, Sin/Cos Encoder 1Vpp, KTY	0150-2285
PS10-70x320U-BL-QJ-D02	Stator 3x400VAC, Sin/Cos Encoder 1Vpp, PTC	0150-2343
PS10-70x320U-BL-QJ-D03	Stator 3x400VAC, Sin/Cos 1Vpp, KTY on power connector	0150-2711
PL10-28x790/740	Slider for P10-70 'standard'	0150-2198

P10-70x320U/430-BL-QJ

Max. Stroke: 430 mm
Peak Force: 2180 N

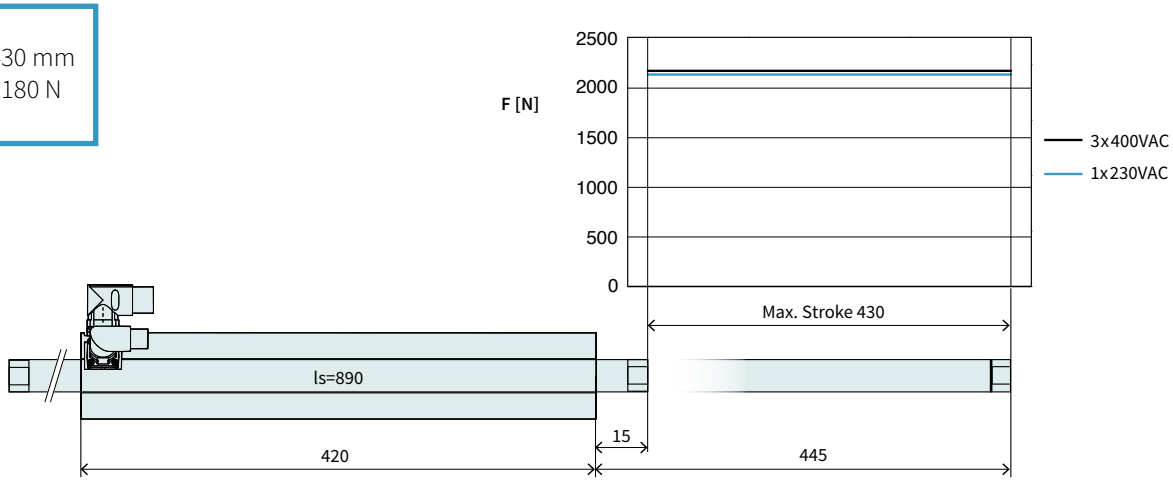

Dimensions in mm

Technical Data P10-70x320U/430				
Stroke				
Max. Stroke	mm	(in)	430	(16.89)
Force				
Max. Force @ 1x230VAC	N	(lbf)	2170	(487)
Max. Force @ 3x400VAC	N	(lbf)	2180	(489)
Max. Cont. Force [Passive cooling/ Fan / Fluid]	N	(lbf)	260 / 400 / 700	(58 / 89 / 160)
Max. Border Force relative	%		100	
Force Constant 1	N/A_{pk}	(lbf/A_{pk})	64	(14.4)
Force Constant 2	N/A_{rms}	(lbf/A_{rms})	90.5	(20.3)
Velocity				
Max. Velocity @ 1x230VAC	m/s	(in/s)	2.8	(109.9)
Max. Velocity @ 3x400VAC	m/s	(in/s)	4.9	(4.9)
Position Detection				
Repeatability	mm	(in)	±0.05	(±0.002)
Linearity	%		± 0.2	
Electrical Data				
Max. Current @ 1x230VAC	A_{pk} / A_{rms}		33.7 / 23.8	
Max. Current @ 3x400VAC	A_{pk} / A_{rms}		33.9 / 23.9	
Max. Cont. Current 1 [Passive cooling /Fan / Fluid]	A_{pk}		4.1 / 6.2 / 11	
Max. Cont. Current 2 [Passive cooling /Fan / Fluid]	A_{rms}		2.9 / 4.4 / 7.7	
Thermal Data				
Max. Winding Temperature (Sensor)	°C		90	
Thermal Resistance [Passive cooling / Fan / Fluid]	°K/W		0.65 / 0.28 / 0.09	
Thermal Time Constant [Passive cooling / Fan / Fluid]	s		2100 / 500 / 110	
Mechanical Data				
Slider Length	mm	(in)	890	(35)
Slider Mass	g	(lb)	4180	(9.2)

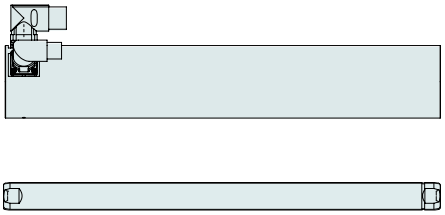

Item	Description	Item-No.
PS10-70x320U-BL-QJ	Stator 3x400VAC, LinMot Encoder	0150-1284
PS10-70x320U-BL-QJ-D01	Stator 3x400VAC, Sin/Cos Encoder 1Vpp, KTY	0150-2285
PS10-70x320U-BL-QJ-D02	Stator 3x400VAC, Sin/Cos Encoder 1Vpp, PTC	0150-2343
PS10-70x320U-BL-QJ-D03	Stator 3x400VAC, Sin/Cos 1Vpp, KTY on power connector	0150-2711
PL10-28x890/840	Slider for P10-70 'standard'	0150-2199

P10-70x320U/530-BL-QJ

Max. Stroke: 530 mm
Peak Force: 2180 N

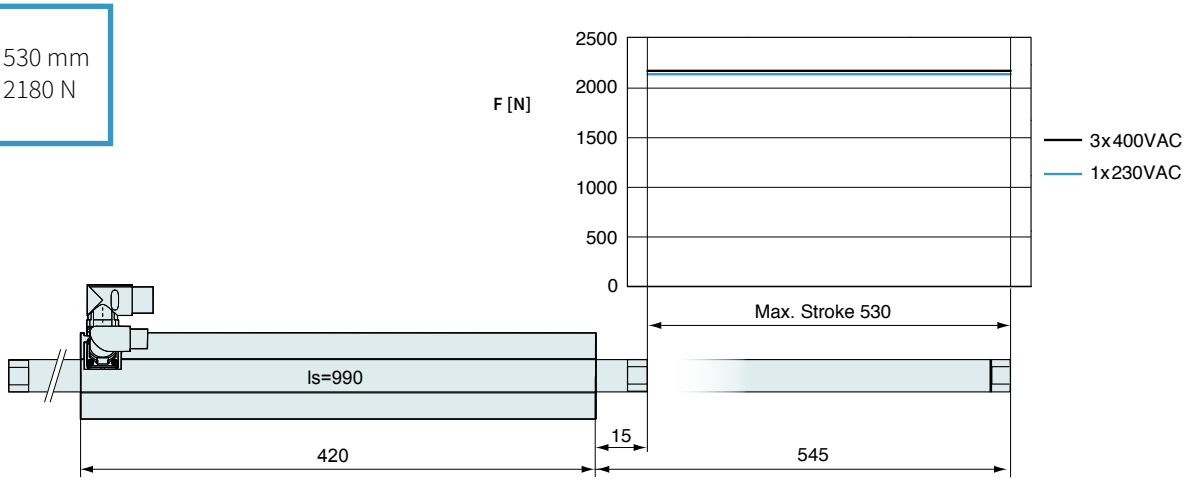

Dimensions in mm

Technical Data P10-70x320U/530				
Stroke				
Max. Stroke	mm	(in)	530	(20.89)
Force				
Max. Force @ 1x230VAC	N	(lbf)	2170	(487)
Max. Force @ 3x400VAC	N	(lbf)	2180	(489)
Max. Cont. Force [Passive cooling/ Fan / Fluid]	N	(lbf)	260 / 400 / 700	(58 / 89 / 160)
Max. Border Force relative	%		100	
Force Constant 1	N/A_{pk}	(lbf/A_{pk})	64	(14.4)
Force Constant 2	N/A_{rms}	(lbf/A_{rms})	90.5	(20.3)
Velocity				
Max. Velocity @ 1x230VAC	m/s	(in/s)	2.8	(109.9)
Max. Velocity @ 3x400VAC	m/s	(in/s)	4.9	(4.9)
Position Detection				
Repeatability	mm	(in)	±0.05	(±0.002)
Linearity	%		± 0.2	
Electrical Data				
Max. Current @ 1x230VAC	A_{pk} / A_{rms}		33.7 / 23.8	
Max. Current @ 3x400VAC	A_{pk} / A_{rms}		33.9 / 23.9	
Max. Cont. Current 1 [Passive cooling /Fan / Fluid]	A_{pk}		4.1 / 6.2 / 11	
Max. Cont. Current 2 [Passive cooling /Fan / Fluid]	A_{rms}		2.9 / 4.4 / 7.7	
Thermal Data				
Max. Winding Temperature (Sensor)	°C		90	
Thermal Resistance [Passive cooling / Fan / Fluid]	°K/W		0.65 / 0.28 / 0.09	
Thermal Time Constant [Passive cooling / Fan / Fluid]	s		2100 / 500 / 110	
Mechanical Data				
Slider Length	mm	(in)	990	(39)
Slider Mass	g	(lb)	4650	(10.23)

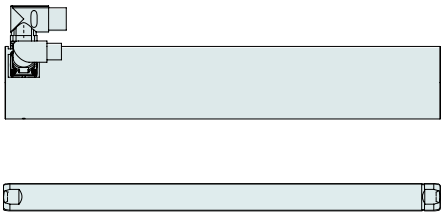

Item	Description	Item-No.
PS10-70x320U-BL-QJ	Stator 3x400VAC, LinMot Encoder	0150-1284
PS10-70x320U-BL-QJ-D01	Stator 3x400VAC, Sin/Cos Encoder 1Vpp, KTY	0150-2285
PS10-70x320U-BL-QJ-D02	Stator 3x400VAC, Sin/Cos Encoder 1Vpp, PTC	0150-2343
PS10-70x320U-BL-QJ-D03	Stator 3x400VAC, Sin/Cos 1Vpp, KTY on power connector	0150-2711
PL10-28x990/940	Slider for P10-70 'standard'	0150-2203

P10-70x320U/730-BL-QJ

Max. Stroke: 730 mm
Peak Force: 2180 N

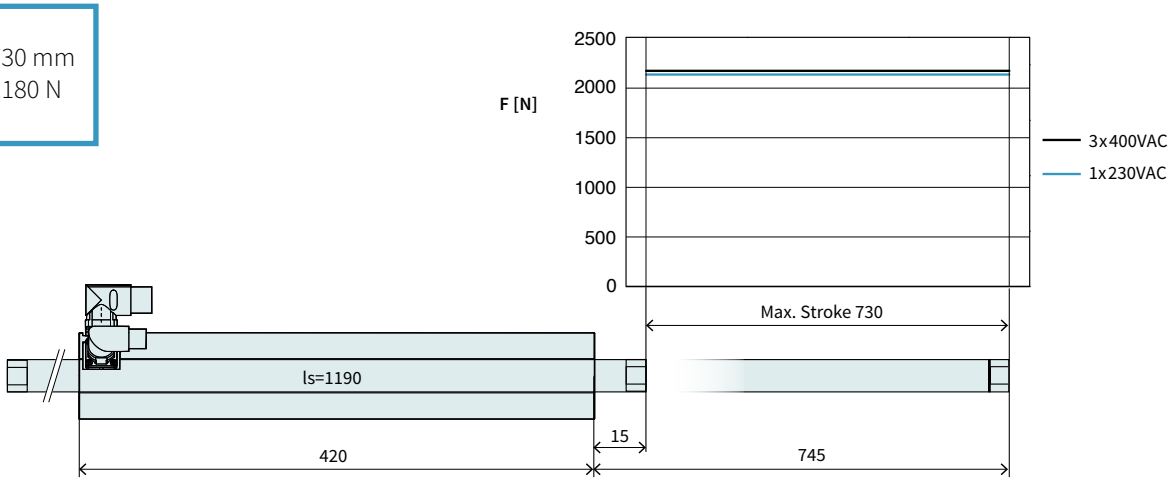

Dimensions in mm

Technical Data P10-70x320U/730				
Stroke				
Max. Stroke	mm	(in)	730	(28.69)
Force				
Max. Force @ 1x230VAC	N	(lbf)	2170	(487)
Max. Force @ 3x400VAC	N	(lbf)	2180	(489)
Max. Cont. Force [Passive cooling/ Fan / Fluid]	N	(lbf)	260 / 400 / 700	(58 / 89 / 160)
Max. Border Force relative	%		100	
Force Constant 1	N/A_{pk}	(lbf/A_{pk})	64	(14.4)
Force Constant 2	N/A_{rms}	(lbf/A_{rms})	90.5	(20.3)
Velocity				
Max. Velocity @ 1x230VAC	m/s	(in/s)	2.8	(109.9)
Max. Velocity @ 3x400VAC	m/s	(in/s)	4.9	(4.9)
Position Detection				
Repeatability	mm	(in)	±0.05	(±0.002)
Linearity	%		± 0.15	
Electrical Data				
Max. Current @ 1x230VAC	A_{pk} / A_{rms}		33.7 / 23.8	
Max. Current @ 3x400VAC	A_{pk} / A_{rms}		33.9 / 23.9	
Max. Cont. Current 1 [Passive cooling /Fan / Fluid]	A_{pk}		4.1 / 6.2 / 11	
Max. Cont. Current 2 [Passive cooling /Fan / Fluid]	A_{rms}		2.9 / 4.4 / 7.7	
Thermal Data				
Max. Winding Temperature (Sensor)	°C		90	
Thermal Resistance [Passive cooling / Fan / Fluid]	°K/W		0.65 / 0.28 / 0.09	
Thermal Time Constant [Passive cooling / Fan / Fluid]	s		2100 / 500 / 110	
Mechanical Data				
Slider Length	mm	(in)	1190	(47)
Slider Mass	g	(lb)	5590	(12.3)

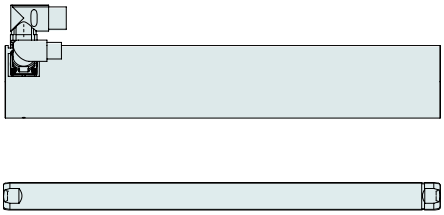

Item	Description	Item-No.
PS10-70x320U-BL-QJ	Stator 3x400VAC, LinMot Encoder	0150-1284
PS10-70x320U-BL-QJ-D01	Stator 3x400VAC, Sin/Cos Encoder 1Vpp, KTY	0150-2285
PS10-70x320U-BL-QJ-D02	Stator 3x400VAC, Sin/Cos Encoder 1Vpp, PTC	0150-2343
PS10-70x320U-BL-QJ-D03	Stator 3x400VAC, Sin/Cos 1Vpp, KTY on power connector	0150-2711
PL10-28x1190/1140	Slider for P10-70 'standard'	0150-2204

P10-70x320U/930-BL-QJ

Max. Stroke: 930 mm
Peak Force: 2180 N

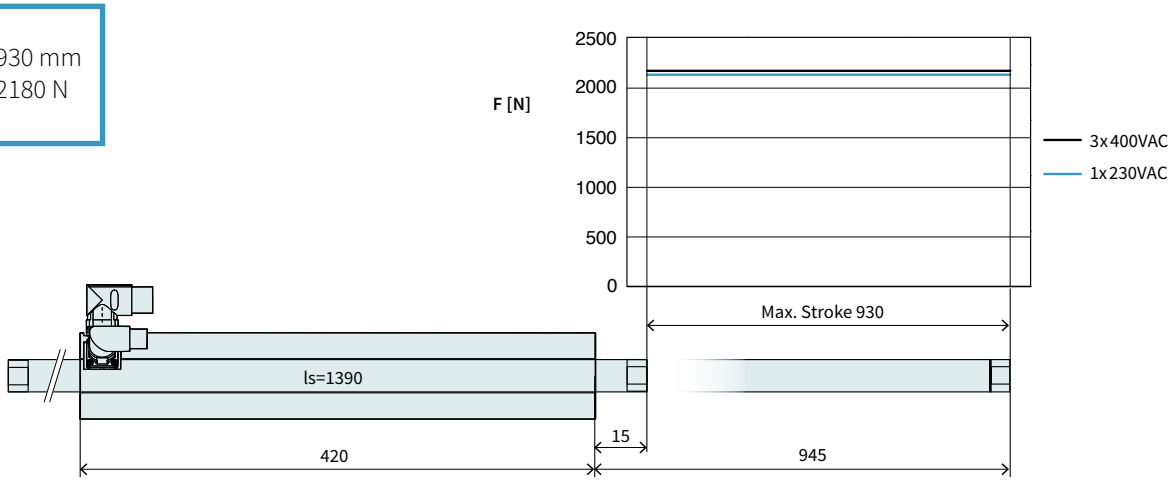

Dimensions in mm

Technical Data P10-70x320U/930				
Stroke				
Max. Stroke	mm	(in)	930	(36.6)
Force				
Max. Force @ 1x230VAC	N	(lbf)	2170	(487)
Max. Force @ 3x400VAC	N	(lbf)	2180	(489)
Max. Cont. Force [Passive cooling/ Fan / Fluid]	N	(lbf)	260 / 400 / 700	(58 / 89 / 160)
Max. Border Force relative	%		100	
Force Constant 1	N/A_{pk}	(lbf/A_{pk})	64	(14.4)
Force Constant 2	N/A_{rms}	(lbf/A_{rms})	90.5	(20.3)
Velocity				
Max. Velocity @ 1x230VAC	m/s	(in/s)	2.8	(109.9)
Max. Velocity @ 3x400VAC	m/s	(in/s)	4.9	(4.9)
Position Detection				
Repeatability	mm	(in)	±0.05	(±0.002)
Linearity	%		± 0.15	
Electrical Data				
Max. Current @ 1x230VAC	A_{pk} / A_{rms}		33.7 / 23.8	
Max. Current @ 3x400VAC	A_{pk} / A_{rms}		33.9 / 23.9	
Max. Cont. Current 1 [Passive cooling /Fan / Fluid]	A_{pk}		4.1 / 6.2 / 11	
Max. Cont. Current 2 [Passive cooling /Fan / Fluid]	A_{rms}		2.9 / 4.4 / 7.7	
Thermal Data				
Max. Winding Temperature (Sensor)	°C		90	
Thermal Resistance [Passive cooling / Fan / Fluid]	°K/W		0.65 / 0.28 / 0.09	
Thermal Time Constant [Passive cooling / Fan / Fluid]	s		2100 / 500 / 110	
Mechanical Data				
Slider Length	mm	(in)	1390	(55)
Slider Mass	g	(lb)	6530	(14.37)

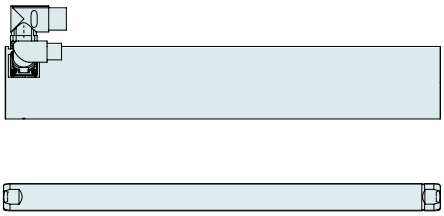

Item	Description	Item-No.
PS10-70x320U-BL-QJ	Stator 3x400VAC, LinMot Encoder	0150-1284
PS10-70x320U-BL-QJ-D01	Stator 3x400VAC, Sin/Cos Encoder 1Vpp, KTY	0150-2285
PS10-70x320U-BL-QJ-D02	Stator 3x400VAC, Sin/Cos Encoder 1Vpp, PTC	0150-2343
PS10-70x320U-BL-QJ-D03	Stator 3x400VAC, Sin/Cos 1Vpp, KTY on power connector	0150-2711
PL10-28x1390/1340	Slider for P10-70 'standard'	0150-2205

P10-70x320U/1130-BL-QJ

Max. Stroke: 1130 mm
Peak Force: 2180 N

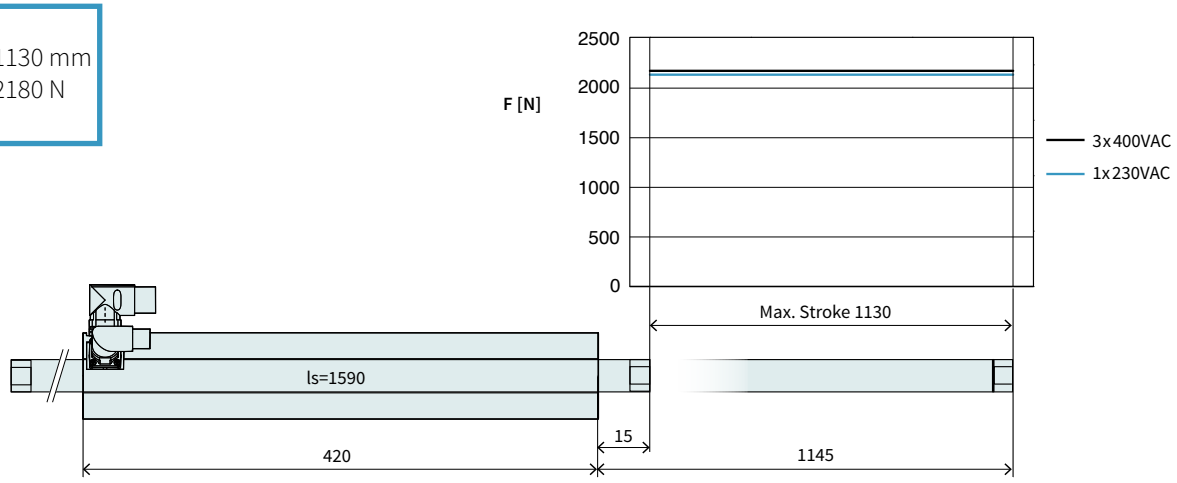

Dimensions in mm

Technical Data P10-70x320U/1130				
Stroke				
Max. Stroke	mm	(in)	1130	(44.49)
Force				
Max. Force @ 1x230VAC	N	(lbf)	2170	(487)
Max. Force @ 3x400VAC	N	(lbf)	2180	(489)
Max. Cont. Force [Passive cooling/ Fan / Fluid]	N	(lbf)	260 / 400 / 700	(58 / 89 / 160)
Max. Border Force relative	%		100	
Force Constant 1	N/A_{pk}	(lbf/A_{pk})	64	(14.4)
Force Constant 2	N/A_{rms}	(lbf/A_{rms})	90.5	(20.3)
Velocity				
Max. Velocity @ 1x230VAC	m/s	(in/s)	2.8	(109.9)
Max. Velocity @ 3x400VAC	m/s	(in/s)	4.9	(4.9)
Position Detection				
Repeatability	mm	(in)	±0.05	(±0.002)
Linearity	%		± 0.15	
Electrical Data				
Max. Current @ 1x230VAC	A_{pk} / A_{rms}		33.7 / 23.8	
Max. Current @ 3x400VAC	A_{pk} / A_{rms}		33.9 / 23.9	
Max. Cont. Current 1 [Passive cooling /Fan / Fluid]	A_{pk}		4.1 / 6.2 / 11	
Max. Cont. Current 2 [Passive cooling /Fan / Fluid]	A_{rms}		2.9 / 4.4 / 7.7	
Thermal Data				
Max. Winding Temperature (Sensor)	°C		90	
Thermal Resistance [Passive cooling / Fan / Fluid]	°K/W		0.65 / 0.28 / 0.09	
Thermal Time Constant [Passive cooling / Fan / Fluid]	s		2100 / 500 / 110	
Mechanical Data				
Slider Length	mm	(in)	1590	(63)
Slider Mass	g	(lb)	7470	(16.43)

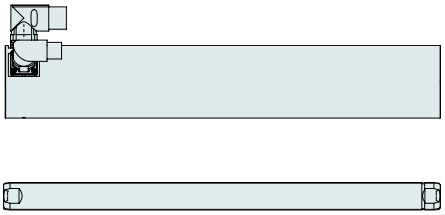

Item	Description	Item-No.
PS10-70x320U-BL-QJ	Stator 3x400VAC, LinMot Encoder	0150-1284
PS10-70x320U-BL-QJ-D01	Stator 3x400VAC, Sin/Cos Encoder 1Vpp, KTY	0150-2285
PS10-70x320U-BL-QJ-D02	Stator 3x400VAC, Sin/Cos Encoder 1Vpp, PTC	0150-2343
PS10-70x320U-BL-QJ-D03	Stator 3x400VAC, Sin/Cos 1Vpp, KTY on power connector	0150-2711
PL10-28x1590/1540	Slider for P10-70 'standard'	0150-2206

P10-70x320U/1330-BL-QJ

Max. Stroke: 1330 mm
Peak Force: 2180 N

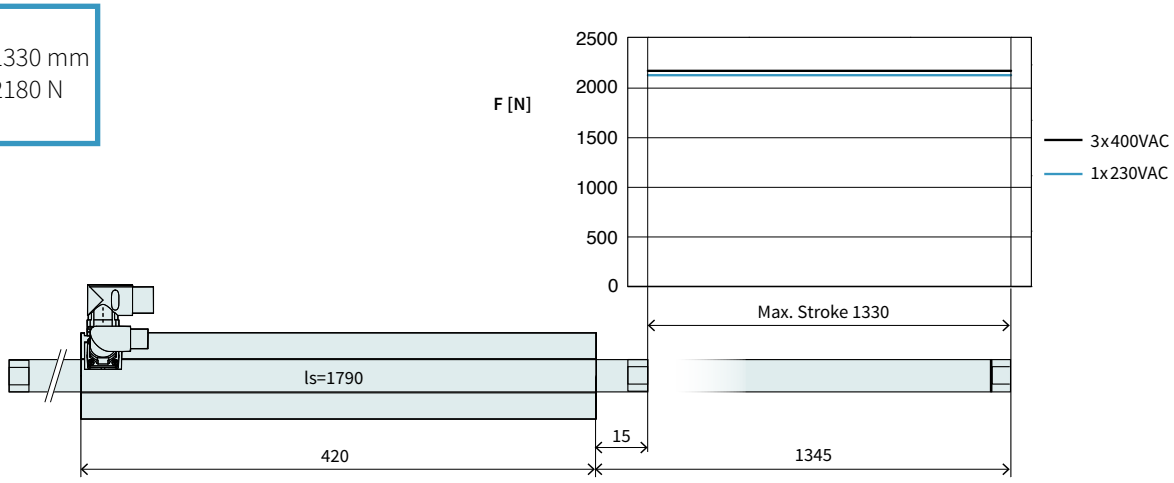

Dimensions in mm

Technical Data P10-70x320U/1330				
Stroke				
Max. Stroke	mm	(in)	1330	(52.39)
Force				
Max. Force @ 1x230VAC	N	(lbf)	2170	(487)
Max. Force @ 3x400VAC	N	(lbf)	2180	(489)
Max. Cont. Force [Passive cooling/ Fan / Fluid]	N	(lbf)	260 / 400 / 700	(58 / 89 / 160)
Max. Border Force relative	%		100	
Force Constant 1	N/A_{pk}	(lbf/A_{pk})	64	(14.4)
Force Constant 2	N/A_{rms}	(lbf/A_{rms})	90.5	(20.3)
Velocity				
Max. Velocity @ 1x230VAC	m/s	(in/s)	2.8	(109.9)
Max. Velocity @ 3x400VAC	m/s	(in/s)	4.9	(4.9)
Position Detection				
Repeatability	mm	(in)	±0.05	(±0.002)
Linearity	%		± 0.15	
Electrical Data				
Max. Current @ 1x230VAC	A_{pk} / A_{rms}		33.7 / 23.8	
Max. Current @ 3x400VAC	A_{pk} / A_{rms}		33.9 / 23.9	
Max. Cont. Current 1 [Passive cooling /Fan / Fluid]	A_{pk}		4.1 / 6.2 / 11	
Max. Cont. Current 2 [Passive cooling /Fan / Fluid]	A_{rms}		2.9 / 4.4 / 7.7	
Thermal Data				
Max. Winding Temperature (Sensor)	°C		90	
Thermal Resistance [Passive cooling / Fan / Fluid]	°K/W		0.65 / 0.28 / 0.09	
Thermal Time Constant [Passive cooling / Fan / Fluid]	s		2100 / 500 / 110	
Mechanical Data				
Slider Length	mm	(in)	1790	(70)
Slider Mass	g	(lb)	8413	(18.51)

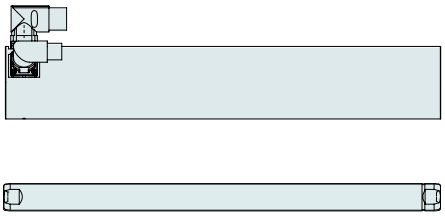

Item	Description	Item-No.
PS10-70x320U-BL-QJ	Stator 3x400VAC, LinMot Encoder	0150-1284
PS10-70x320U-BL-QJ-D01	Stator 3x400VAC, Sin/Cos Encoder 1Vpp, KTY	0150-2285
PS10-70x320U-BL-QJ-D02	Stator 3x400VAC, Sin/Cos Encoder 1Vpp, PTC	0150-2343
PS10-70x320U-BL-QJ-D03	Stator 3x400VAC, Sin/Cos 1Vpp, KTY on power connector	0150-2711
PL10-28x1790/1740	Slider for P10-70 'standard'	0150-2207

P10-70x320U/1530-BL-QJ

Max. Stroke: 1530 mm
Peak Force: 2180 N

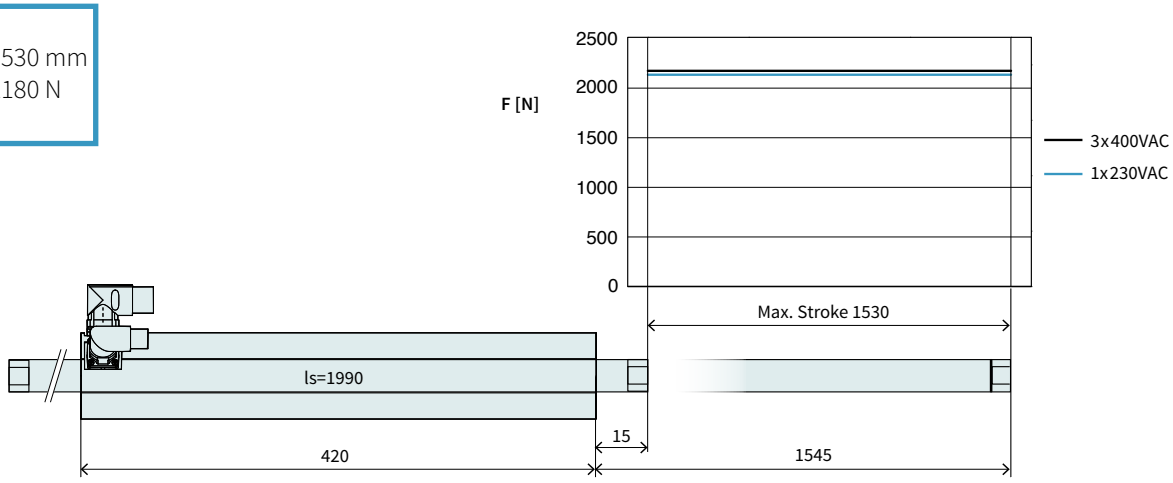

Dimensions in mm

Technical Data P10-70x320U/1530				
Stroke				
Max. Stroke	mm	(in)	1530	(60.2)
Force				
Max. Force @ 1x230VAC	N	(lbf)	2170	(487)
Max. Force @ 3x400VAC	N	(lbf)	2180	(489)
Max. Cont. Force [Passive cooling/ Fan / Fluid]	N	(lbf)	260 / 400 / 700	(58 / 89 / 160)
Max. Border Force relative	%		100	
Force Constant 1	N/A_{pk}	(lbf/A_{pk})	64	(14.4)
Force Constant 2	N/A_{rms}	(lbf/A_{rms})	90.5	(20.3)
Velocity				
Max. Velocity @ 1x230VAC	m/s	(in/s)	2.8	(109.9)
Max. Velocity @ 3x400VAC	m/s	(in/s)	4.9	(4.9)
Position Detection				
Repeatability	mm	(in)	±0.05	(±0.002)
Linearity	%		± 0.15	
Electrical Data				
Max. Current @ 1x230VAC	A_{pk} / A_{rms}		33.7 / 23.8	
Max. Current @ 3x400VAC	A_{pk} / A_{rms}		33.9 / 23.9	
Max. Cont. Current 1 [Passive cooling /Fan / Fluid]	A_{pk}		4.1 / 6.2 / 11	
Max. Cont. Current 2 [Passive cooling /Fan / Fluid]	A_{rms}		2.9 / 4.4 / 7.7	
Thermal Data				
Max. Winding Temperature (Sensor)	°C		90	
Thermal Resistance [Passive cooling / Fan / Fluid]	°K/W		0.65 / 0.28 / 0.09	
Thermal Time Constant [Passive cooling / Fan / Fluid]	s		2100 / 500 / 110	
Mechanical Data				
Slider Length	mm	(in)	1990	(78)
Slider Mass	g	(lb)	9350	(20.57)

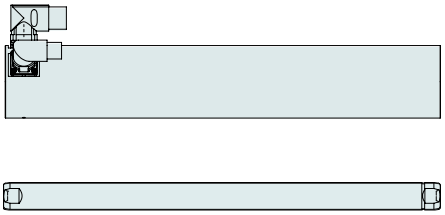

Item	Description	Item-No.
PS10-70x320U-BL-QJ	Stator 3x400VAC, LinMot Encoder	0150-1284
PS10-70x320U-BL-QJ-D01	Stator 3x400VAC, Sin/Cos Encoder 1Vpp, KTY	0150-2285
PS10-70x320U-BL-QJ-D02	Stator 3x400VAC, Sin/Cos Encoder 1Vpp, PTC	0150-2343
PS10-70x320U-BL-QJ-D03	Stator 3x400VAC, Sin/Cos 1Vpp, KTY on power connector	0150-2711
PL10-28x1990/1940	Slider for P10-70 'standard'	0150-2208

Linear Guides H10



HM10-70x320/130	**Linear Module 70x320 with 130 mm Stroke**			
→	H-Guide	H10-70x320/130	H-Guide for P10-70x320, Stroke max. 130 mm	0150-5414
→	Stator	PS10-70x320U-BL-QJ	Stator 3x400VAC, LinMot Encoder	0150-1284
		PS10-70x320U-BL-QJ-D01	Stator 3x400VAC, Sin/Cos Encoder 1Vpp, KTY	0150-2285
		PS10-70x320U-BL-QJ-D02	Stator 3x400VAC, Sin/Cos Encoder 1Vpp, PTC	0150-2343
		PS10-70x320U-BL-QJ-D03	Stator 3x400VAC, Sin/Cos 1Vpp, KTY on power connector	0150-2711
→	Slider	PL10-28x590/540	Slider for P10-70 'standard'	0150-2196
HM10-70x320/230	**Linear Module 70x320 with 230 mm Stroke**			
→	H-Guide	H10-70x320/230	H-Guide for P10-70x320, Stroke max. 230 mm	0150-5415
→	Stator	PS10-70x320U-BL-QJ	Stator 3x400VAC, LinMot Encoder	0150-1284
		PS10-70x320U-BL-QJ-D01	Stator 3x400VAC, Sin/Cos Encoder 1Vpp, KTY	0150-2285
		PS10-70x320U-BL-QJ-D02	Stator 3x400VAC, Sin/Cos Encoder 1Vpp, PTC	0150-2343
		PS10-70x320U-BL-QJ-D03	Stator 3x400VAC, Sin/Cos 1Vpp, KTY on power connector	0150-2711
→	Slider	PL10-28x690/640	Slider for P10-70 'standard'	0150-2197
HM10-70x320/330	**Linear Module 70x320 with 330 mm Stroke**			
→	H-Guide	H10-70x320/330	H-Guide for P10-70x320, Stroke max. 330 mm	0150-5416
→	Stator	PS10-70x320U-BL-QJ	Stator 3x400VAC, LinMot Encoder	0150-1284
		PS10-70x320U-BL-QJ-D01	Stator 3x400VAC, Sin/Cos Encoder 1Vpp, KTY	0150-2285
		PS10-70x320U-BL-QJ-D02	Stator 3x400VAC, Sin/Cos Encoder 1Vpp, PTC	0150-2343
		PS10-70x320U-BL-QJ-D03	Stator 3x400VAC, Sin/Cos 1Vpp, KTY on power connector	0150-2711
→	Slider	PL10-28x790/740	Slider for P10-70 'standard'	0150-2198

FIND MORE PRODUCT DETAILS IN THE CHAPTER "LINEAR GUIDES".

4

HM10-70x320/430	Linear Module 70x320 with 430 mm Stroke		
H-Guide	H10-70x320/430	H-Guide for P10-70x320, Stroke max. 430 mm	0150-5417
Stator	PS10-70x320U-BL-QJ	Stator 3x400VAC, LinMot Encoder	0150-1284
	PS10-70x320U-BL-QJ-D01	Stator 3x400VAC, Sin/Cos Encoder 1Vpp, KTY	0150-2285
	PS10-70x320U-BL-QJ-D02	Stator 3x400VAC, Sin/Cos Encoder 1Vpp, PTC	0150-2343
	PS10-70x320U-BL-QJ-D03	Stator 3x400VAC, Sin/Cos 1Vpp, KTY on power connector	0150-2711
Slider	PL10-28x890/840	Slider for P10-70 'standard'	0150-2199

HM10-70x320/530	Linear Module 70x320 with 530 mm Stroke		
H-Guide	H10-70x320/530	H-Guide for P10-70x320, Stroke max. 530 mm	0150-5418
Stator	PS10-70x320U-BL-QJ	Stator 3x400VAC, LinMot Encoder	0150-1284
	PS10-70x320U-BL-QJ-D01	Stator 3x400VAC, Sin/Cos Encoder 1Vpp, KTY	0150-2285
	PS10-70x320U-BL-QJ-D02	Stator 3x400VAC, Sin/Cos Encoder 1Vpp, PTC	0150-2343
	PS10-70x320U-BL-QJ-D03	Stator 3x400VAC, Sin/Cos 1Vpp, KTY on power connector	0150-2711
Slider	PL10-28x990/940	Slider for P10-70 'standard'	0150-2203

Accessories			
Fan	HV01-37/48	Fan cooling for H01-37/48 &PF02-37/48	0150-5051

Motor Cable

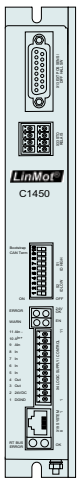

C1400

B Connector MC10-B/m

Q Connector MC10-Q/f

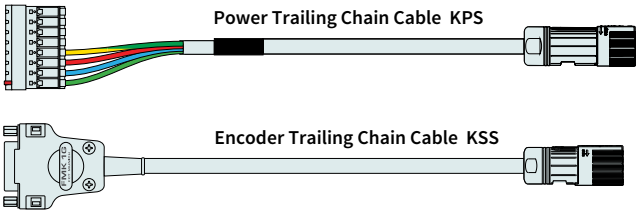



P10-70x320U

D15 Connector MC01-D15/f

J Connector MC10-J/f



E1400

L Connector MC10-L/m

Q Connector MC10-Q/f

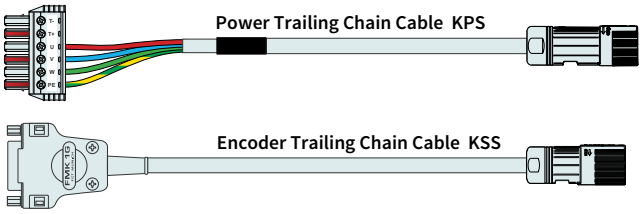



P10-70x320U

D15 Connector MC01-D15/f

J Connector MC10-J/f

ORDERING INFORMATION

TRAILING CHAIN CABLE FOR LINMOT DRIVES		
Item	**Description**	**Item-No.**
KPS15-04-L/Q-3	Power Trailing Chain Cable E1400/P10-70, 3 m	0150-2266
KPS15-04-L/Q-5	Power Trailing Chain Cable E1400/P10-70, 5 m	0150-2261
KPS15-04-L/Q-8	Power Trailing Chain Cable E1400/P10-70, 8 m	0150-2267
KPS15-04-L/Q-12	Power Trailing Chain Cable E1400/P10-70, 12 m	0150-2268
KPS15-04-L/Q-	Power Trailing Chain Cable L/Q-, Custom length	0150-3388
KPS15-04-B/Q-3	Power Trailing Chain Cable C1400/P10-70, 3 m	0150-3660
KPS15-04-B/Q-5	Power Trailing Chain Cable C1400/P10-70, 5 m	0150-3661
KPS15-04-B/Q-8	Power Trailing Chain Cable C1400/P10-70, 8 m	0150-3662
KPS15-04-B/Q-12	Power Trailing Chain Cable C1400/P10-70, 12 m	0150-3663
KPS15-04-B/Q-	Power Trailing Chain Cable B/Q-, Custom length	0150-3608

4

TRAILING CHAIN CABLE FOR LINMOT DRIVES		
Item	**Description**	**Item-No.**
KSS 05-02/08-D15/J-3	Encoder Trailing Chain Cable D15/J, 3 m	0150-2263
KSS 05-02/08-D15/J-5	Encoder Trailing Chain Cable D15/J, 5 m	0150-2262
KSS 05-02/08-D15/J-8	Encoder Trailing Chain Cable D15/J, 8 m	0150-2264
KSS 05-02/08-D15/J-12	Encoder Trailing Chain Cable D15/J, 12 m	0150-2265
KSS 05-02/08-D15(f)-45°/J-	Encoder Trailing Chain Cable D15/J-, Custom length	0150-3389

TRAILING CHAIN CABLE FOR STATOR SERIES D03		
Item	**Description**	**Item-No.**
KPS15-04/04..../Q-10	Power Trailing Chain Cable .../Q, 10 m for D03	0150-3654
KPS15-04/04-./Q-	Power Trailing Chain Cable .../Q, for D03, Custom length	0150-3579
KSS05-02/06-./J-10	Encoder Trailing Chain Cable ./J, 10 m for D03	0150-3655
KSS05-02/06-./J-	Encoder Trailing Chain Cable ./J, for D03, Custom length	0150-3611
KPS15-04/04	Power Trailing Chain Cable P10-...-Dx3 (per m)	0150-2269
KSS05-02/06	Trailing Chain Cable Encoder P10-...-Dx3 (per m)	0150-2490

CONNECTOR		
Item	**Description**	**Item-No.**
MC10-L/m	Connector Power E1400/X2	0150-3382
MC01-D15/f	Motor Connector D15 (f)	0150-3136
MC10-Q/f	Connector Power PS10-70	0150-2268
MC10-J/f	Connector Encoder PS10-70	0150-2269

MOTOR FLANGES



Item	Description	Item-No.
PF10-70x350	Flange for PS10-70x320	0150-2290



Item	Description	Item-No.
PF10-70x350-FC	Flange for PS10-70x320 fluid cooling	0150-2294

FIND MORE PRODUCT DETAILS IN THE CHAPTER "ACCESSORIES".

FANS



Item	Description	Item-No.
HV01-37/48	Fan cooling for H01-37/48 &PF02-37/48	0150-5051

FIND MORE PRODUCT DETAILS IN THE CHAPTER "ACCESSORIES".

SLIDER MOUNTING



Item	Description	Item-No.
PLF01-28	Fixed Bearing Set for 27/28 mm sliders	0150-3087
PLF01-28-SS	Fixed Bearing Set for 27/28 mm sliders, stainless steel	0150-3297
PLL01-28	Floating Bearing for 28 mm sliders	0150-3094
PLM01-28-MK	Mounting Kit for 28 mm sliders	0150-3095

FIND MORE PRODUCT DETAILS IN THE CHAPTER "ACCESSORIES".

BEARING KIT



Item	Description	Item-No.
PB10-70x320-L	Bearing Kit for PS10-70x320	0150-3434

FIND MORE PRODUCT DETAILS IN THE CHAPTER "ACCESSORIES".

LUBRICANT RESERVOIR



Item	Description	Item-No.
PA10-70/28	Lubricant reservoir for PS10-70 with lubricating nipple	0150-3543

FIND MORE PRODUCT DETAILS IN THE CHAPTER "ACCESSORIES".

EXTERNAL POSITION SENSORS



Item	Description	Item-No.
MS01-1/D	Linear Encoder 1µm, A/B (for incremental strip)	0150-1840
MB01-1000	Magnetic incremental strip for MS01-1/D, per cm	0150-1963
KS025-D15/D-Encoder	Encoder Cable (Length in m)	0150-3168

FIND MORE PRODUCT DETAILS IN THE CHAPTER "ACCESSORIES".



Item	Description	Item-No.
MS01-1/D-SSI	Linear Encoder 1µm, A/B (for absolute strip)	0150-2095
MB01-1000-ABS	Magnetic absolute strip for MS01-1/D-SSI (per cm)	0150-2096
EC01-ABS/ENC-12-S	MS01-1/D-SSI Encoder connector straight	0150-3616
KSS01-12-D15/ABS-ENC	Special cable for MS01-1/D-SSI on C1100/C1200/C1400/E1200/E1400 Drives	0150-3652

FIND MORE PRODUCT DETAILS IN THE CHAPTER "ACCESSORIES".

LINEAR MOTORS P10-70x400U



- 3 x 400VAC Technology
- Peak forces up to 2720 N
- Extremely high dynamic
- Separate connector for sensor and power cable
- Can also be controlled by standard third-party servo drives

4

LINEAR MOTORS P10-70x400U

Technical Data ____ **597**

Motor Specifications

P10-70x400U/50 ..... **602**

P10-70x400U/150 ..... **603**

P10-70x400U/250 ..... **604**

P10-70x400U/350 ..... **605**

P10-70x400U/450 ..... **606**

P10-70x400U/650 ..... **607**

P10-70x400U/850 ..... **608**

P10-70x400U/1050 ..... **609**

P10-70x400U/1250 ..... **610**

P10-70x400U/1450 ..... **611**

Linear Guides ____ **612**

Accessories ____ **614**



MOTOR FAMILY P10-70x400U

Technical Data				
Stroke				
Max. Stroke (ES)	mm	(in)	1450	(57.1)
Force				
Max. Force @ 1x230VAC	N	(lbf)	2150	(483)
Max. Force @ 3x400VAC	N	(lbf)	2720	(611)
Max. Cont. Force [Passive cooling/ Fan / Fluid]	N	(lbf)	320 / 500 / 890	(73 / 110 / 200)
Max. Border Force relative	%		100	
Force Constant 1	N/A_{pk}	(lbf/A_{pk})	80	(18)
Force Constant 2	N/A_{rms}	(lbf/A_{rms})	113	(25.4)
Velocity				
Max. Velocity @ 1x230VAC	m/s	(in/s)	2.2	(89.9)
Max. Velocity @ 3x400VAC	m/s	(in/s)	3.9	(159.9)
Position Detection				
Position Resolution	mm	(in)	0.005	(0.0002)
Repeatability	mm	(in)	±0.05	(±0.002)
Position Resolution with ES	mm	(in)	0.001	(0.00004)
Repeatability with ES	mm	(in)	±0.01	(±0.0004)
Linearity with ES	mm	(in)	±0.01	(±0.0004)
Electrical Data				
Max. Current @ 1x230VAC	A_{pk} / A_{rms}		26.8 / 18.9	
Max. Current @ 3x400VAC	A_{pk} / A_{rms}		33.9 / 23.9	
Max. Cont. Current 1 [Passive cooling /Fan / Fluid]	A_{pk}		4 / 6.2 / 11	
Max. Cont. Current 2 [Passive cooling /Fan / Fluid]	A_{rms}		2.9 / 4.4 / 7.9	
Back EMF Constant	V_{pk} / (m/s)	(V_{pk} / (in/s))	92.4	(2.35)
Terminal Resistance 25 °C / 120 °C	Ohm		6.9 / 9.5	
Terminal Inductivity	mH		13	
Magnetic Period	mm	(in)	40	(1.57)
Thermal Data				
Max. Winding Temperature (Sensor)	°C		90	
Thermal Resistance [Passive cooling / Fan / Fluid]	°K/W		0.52 / 0.22 / 0.068	
Thermal Time Constant [Passive cooling / Fan / Fluid]	s		2100 / 500 / 100	
Mechanical Data				
Stator Diameter	mm	(in)	70	(2.8)
Stator Length	mm	(in)	500	(20)
Stator Mass	g	(lb)	8250	(18.15)
Slider Diameter	mm	(in)	28	(1.1)
Slider Length	mm	(in)	590 - 1990	(23 - 78)
Slider Mass	g	(lb)	2770 - 9350	(6.09 - 20.57)
IP Code			IP 65	
Certification				
UL	File-No.		E354430	

4

STATOR

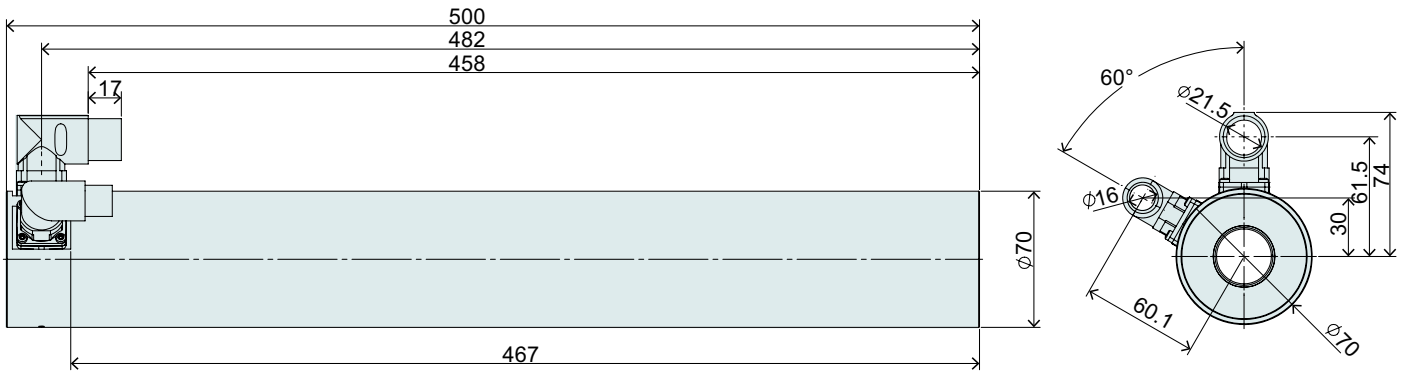

Item	Description	Item-No.
PS10-70x400U-BL-QJ	Stator 3x400VAC, LinMot Encoder	0150-1294
PS10-70x400U-BL-QJ-D01	Stator 3x400VAC, Sin/Cos Encoder 1Vpp, KTY	0150-2286
PS10-70x400U-BL-QJ-D02	Stator 3x400VAC, Sin/Cos Encoder 1Vpp, PTC	0150-2363
PS10-70x400U-BL-QJ-D03	Stator 3x400VAC, Sin/Cos 1Vpp, KTY on power connector	0150-2712

CONNECTOR PS10-70x400U-BL-QJ

Motor Connector Wiring		Connector Encoder J	Wire Color Motor Cable
+5 VDC	Supply	1	red
GND	Supply	2	black
Sense +5V	Supply Sense	3	white
Sense GND	Supply Sense	4	brown
Mot. Link C+	Communication	5	pink
Mot. Link C-	Communication	6	grey
Sin+	Encoder	7	yellow
Sin-	Encoder	8	orange
Cos+	Encoder	9	green
Cos-	Encoder	10	blue
n. c.	n. c.	11	n. c.
n. c.	n. c.	12	n. c.
n. c.	n. c.	13	n. c.
n. c.	n. c.	14	n. c.
n. c.	n. c.	15	n. c.
n. c.	n. c.	16	n. c.
n. c.	n. c.	17	n. c.

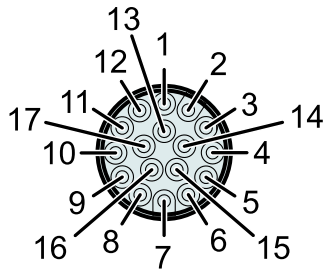

Connector Encoder J

View: Motor connector, plug side

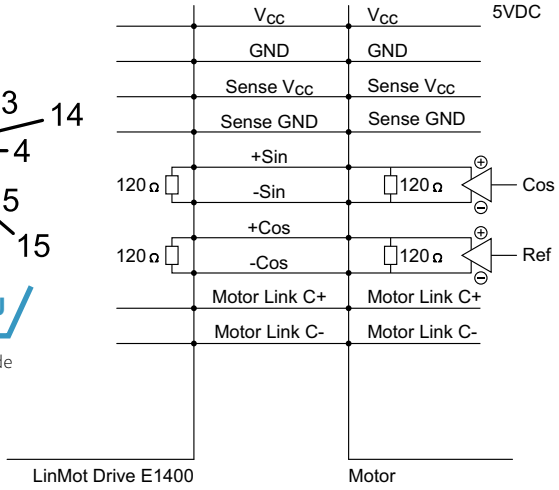

Motor Connector Wiring	Connector Power Q	Wire Color Motor Cable
Phase U	1	red
PE	2	yellow-green
Phase W	3	green
Phase V	4	blue
n. c.	A	n. c.
n. c.	B	n. c.
n. c.	C	n. c.
n. c.	D	n. c.

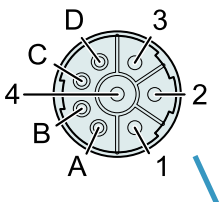

Connector Power Q

View: Motor connector, plug side

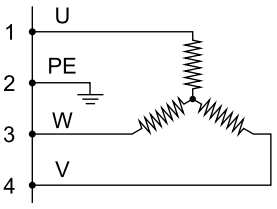

CONNECTOR PS10-70x400U-BL-QJ-D01/02

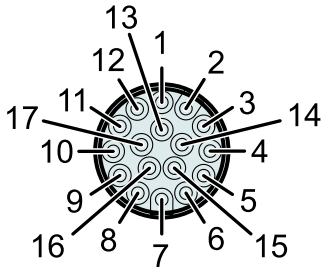

Connector Encoder J

View: Motor connector, plug side

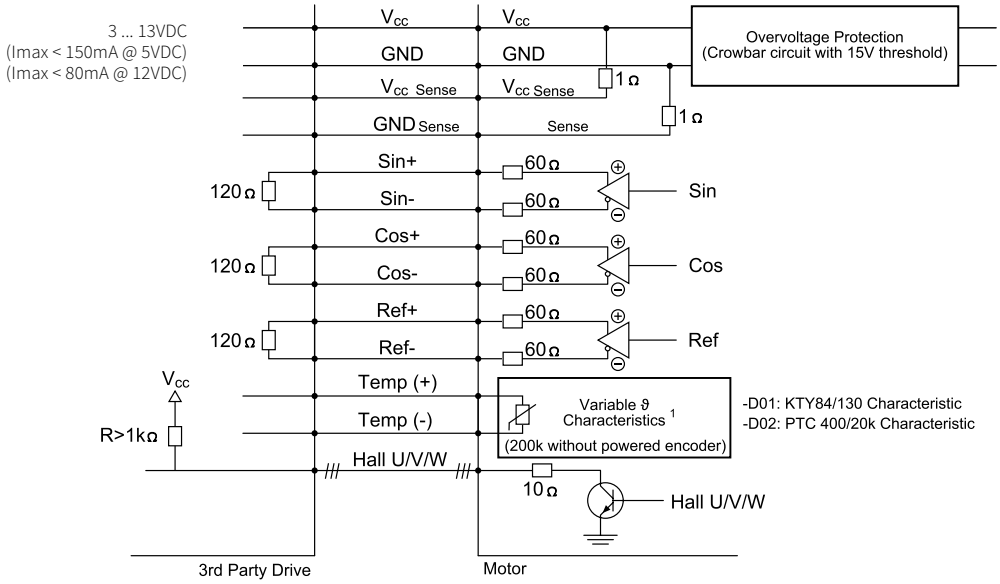

Motor Connector Wiring				
PS10-70x400U-BL-QJ-D01	PS10-70x400U-BL-QJ-D02	Function	Connector Encoder J	Wire Color Motor Cable
3 ... 13 VDC	3 ... 13 VDC	Supply	1	white
GND	GND	Supply	2	brown
Vcc Sense (optional)	Vcc Sense (optional)	Supply Sense	3	green
GND Sense (optional)	GND Sense (optional)	Supply Sense	4	yellow
Do not connect	Do not connect	–	5	–
Do not connect	Do not connect	–	6	–
Sin+	Sin+	Encoder 1 Vpp	7	grey
Sin-	Sin-	Encoder 1 Vpp	8	pink
Cos+	Cos+	Encoder 1 Vpp	9	blue
Cos-	Cos-	Encoder 1 Vpp	10	red
Ref+	Ref+	Encoder 1 Vpp	11	black
Ref-	Ref-	Encoder 1 Vpp	12	violett
Hall U	Hall U	Encoder (open collector)	13	grey-red
Hall V	Hall V	Encoder (open collector)	14	red-blue
Hall W	Hall W	Encoder (open collector)	15	white-green
Temp+ (KTY84/130 Char.)	Temp+ (PTC 400/20k Char.)	Temperature[1]	16	yellow-brown
Temp- (KTY84/130 Char.)	Temp- (PTC 400/20k Char.)	Temperature[1]	17	white-yellow

1) The temperature evaluation circiut must be powered from the encoder supply and must be at the same potential. The grounds of the temperature evaluation circuit and the encoder have to be connected. The encoder must have been powered on for at least 50 ms, before valid temperatures can be measured. If the encoder is powered off, 200k Ohms are measured between Pins 16 and 17. The maximum voltage between Pin 16 and 17 must not exceed 16 VDC. The maximum current must not exceed 15 mA.

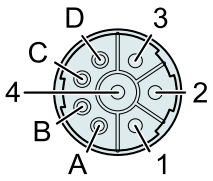

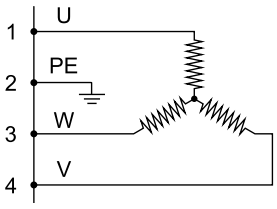

Connector Power Q

View: Motor connector, plug side

Mtotor Steckerbelegung			
PS10-70x400U-BL-QJ-D01	PS10-70x400U-BL-QJ-D02	Wire Color Motor Cable	Connector Power Q
Phase U	Phase U	red	1
PE	PE	yellow-green	2
Phase W	Phase W	green	3
Phase V	Phase V	blue	4
n. c.	n. c.	n. c.	A
n. c.	n. c.	n. c.	B
n. c.	n. c.	n. c.	C
n. c.	n. c.	n. c.	D

CONNECTOR PS10-70x400U-BL-QJ-D03

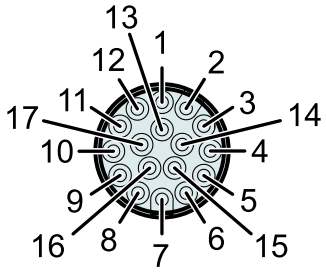

Connector Encoder J

View: Motor connector, plug side

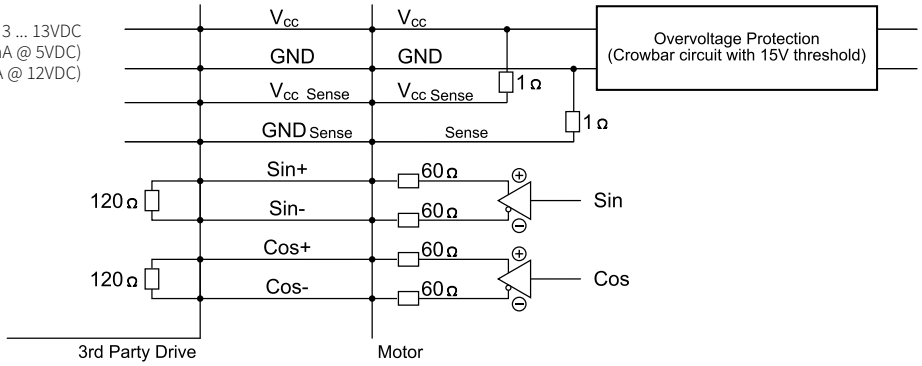

Motor Connector Wiring		Wire Color Motor Cable	Connector Encoder J
3 ... 13 VDC	Supply	red	1
GND	Supply	black	2
Vcc Sense (optional)	Supply Sense	white	3
GND Sense (optional)	Supply Sense	brown	4
Do not connect	–	–	5
Do not connect	–	–	6
Sin+	Encoder 1 Vpp	yellow	7
Sin-	Encoder 1 Vpp	orange	8
Cos+	Encoder 1 Vpp	green	9
Cos-	Encoder 1 Vpp	blue	10
n. c.	–	n. c.	11
n. c.	–	n. c.	12
n. c.	–	n. c.	13
Do not connect	–	n. c.	14
n. c.	–	n. c.	15
n. c.	–	n. c.	16
n. c.	–	n. c.	17

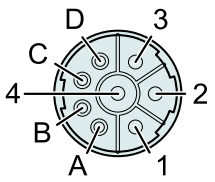

Connector Power Q

View: Motor connector, plug side

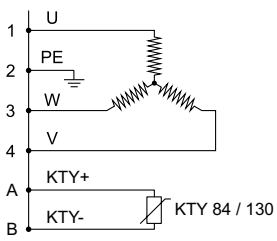

Motor Connector Wiring	Connector Power Q	Wire Color Motor Cable
Phase U	1	red (previously: black 1)
PE	2	yellow-green
Phase W	3	green (previously: black 3)
Phase V	4	blue (previously: black 2)
KTY +	A	purple (previously: black 5)
KTY -	B	grey (previously: black 6)
n. c.	C	yellow (previously: black 7)
n. c.	D	brown (previously: black 8)

SLIDER

Slider Standard

Number of grooves determines the slider type
(see chapter 2 / slider) and marks the front end.

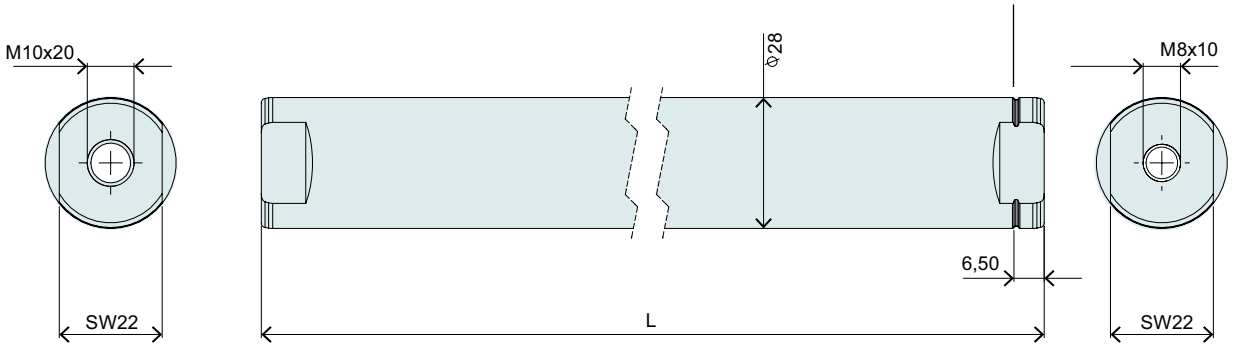

Slider Standard			
Item	Description	Max. Stroke [mm]	Item-No.
PL10-28x590/540	Slider for P10-70 'standard'	50	0150-2196
PL10-28x690/640	Slider for P10-70 'standard'	150	0150-2197
PL10-28x790/740	Slider for P10-70 'standard'	250	0150-2198
PL10-28x890/840	Slider for P10-70 'standard'	350	0150-2199
PL10-28x990/940	Slider for P10-70 'standard'	450	0150-2203
PL10-28x1190/1140	Slider for P10-70 'standard'	650	0150-2204
PL10-28x1390/1340	Slider for P10-70 'standard'	850	0150-2205
PL10-28x1590/1540	Slider for P10-70 'standard'	1050	0150-2206
PL10-28x1790/1740	Slider for P10-70 'standard'	1250	0150-2207
PL10-28x1990/1940	Slider for P10-70 'standard'	1450	0150-2208

P10-70x400U/50-BL-QJ

Max. Stroke: 50 mm
Peak Force: 2720 N

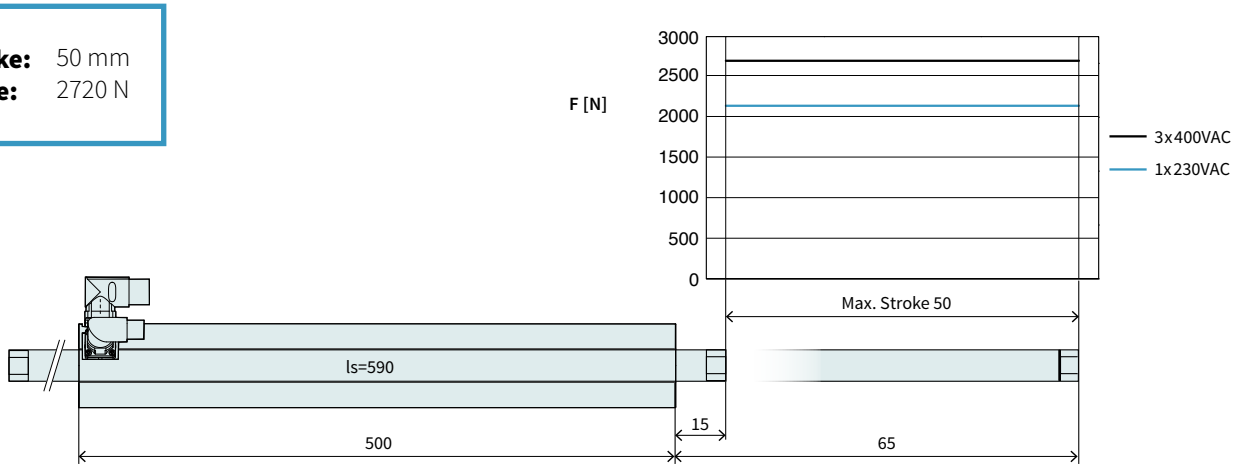

Dimensions in mm

Technical Data P10-70x400U/50				
Stroke				
Max. Stroke	mm	(in)	50	(1.96)
Force				
Max. Force @ 1x230VAC	N	(lbf)	2150	(483)
Max. Force @ 3x400VAC	N	(lbf)	2720	(611)
Max. Cont. Force [Passive cooling/ Fan / Fluid]	N	(lbf)	320 / 500 / 890	(73 / 110 / 200)
Max. Border Force relative	%		100	
Force Constant 1	N/A_{pk}	(lbf/A_{pk})	80	(18)
Force Constant 2	N/A_{rms}	(lbf/A_{rms})	113	(25.4)
Velocity				
Max. Velocity @ 1x230VAC	m/s	(in/s)	2.2	(89.9)
Max. Velocity @ 3x400VAC	m/s	(in/s)	3.9	(3.9)
Position Detection				
Repeatability	mm	(in)	±0.05	(±0.002)
Linearity	%		± 1.1	
Electrical Data				
Max. Current @ 1x230VAC	A_{pk} / A_{rms}		26.8 / 18.9	
Max. Current @ 3x400VAC	A_{pk} / A_{rms}		33.9 / 23.9	
Max. Cont. Current 1 [Passive cooling /Fan / Fluid]	A_{pk}		4 / 6.2 / 11	
Max. Cont. Current 2 [Passive cooling /Fan / Fluid]	A_{rms}		2.9 / 4.4 / 7.9	
Thermal Data				
Max. Winding Temperature (Sensor)	°C		90	
Thermal Resistance [Passive cooling / Fan / Fluid]	°K/W		0.52 / 0.22 / 0.068	
Thermal Time Constant [Passive cooling / Fan / Fluid]	s		2100 / 500 / 100	
Mechanical Data				
Slider Length	mm	(in)	590	(23)
Slider Mass	g	(lb)	2770	(6.09)

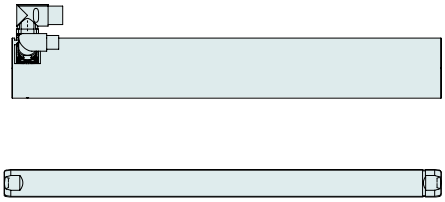

Item	Description	Item-No.
PS10-70x400U-BL-QJ	Stator 3x400VAC, LinMot Encoder	0150-1294
PS10-70x400U-BL-QJ-D01	Stator 3x400VAC, Sin/Cos Encoder 1Vpp, KTY	0150-2286
PS10-70x400U-BL-QJ-D02	Stator 3x400VAC, Sin/Cos Encoder 1Vpp, PTC	0150-2363
PS10-70x400U-BL-QJ-D03	Stator 3x400VAC, Sin/Cos 1Vpp, KTY on power connector	0150-2712
PL10-28x590/540	Slider for P10-70 'standard'	0150-2196

P10-70x400U/150-BL-QJ

Max. Stroke: 150 mm
Peak Force: 2720 N

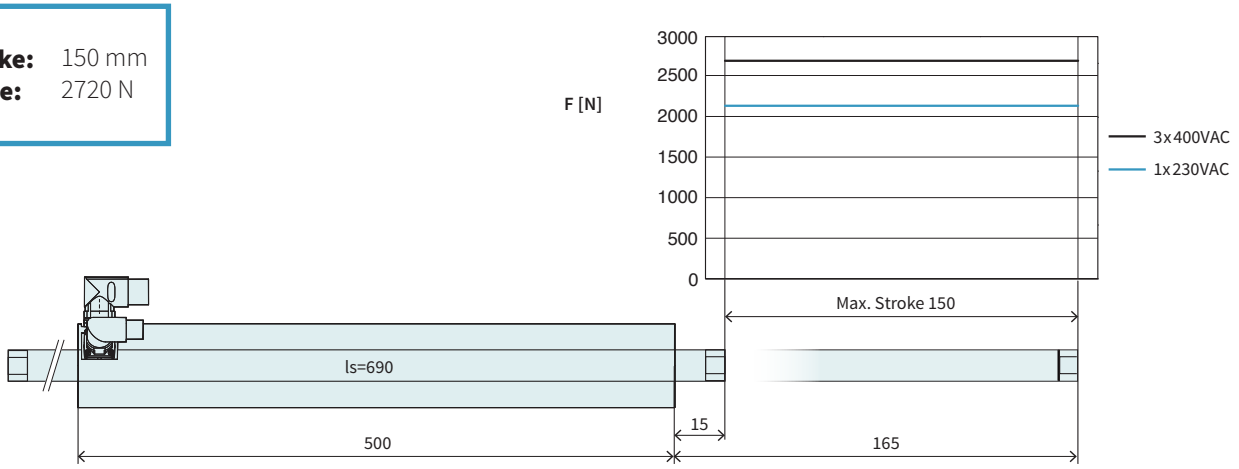

Dimensions in mm

Technical Data P10-70x400U/150				
Stroke				
Max. Stroke	mm	(in)	150	(5.91)
Force				
Max. Force @ 1x230VAC	N	(lbf)	2150	(483)
Max. Force @ 3x400VAC	N	(lbf)	2720	(611)
Max. Cont. Force [Passive cooling/ Fan / Fluid]	N	(lbf)	320 / 500 / 890	(73 / 110 / 200)
Max. Border Force relative	%		100	
Force Constant 1	N/A_{pk}	(lbf/A_{pk})	80	(18)
Force Constant 2	N/A_{rms}	(lbf/A_{rms})	113	(25.4)
Velocity				
Max. Velocity @ 1x230VAC	m/s	(in/s)	2.2	(89.9)
Max. Velocity @ 3x400VAC	m/s	(in/s)	3.9	(3.9)
Position Detection				
Repeatability	mm	(in)	±0.05	(±0.002)
Linearity	%		± 0.45	
Electrical Data				
Max. Current @ 1x230VAC	A_{pk} / A_{rms}		26.8 / 18.9	
Max. Current @ 3x400VAC	A_{pk} / A_{rms}		33.9 / 23.9	
Max. Cont. Current 1 [Passive cooling /Fan / Fluid]	A_{pk}		4 / 6.2 / 11	
Max. Cont. Current 2 [Passive cooling /Fan / Fluid]	A_{rms}		2.9 / 4.4 / 7.9	
Thermal Data				
Max. Winding Temperature (Sensor)	°C		90	
Thermal Resistance [Passive cooling / Fan / Fluid]	°K/W		0.52 / 0.22 / 0.068	
Thermal Time Constant [Passive cooling / Fan / Fluid]	s		2100 / 500 / 100	
Mechanical Data				
Slider Length	mm	(in)	690	(27)
Slider Mass	g	(lb)	3240	(7.13)

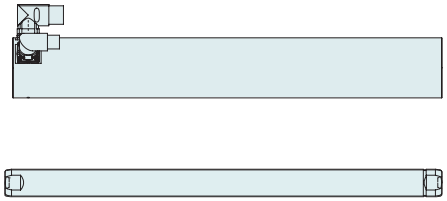

Item	Description	Item-No.
PS10-70x400U-BL-QJ	Stator 3x400VAC, LinMot Encoder	0150-1294
PS10-70x400U-BL-QJ-D01	Stator 3x400VAC, Sin/Cos Encoder 1Vpp, KTY	0150-2286
PS10-70x400U-BL-QJ-D02	Stator 3x400VAC, Sin/Cos Encoder 1Vpp, PTC	0150-2363
PS10-70x400U-BL-QJ-D03	Stator 3x400VAC, Sin/Cos 1Vpp, KTY on power connector	0150-2712
PL10-28x690/640	Slider for P10-70 'standard'	0150-2197

P10-70x400U/250-BL-QJ

Max. Stroke: 250 mm
Peak Force: 2720 N



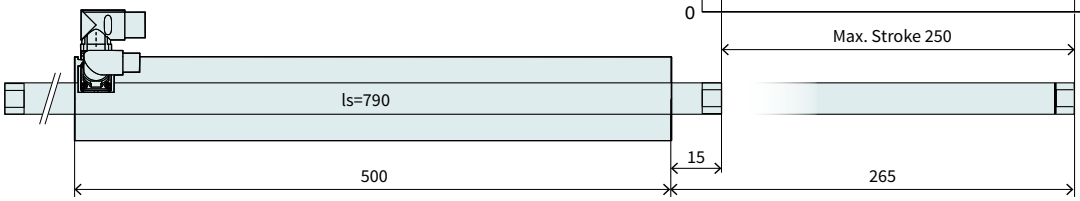

Dimensions in mm

Technical Data P10-70x400U/250				
Stroke				
Max. Stroke	mm	(in)	250	(9.83)
Force				
Max. Force @ 1x230VAC	N	(lbf)	2150	(483)
Max. Force @ 3x400VAC	N	(lbf)	2720	(611)
Max. Cont. Force [Passive cooling/ Fan / Fluid]	N	(lbf)	320 / 500 / 890	(73 / 110 / 200)
Max. Border Force relative	%		100	
Force Constant 1	N/A_{pk}	(lbf/A_{pk})	80	(18)
Force Constant 2	N/A_{rms}	(lbf/A_{rms})	113	(25.4)
Velocity				
Max. Velocity @ 1x230VAC	m/s	(in/s)	2.2	(89.9)
Max. Velocity @ 3x400VAC	m/s	(in/s)	3.9	(3.9)
Position Detection				
Repeatability	mm	(in)	±0.05	(±0.002)
Linearity	%		± 0.3	
Electrical Data				
Max. Current @ 1x230VAC	A_{pk} / A_{rms}		26.8 / 18.9	
Max. Current @ 3x400VAC	A_{pk} / A_{rms}		33.9 / 23.9	
Max. Cont. Current 1 [Passive cooling /Fan / Fluid]	A_{pk}		4 / 6.2 / 11	
Max. Cont. Current 2 [Passive cooling /Fan / Fluid]	A_{rms}		2.9 / 4.4 / 7.9	
Thermal Data				
Max. Winding Temperature (Sensor)	°C		90	
Thermal Resistance [Passive cooling / Fan / Fluid]	°K/W		0.52 / 0.22 / 0.068	
Thermal Time Constant [Passive cooling / Fan / Fluid]	s		2100 / 500 / 100	
Mechanical Data				
Slider Length	mm	(in)	790	(31)
Slider Mass	g	(lb)	3710	(8.16)





Item	Description	Item-No.
PS10-70x400U-BL-QJ	Stator 3x400VAC, LinMot Encoder	0150-1294
PS10-70x400U-BL-QJ-D01	Stator 3x400VAC, Sin/Cos Encoder 1Vpp, KTY	0150-2286
PS10-70x400U-BL-QJ-D02	Stator 3x400VAC, Sin/Cos Encoder 1Vpp, PTC	0150-2363
PS10-70x400U-BL-QJ-D03	Stator 3x400VAC, Sin/Cos 1Vpp, KTY on power connector	0150-2712
PL10-28x790/740	Slider for P10-70 'standard'	0150-2198

P10-70x400U/350-BL-QJ

Max. Stroke: 350 mm
Peak Force: 2720 N

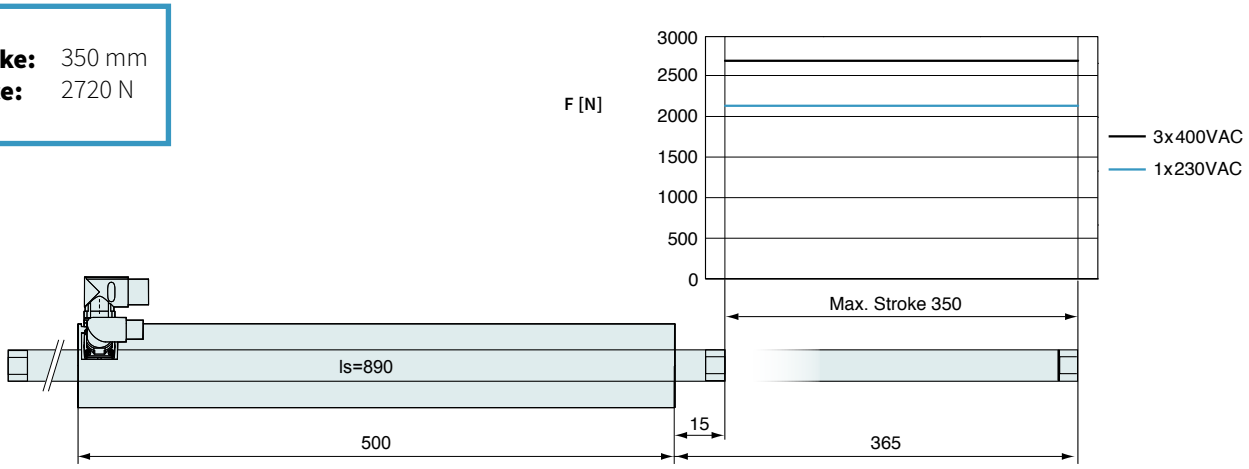

Dimensions in mm

Technical Data P10-70x400U/350				
Stroke				
Max. Stroke	mm	(in)	350	(13.8)
Force				
Max. Force @ 1x230VAC	N	(lbf)	2150	(483)
Max. Force @ 3x400VAC	N	(lbf)	2720	(611)
Max. Cont. Force [Passive cooling/ Fan / Fluid]	N	(lbf)	320 / 500 / 890	(73 / 110 / 200)
Max. Border Force relative	%		100	
Force Constant 1	N/A_{pk}	(lbf/A_{pk})	80	(18)
Force Constant 2	N/A_{rms}	(lbf/A_{rms})	113	(25.4)
Velocity				
Max. Velocity @ 1x230VAC	m/s	(in/s)	2.2	(89.9)
Max. Velocity @ 3x400VAC	m/s	(in/s)	3.9	(3.9)
Position Detection				
Repeatability	mm	(in)	±0.05	(±0.002)
Linearity	%		± 0.25	
Electrical Data				
Max. Current @ 1x230VAC	A_{pk} / A_{rms}		26.8 / 18.9	
Max. Current @ 3x400VAC	A_{pk} / A_{rms}		33.9 / 23.9	
Max. Cont. Current 1 [Passive cooling /Fan / Fluid]	A_{pk}		4 / 6.2 / 11	
Max. Cont. Current 2 [Passive cooling /Fan / Fluid]	A_{rms}		2.9 / 4.4 / 7.9	
Thermal Data				
Max. Winding Temperature (Sensor)	°C		90	
Thermal Resistance [Passive cooling / Fan / Fluid]	°K/W		0.52 / 0.22 / 0.068	
Thermal Time Constant [Passive cooling / Fan / Fluid]	s		2100 / 500 / 100	
Mechanical Data				
Slider Length	mm	(in)	890	(35)
Slider Mass	g	(lb)	4180	(9.2)

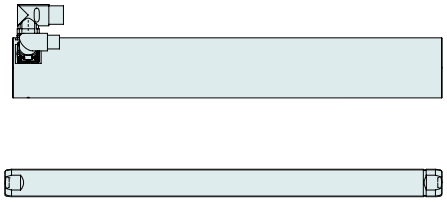

Item	Description	Item-No.
PS10-70x400U-BL-QJ	Stator 3x400VAC, LinMot Encoder	0150-1294
PS10-70x400U-BL-QJ-D01	Stator 3x400VAC, Sin/Cos Encoder 1Vpp, KTY	0150-2286
PS10-70x400U-BL-QJ-D02	Stator 3x400VAC, Sin/Cos Encoder 1Vpp, PTC	0150-2363
PS10-70x400U-BL-QJ-D03	Stator 3x400VAC, Sin/Cos 1Vpp, KTY on power connector	0150-2712
PL10-28x890/840	Slider for P10-70 'standard'	0150-2199

P10-70x400U/450-BL-QJ

Max. Stroke: 450 mm
Peak Force: 2720 N

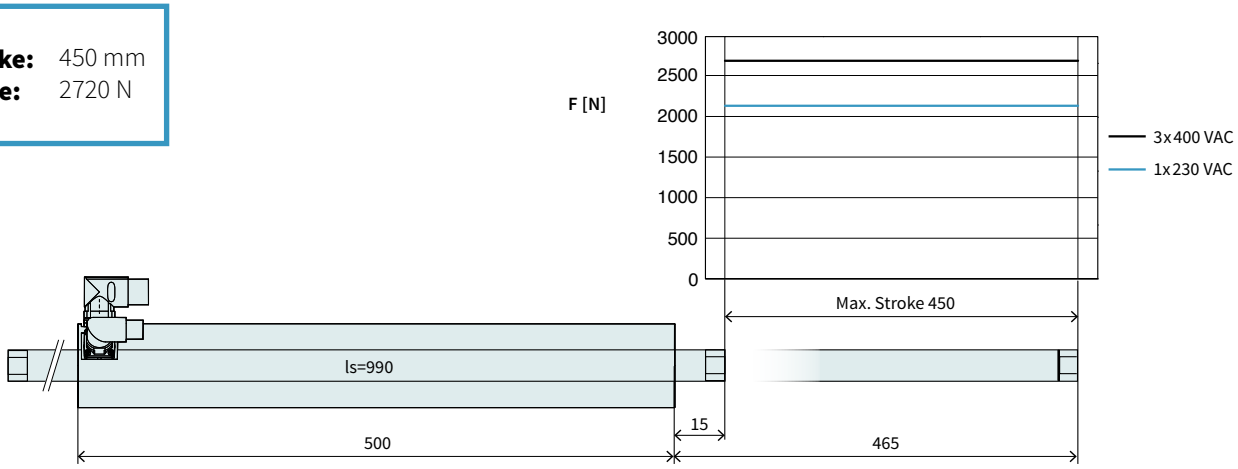

Dimensions in mm

Technical Data P10-70x400U/450				
Stroke				
Max. Stroke	mm	(in)	450	(17.69)
Force				
Max. Force @ 1x230VAC	N	(lbf)	2150	(483)
Max. Force @ 3x400VAC	N	(lbf)	2720	(611)
Max. Cont. Force [Passive cooling/ Fan / Fluid]	N	(lbf)	320 / 500 / 890	(73 / 110 / 200)
Max. Border Force relative	%		100	
Force Constant 1	N/A_{pk}	(lbf/A_{pk})	80	(18)
Force Constant 2	N/A_{rms}	(lbf/A_{rms})	113	(25.4)
Velocity				
Max. Velocity @ 1x230VAC	m/s	(in/s)	2.2	(89.9)
Max. Velocity @ 3x400VAC	m/s	(in/s)	3.9	(3.9)
Position Detection				
Repeatability	mm	(in)	±0.05	(±0.002)
Linearity	%		± 0.2	
Electrical Data				
Max. Current @ 1x230VAC	A_{pk} / A_{rms}		26.8 / 18.9	
Max. Current @ 3x400VAC	A_{pk} / A_{rms}		33.9 / 23.9	
Max. Cont. Current 1 [Passive cooling /Fan / Fluid]	A_{pk}		4 / 6.2 / 11	
Max. Cont. Current 2 [Passive cooling /Fan / Fluid]	A_{rms}		2.9 / 4.4 / 7.9	
Thermal Data				
Max. Winding Temperature (Sensor)	°C		90	
Thermal Resistance [Passive cooling / Fan / Fluid]	°K/W		0.52 / 0.22 / 0.068	
Thermal Time Constant [Passive cooling / Fan / Fluid]	s		2100 / 500 / 100	
Mechanical Data				
Slider Length	mm	(in)	990	(39)
Slider Mass	g	(lb)	4650	(10.23)





Item	Description	Item-No.
PS10-70x400U-BL-QJ	Stator 3x400VAC, LinMot Encoder	0150-1294
PS10-70x400U-BL-QJ-D01	Stator 3x400VAC, Sin/Cos Encoder 1Vpp, KTY	0150-2286
PS10-70x400U-BL-QJ-D02	Stator 3x400VAC, Sin/Cos Encoder 1Vpp, PTC	0150-2363
PS10-70x400U-BL-QJ-D03	Stator 3x400VAC, Sin/Cos 1Vpp, KTY on power connector	0150-2712
PL10-28x990/940	Slider for P10-70 'standard'	0150-2203

P10-70x400U/650-BL-QJ

Max. Stroke: 650 mm
Peak Force: 2720 N

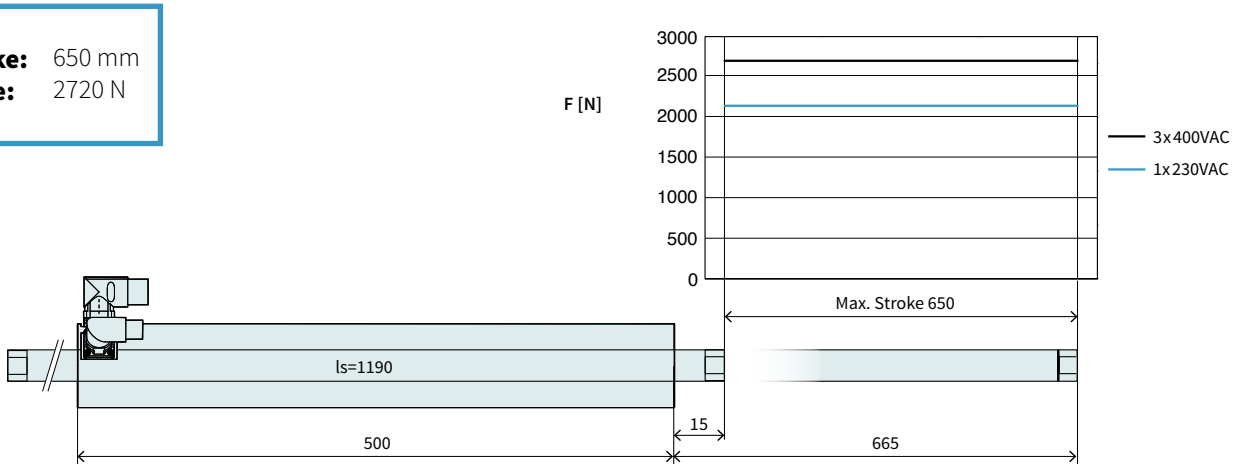

Dimensions in mm

Technical Data P10-70x400U/650				
Stroke				
Max. Stroke	mm	(in)	650	(25.6)
Force				
Max. Force @ 1x230VAC	N	(lbf)	2150	(483)
Max. Force @ 3x400VAC	N	(lbf)	2720	(611)
Max. Cont. Force [Passive cooling/ Fan / Fluid]	N	(lbf)	320 / 500 / 890	(73 / 110 / 200)
Max. Border Force relative	%		100	
Force Constant 1	N/A_{pk}	(lbf/A_{pk})	80	(18)
Force Constant 2	N/A_{rms}	(lbf/A_{rms})	113	(25.4)
Velocity				
Max. Velocity @ 1x230VAC	m/s	(in/s)	2.2	(89.9)
Max. Velocity @ 3x400VAC	m/s	(in/s)	3.9	(3.9)
Position Detection				
Repeatability	mm	(in)	±0.05	(±0.002)
Linearity	%		± 0.2	
Electrical Data				
Max. Current @ 1x230VAC	A_{pk} / A_{rms}		26.8 / 18.9	
Max. Current @ 3x400VAC	A_{pk} / A_{rms}		33.9 / 23.9	
Max. Cont. Current 1 [Passive cooling /Fan / Fluid]	A_{pk}		4 / 6.2 / 11	
Max. Cont. Current 2 [Passive cooling /Fan / Fluid]	A_{rms}		2.9 / 4.4 / 7.9	
Thermal Data				
Max. Winding Temperature (Sensor)	°C		90	
Thermal Resistance [Passive cooling / Fan / Fluid]	°K/W		0.52 / 0.22 / 0.068	
Thermal Time Constant [Passive cooling / Fan / Fluid]	s		2100 / 500 / 100	
Mechanical Data				
Slider Length	mm	(in)	1190	(47)
Slider Mass	g	(lb)	5590	(12.3)

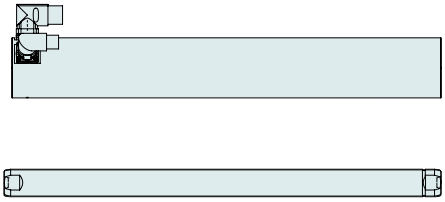

Item	Description	Item-No.
PS10-70x400U-BL-QJ	Stator 3x400VAC, LinMot Encoder	0150-1294
PS10-70x400U-BL-QJ-D01	Stator 3x400VAC, Sin/Cos Encoder 1Vpp, KTY	0150-2286
PS10-70x400U-BL-QJ-D02	Stator 3x400VAC, Sin/Cos Encoder 1Vpp, PTC	0150-2363
PS10-70x400U-BL-QJ-D03	Stator 3x400VAC, Sin/Cos 1Vpp, KTY on power connector	0150-2712
PL10-28x1190/1140	Slider for P10-70 'standard'	0150-2204

P10-70x400U/850-BL-QJ

Max. Stroke: 850 mm
Peak Force: 2720 N

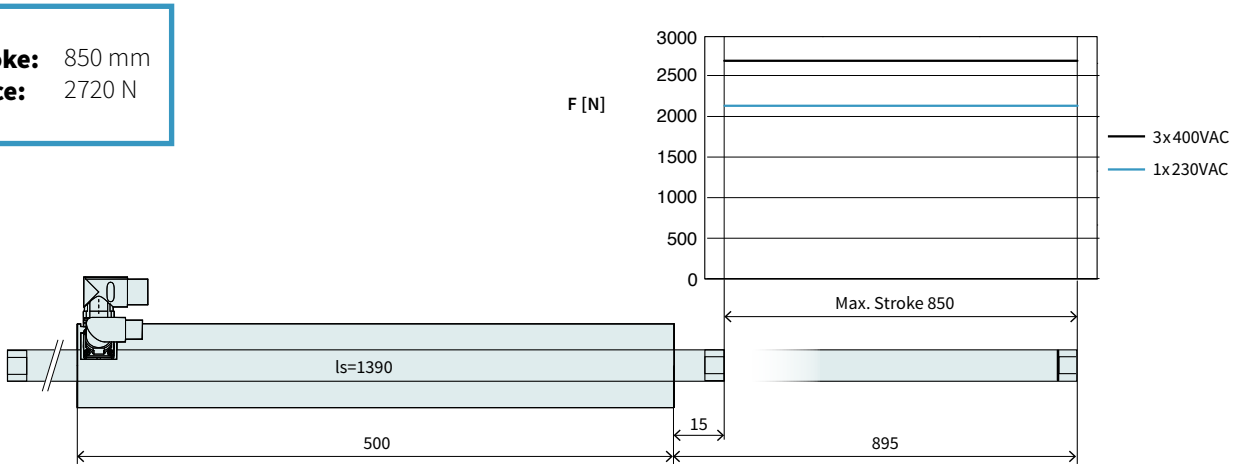

Dimensions in mm

Technical Data P10-70x400U/850				
Stroke				
Max. Stroke	mm	(in)	850	(33.49)
Force				
Max. Force @ 1x230VAC	N	(lbf)	2150	(483)
Max. Force @ 3x400VAC	N	(lbf)	2720	(611)
Max. Cont. Force [Passive cooling/ Fan / Fluid]	N	(lbf)	320 / 500 / 890	(73 / 110 / 200)
Max. Border Force relative	%		100	
Force Constant 1	N/A_{pk}	(lbf/A_{pk})	80	(18)
Force Constant 2	N/A_{rms}	(lbf/A_{rms})	113	(25.4)
Velocity				
Max. Velocity @ 1x230VAC	m/s	(in/s)	2.2	(89.9)
Max. Velocity @ 3x400VAC	m/s	(in/s)	3.9	(3.9)
Position Detection				
Repeatability	mm	(in)	±0.05	(±0.002)
Linearity	%		± 0.15	
Electrical Data				
Max. Current @ 1x230VAC	A_{pk} / A_{rms}		26.8 / 18.9	
Max. Current @ 3x400VAC	A_{pk} / A_{rms}		33.9 / 23.9	
Max. Cont. Current 1 [Passive cooling /Fan / Fluid]	A_{pk}		4 / 6.2 / 11	
Max. Cont. Current 2 [Passive cooling /Fan / Fluid]	A_{rms}		2.9 / 4.4 / 7.9	
Thermal Data				
Max. Winding Temperature (Sensor)	°C		90	
Thermal Resistance [Passive cooling / Fan / Fluid]	°K/W		0.52 / 0.22 / 0.068	
Thermal Time Constant [Passive cooling / Fan / Fluid]	s		2100 / 500 / 100	
Mechanical Data				
Slider Length	mm	(in)	1390	(55)
Slider Mass	g	(lb)	6530	(14.37)

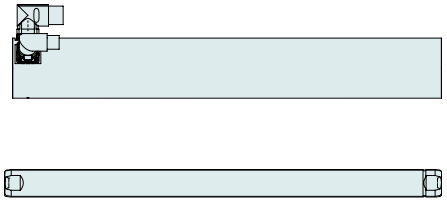

Item	Description	Item-No.
PS10-70x400U-BL-QJ	Stator 3x400VAC, LinMot Encoder	0150-1294
PS10-70x400U-BL-QJ-D01	Stator 3x400VAC, Sin/Cos Encoder 1Vpp, KTY	0150-2286
PS10-70x400U-BL-QJ-D02	Stator 3x400VAC, Sin/Cos Encoder 1Vpp, PTC	0150-2363
PS10-70x400U-BL-QJ-D03	Stator 3x400VAC, Sin/Cos 1Vpp, KTY on power connector	0150-2712
PL10-28x1390/1340	Slider for P10-70 'standard'	0150-2205

P10-70x400U/1050-BL-QJ

Max. Stroke: 1050 mm
Peak Force: 2720 N

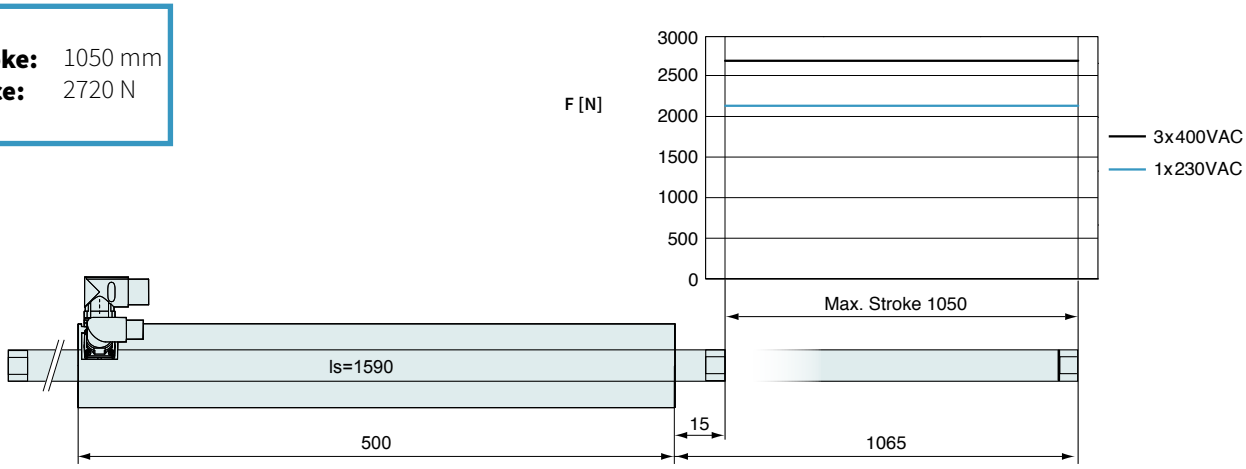

Dimensions in mm

Technical Data P10-70x400U/1050				
Stroke				
Max. Stroke	mm	(in)	1050	(41.29)
Force				
Max. Force @ 1x230VAC	N	(lbf)	2150	(483)
Max. Force @ 3x400VAC	N	(lbf)	2720	(611)
Max. Cont. Force [Passive cooling/ Fan / Fluid]	N	(lbf)	320 / 500 / 890	(73 / 110 / 200)
Max. Border Force relative	%		100	
Force Constant 1	N/A_{pk}	(lbf/A_{pk})	80	(18)
Force Constant 2	N/A_{rms}	(lbf/A_{rms})	113	(25.4)
Velocity				
Max. Velocity @ 1x230VAC	m/s	(in/s)	2.2	(89.9)
Max. Velocity @ 3x400VAC	m/s	(in/s)	3.9	(3.9)
Position Detection				
Repeatability	mm	(in)	±0.05	(±0.002)
Linearity	%		± 0.15	
Electrical Data				
Max. Current @ 1x230VAC	A_{pk} / A_{rms}		26.8 / 18.9	
Max. Current @ 3x400VAC	A_{pk} / A_{rms}		33.9 / 23.9	
Max. Cont. Current 1 [Passive cooling /Fan / Fluid]	A_{pk}		4 / 6.2 / 11	
Max. Cont. Current 2 [Passive cooling /Fan / Fluid]	A_{rms}		2.9 / 4.4 / 7.9	
Thermal Data				
Max. Winding Temperature (Sensor)	°C		90	
Thermal Resistance [Passive cooling / Fan / Fluid]	°K/W		0.52 / 0.22 / 0.068	
Thermal Time Constant [Passive cooling / Fan / Fluid]	s		2100 / 500 / 100	
Mechanical Data				
Slider Length	mm	(in)	1590	(63)
Slider Mass	g	(lb)	7470	(16.43)

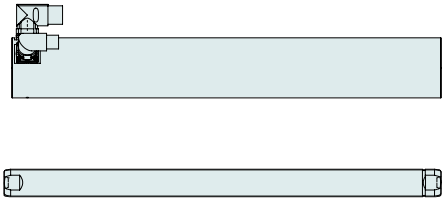

Item	Description	Item-No.
PS10-70x400U-BL-QJ	Stator 3x400VAC, LinMot Encoder	0150-1294
PS10-70x400U-BL-QJ-D01	Stator 3x400VAC, Sin/Cos Encoder 1Vpp, KTY	0150-2286
PS10-70x400U-BL-QJ-D02	Stator 3x400VAC, Sin/Cos Encoder 1Vpp, PTC	0150-2363
PS10-70x400U-BL-QJ-D03	Stator 3x400VAC, Sin/Cos 1Vpp, KTY on power connector	0150-2712
PL10-28x1590/1540	Slider for P10-70 'standard'	0150-2206

P10-70x400U/1250-BL-QJ

Max. Stroke: 1250 mm
Peak Force: 2720 N

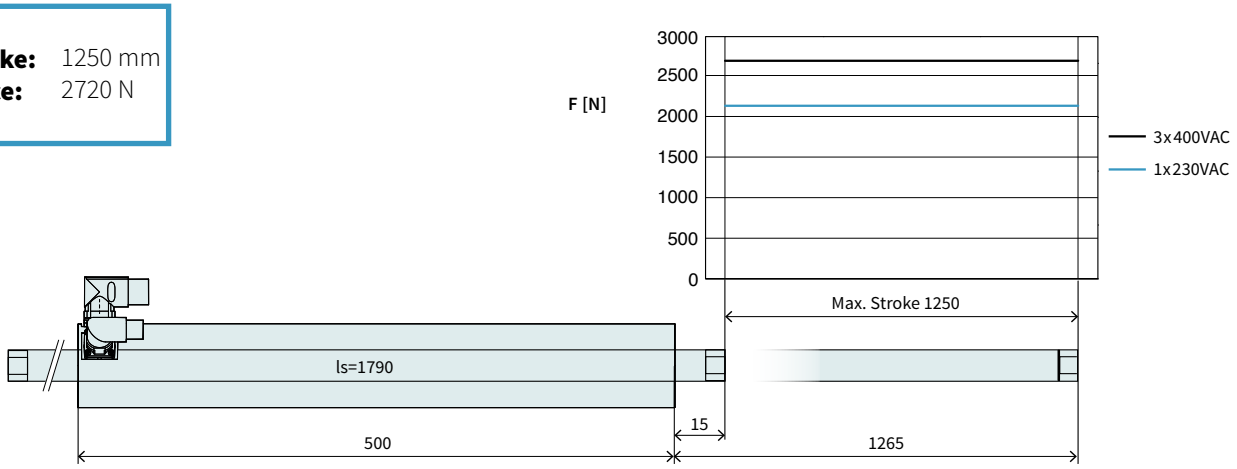

Dimensions in mm

Technical Data P10-70x400U/1250				
Stroke				
Max. Stroke	mm	(in)	1250	(49.2)
Force				
Max. Force @ 1x230VAC	N	(lbf)	2150	(483)
Max. Force @ 3x400VAC	N	(lbf)	2720	(611)
Max. Cont. Force [Passive cooling/ Fan / Fluid]	N	(lbf)	320 / 500 / 890	(73 / 110 / 200)
Max. Border Force relative	%		100	
Force Constant 1	N/A_{pk}	(lbf/A_{pk})	80	(18)
Force Constant 2	N/A_{rms}	(lbf/A_{rms})	113	(25.4)
Velocity				
Max. Velocity @ 1x230VAC	m/s	(in/s)	2.2	(89.9)
Max. Velocity @ 3x400VAC	m/s	(in/s)	3.9	(3.9)
Position Detection				
Repeatability	mm	(in)	±0.05	(±0.002)
Linearity	%		± 0.15	
Electrical Data				
Max. Current @ 1x230VAC	A_{pk} / A_{rms}		26.8 / 18.9	
Max. Current @ 3x400VAC	A_{pk} / A_{rms}		33.9 / 23.9	
Max. Cont. Current 1 [Passive cooling /Fan / Fluid]	A_{pk}		4 / 6.2 / 11	
Max. Cont. Current 2 [Passive cooling /Fan / Fluid]	A_{rms}		2.9 / 4.4 / 7.9	
Thermal Data				
Max. Winding Temperature (Sensor)	°C		90	
Thermal Resistance [Passive cooling / Fan / Fluid]	°K/W		0.52 / 0.22 / 0.068	
Thermal Time Constant [Passive cooling / Fan / Fluid]	s		2100 / 500 / 100	
Mechanical Data				
Slider Length	mm	(in)	1790	(70)
Slider Mass	g	(lb)	8413	(18.51)

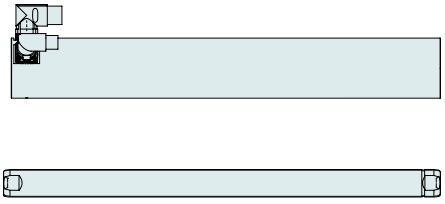

Item	Description	Item-No.
PS10-70x400U-BL-QJ	Stator 3x400VAC, LinMot Encoder	0150-1294
PS10-70x400U-BL-QJ-D01	Stator 3x400VAC, Sin/Cos Encoder 1Vpp, KTY	0150-2286
PS10-70x400U-BL-QJ-D02	Stator 3x400VAC, Sin/Cos Encoder 1Vpp, PTC	0150-2363
PS10-70x400U-BL-QJ-D03	Stator 3x400VAC, Sin/Cos 1Vpp, KTY on power connector	0150-2712
PL10-28x1790/1740	Slider for P10-70 'standard'	0150-2207

P10-70x400U/1450-BL-QJ

Max. Stroke: 1450 mm
Peak Force: 2720 N

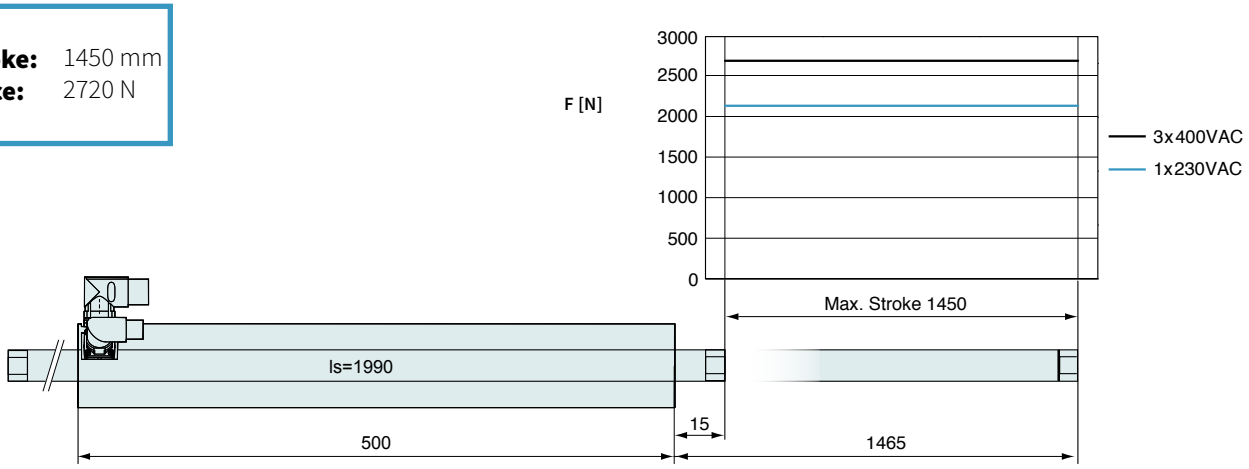

Dimensions in mm

Technical Data P10-70x400U/1450				
Stroke				
Max. Stroke	mm	(in)	1450	(57.1)
Force				
Max. Force @ 1x230VAC	N	(lbf)	2150	(483)
Max. Force @ 3x400VAC	N	(lbf)	2720	(611)
Max. Cont. Force [Passive cooling/ Fan / Fluid]	N	(lbf)	320 / 500 / 890	(73 / 110 / 200)
Max. Border Force relative	%		100	
Force Constant 1	N/A_{pk}	(lbf/A_{pk})	80	(18)
Force Constant 2	N/A_{rms}	(lbf/A_{rms})	113	(25.4)
Velocity				
Max. Velocity @ 1x230VAC	m/s	(in/s)	2.2	(89.9)
Max. Velocity @ 3x400VAC	m/s	(in/s)	3.9	(3.9)
Position Detection				
Repeatability	mm	(in)	±0.05	(±0.002)
Linearity	%		± 0.15	
Electrical Data				
Max. Current @ 1x230VAC	A_{pk} / A_{rms}		26.8 / 18.9	
Max. Current @ 3x400VAC	A_{pk} / A_{rms}		33.9 / 23.9	
Max. Cont. Current 1 [Passive cooling /Fan / Fluid]	A_{pk}		4 / 6.2 / 11	
Max. Cont. Current 2 [Passive cooling /Fan / Fluid]	A_{rms}		2.9 / 4.4 / 7.9	
Thermal Data				
Max. Winding Temperature (Sensor)	°C		90	
Thermal Resistance [Passive cooling / Fan / Fluid]	°K/W		0.52 / 0.22 / 0.068	
Thermal Time Constant [Passive cooling / Fan / Fluid]	s		2100 / 500 / 100	
Mechanical Data				
Slider Length	mm	(in)	1990	(78)
Slider Mass	g	(lb)	9350	(20.57)

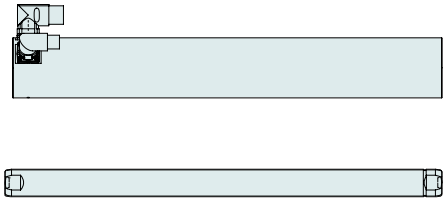

Item	Description	Item-No.
PS10-70x400U-BL-QJ	Stator 3x400VAC, LinMot Encoder	0150-1294
PS10-70x400U-BL-QJ-D01	Stator 3x400VAC, Sin/Cos Encoder 1Vpp, KTY	0150-2286
PS10-70x400U-BL-QJ-D02	Stator 3x400VAC, Sin/Cos Encoder 1Vpp, PTC	0150-2363
PS10-70x400U-BL-QJ-D03	Stator 3x400VAC, Sin/Cos 1Vpp, KTY on power connector	0150-2712
PL10-28x1990/1940	Slider for P10-70 'standard'	0150-2208

Linear Guides H10



HM10-70x400/50	Linear Module 70x400 with 50 mm Stroke		
H-Guide	H10-70x400/50	H-Guide for P10-70x400, Stroke max. 50 mm	0150-5419
Stator	PS10-70x400U-BL-QJ	Stator 3x400VAC, LinMot Encoder	0150-1294
	PS10-70x400U-BL-QJ-D01	Stator 3x400VAC, Sin/Cos Encoder 1Vpp, KTY	0150-2286
	PS10-70x400U-BL-QJ-D02	Stator 3x400VAC, Sin/Cos Encoder 1Vpp, PTC	0150-2363
	PS10-70x400U-BL-QJ-D03	Stator 3x400VAC, Sin/Cos 1Vpp, KTY on power connector	0150-2712
Slider	PL10-28x590/540	Slider for P10-70 'standard'	0150-2196

HM10-70x400/150	Linear Module 70x400 with 150 mm Stroke		
H-Guide	H10-70x400/150	H-Guide for P10-70x400, Stroke max. 150 mm	0150-5420
Stator	PS10-70x400U-BL-QJ	Stator 3x400VAC, LinMot Encoder	0150-1294
	PS10-70x400U-BL-QJ-D01	Stator 3x400VAC, Sin/Cos Encoder 1Vpp, KTY	0150-2286
	PS10-70x400U-BL-QJ-D02	Stator 3x400VAC, Sin/Cos Encoder 1Vpp, PTC	0150-2363
	PS10-70x400U-BL-QJ-D03	Stator 3x400VAC, Sin/Cos 1Vpp, KTY on power connector	0150-2712
Slider	PL10-28x690/640	Slider for P10-70 'standard'	0150-2197

HM10-70x400/250	Linear Module 70x400 with 250 mm Stroke		
H-Guide	H10-70x400/250	H-Guide for P10-70x400, Stroke max. 250 mm	0150-5421
Stator	PS10-70x400U-BL-QJ	Stator 3x400VAC, LinMot Encoder	0150-1294
	PS10-70x400U-BL-QJ-D01	Stator 3x400VAC, Sin/Cos Encoder 1Vpp, KTY	0150-2286
	PS10-70x400U-BL-QJ-D02	Stator 3x400VAC, Sin/Cos Encoder 1Vpp, PTC	0150-2363
	PS10-70x400U-BL-QJ-D03	Stator 3x400VAC, Sin/Cos 1Vpp, KTY on power connector	0150-2712
Slider	PL10-28x790/740	Slider for P10-70 'standard'	0150-2198

FIND MORE PRODUCT DETAILS IN THE CHAPTER "LINEAR GUIDES".

HM10-70x400/350	Linear Module 70x400 with 350 mm Stroke		
H-Guide	H10-70x400/350	H-Guide for P10-70x400, Stroke max. 350 mm	0150-5422
Stator	PS10-70x400U-BL-QJ	Stator 3x400VAC, LinMot Encoder	0150-1294
	PS10-70x400U-BL-QJ-D01	Stator 3x400VAC, Sin/Cos Encoder 1Vpp, KTY	0150-2286
	PS10-70x400U-BL-QJ-D02	Stator 3x400VAC, Sin/Cos Encoder 1Vpp, PTC	0150-2363
	PS10-70x400U-BL-QJ-D03	Stator 3x400VAC, Sin/Cos 1Vpp, KTY on power connector	0150-2712
Slider	PL10-28x890/840	Slider for P10-70 'standard'	0150-2199

HM10-70x400/450	Linear Module 70x400 with 450 mm Stroke		
H-Guide	H10-70x400/450	H-Guide for P10-70x400, Stroke max. 450 mm	0150-5423
Stator	PS10-70x400U-BL-QJ	Stator 3x400VAC, LinMot Encoder	0150-1294
	PS10-70x400U-BL-QJ-D01	Stator 3x400VAC, Sin/Cos Encoder 1Vpp, KTY	0150-2286
	PS10-70x400U-BL-QJ-D02	Stator 3x400VAC, Sin/Cos Encoder 1Vpp, PTC	0150-2363
	PS10-70x400U-BL-QJ-D03	Stator 3x400VAC, Sin/Cos 1Vpp, KTY on power connector	0150-2712
Slider	PL10-28x990/940	Slider for P10-70 'standard'	0150-2203

Accessories			
Fan	HV01-37/48	Fan cooling for H01-37/48 &PF02-37/48	0150-5051

Motor Cable

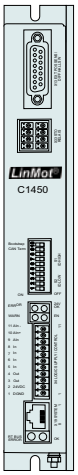

C1400

B Connector MC10-B/m

Q Connector MC10-Q/f

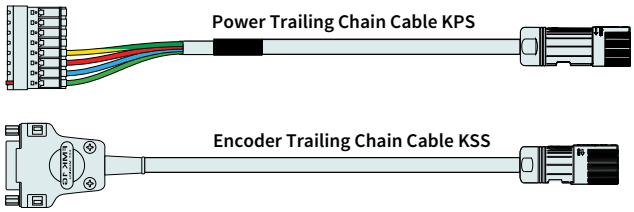



P10-70x400U

D15 Connector MC01-D15/f

J Connector MC10-J/f



E1400

L Connector MC10-L/m

Q Connector MC10-Q/f

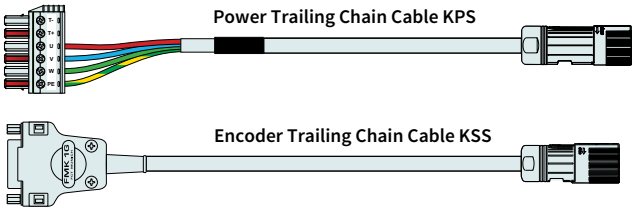



P10-70x400U

D15 Connector MC01-D15/f

J Connector MC10-J/f

ORDERING INFORMATION

TRAILING CHAIN CABLE FOR LINMOT DRIVES		
Item	**Description**	**Item-No.**
KPS15-04-L/Q-3	Power Trailing Chain Cable E1400/P10-70, 3 m	0150-2266
KPS15-04-L/Q-5	Power Trailing Chain Cable E1400/P10-70, 5 m	0150-2261
KPS15-04-L/Q-8	Power Trailing Chain Cable E1400/P10-70, 8 m	0150-2267
KPS15-04-L/Q-12	Power Trailing Chain Cable E1400/P10-70, 12 m	0150-2268
KPS15-04-L/Q-	Power Trailing Chain Cable L/Q-, Custom length	0150-3388
KPS15-04-B/Q-3	Power Trailing Chain Cable C1400/P10-70, 3 m	0150-3660
KPS15-04-B/Q-5	Power Trailing Chain Cable C1400/P10-70, 5 m	0150-3661
KPS15-04-B/Q-8	Power Trailing Chain Cable C1400/P10-70, 8 m	0150-3662
KPS15-04-B/Q-12	Power Trailing Chain Cable C1400/P10-70, 12 m	0150-3663
KPS15-04-B/Q-	Power Trailing Chain Cable B/Q-, Custom length	0150-3608

TRAILING CHAIN CABLE FOR LINMOT DRIVES		
Item	**Description**	**Item-No.**
KSS 05-02/08-D15/J-3	Encoder Trailing Chain Cable D15/J, 3 m	0150-2263
KSS 05-02/08-D15/J-5	Encoder Trailing Chain Cable D15/J, 5 m	0150-2262
KSS 05-02/08-D15/J-8	Encoder Trailing Chain Cable D15/J, 8 m	0150-2264
KSS 05-02/08-D15/J-12	Encoder Trailing Chain Cable D15/J, 12 m	0150-2265
KSS 05-02/08-D15(f)-45°/J-	Encoder Trailing Chain Cable D15/J-, Custom length	0150-3389

TRAILING CHAIN CABLE FOR STATOR SERIES D03		
Item	**Description**	**Item-No.**
KPS15-04/04..../Q-10	Power Trailing Chain Cable .../Q, 10 m for D03	0150-3654
KPS15-04/04-./Q-	Power Trailing Chain Cable .../Q, for D03, Custom length	0150-3579
KSS05-02/06-./J-10	Encoder Trailing Chain Cable ./J, 10 m for D03	0150-3655
KSS05-02/06-./J-	Encoder Trailing Chain Cable ./J, for D03, Custom length	0150-3611
KPS15-04/04	Power Trailing Chain Cable P10-...-Dx3 (per m)	0150-2269
KSS05-02/06	Trailing Chain Cable Encoder P10-...-Dx3 (per m)	0150-2490

CONNECTOR		
Item	**Description**	**Item-No.**
MC10-L/m	Connector Power E1400/X2	0150-3382
MC01-D15/f	Motor Connector D15 (f)	0150-3136
MC10-Q/f	Connector Power PS10-70	0150-2268
MC10-J/f	Connector Encoder PS10-70	0150-2269

MOTOR FLANGES



Item	Description	Item-No.
PF10-70x430	Flange for PS10-70x400	0150-2276



Item	Description	Item-No.
PF10-70x430-FC	Flange for PS10-70x400 fluid cooling	0150-2295

FIND MORE PRODUCT DETAILS IN THE CHAPTER "ACCESSORIES".

FANS



Item	Description	Item-No.
HV01-37/48	Fan cooling for H01-37/48 &PF02-37/48	0150-5051

FIND MORE PRODUCT DETAILS IN THE CHAPTER "ACCESSORIES".

SLIDER MOUNTING



Item	Description	Item-No.
PLF01-28	Fixed Bearing Set for 27/28 mm sliders	0150-3087
PLF01-28-SS	Fixed Bearing Set for 27/28 mm sliders, stainless steel	0150-3297
PLL01-28	Floating Bearing for 28 mm sliders	0150-3094
PLM01-28-MK	Mounting Kit for 28 mm sliders	0150-3095

FIND MORE PRODUCT DETAILS IN THE CHAPTER "ACCESSORIES".

BEARING KIT



Item	Description	Item-No.
PB10-70x400-L	Bearing Kit for PS10-70x400	0150-3435

FIND MORE PRODUCT DETAILS IN THE CHAPTER "ACCESSORIES".

LUBRICANT RESERVOIR



Item	Description	Item-No.
PA10-70/28	Lubricant reservoir for PS10-70 with lubricating nipple	0150-3543

FIND MORE PRODUCT DETAILS IN THE CHAPTER "ACCESSORIES".

EXTERNAL POSITION SENSORS



Item	Description	Item-No.
MS01-1/D	Linear Encoder 1µm, A/B (for incremental strip)	0150-1840
MB01-1000	Magnetic incremental strip for MS01-1/D, per cm	0150-1963
KS025-D15/D-Encoder	Encoder Cable (Length in m)	0150-3168

FIND MORE PRODUCT DETAILS IN THE CHAPTER "ACCESSORIES".



Item	Description	Item-No.
MS01-1/D-SSI	Linear Encoder 1µm, A/B (for absolute strip)	0150-2095
MB01-1000-ABS	Magnetic absolute strip for MS01-1/D-SSI (per cm)	0150-2096
EC01-ABS/ENC-12-S	MS01-1/D-SSI Encoder connector straight	0150-3616
KSS01-12-D15/ABS-ENC	Special cable for MS01-1/D-SSI on C1100/C1200/C1400/E1200/E1400 Drives	0150-3652

FIND MORE PRODUCT DETAILS IN THE CHAPTER "ACCESSORIES".

LINEAR MOTORS STAINLESS STEEL

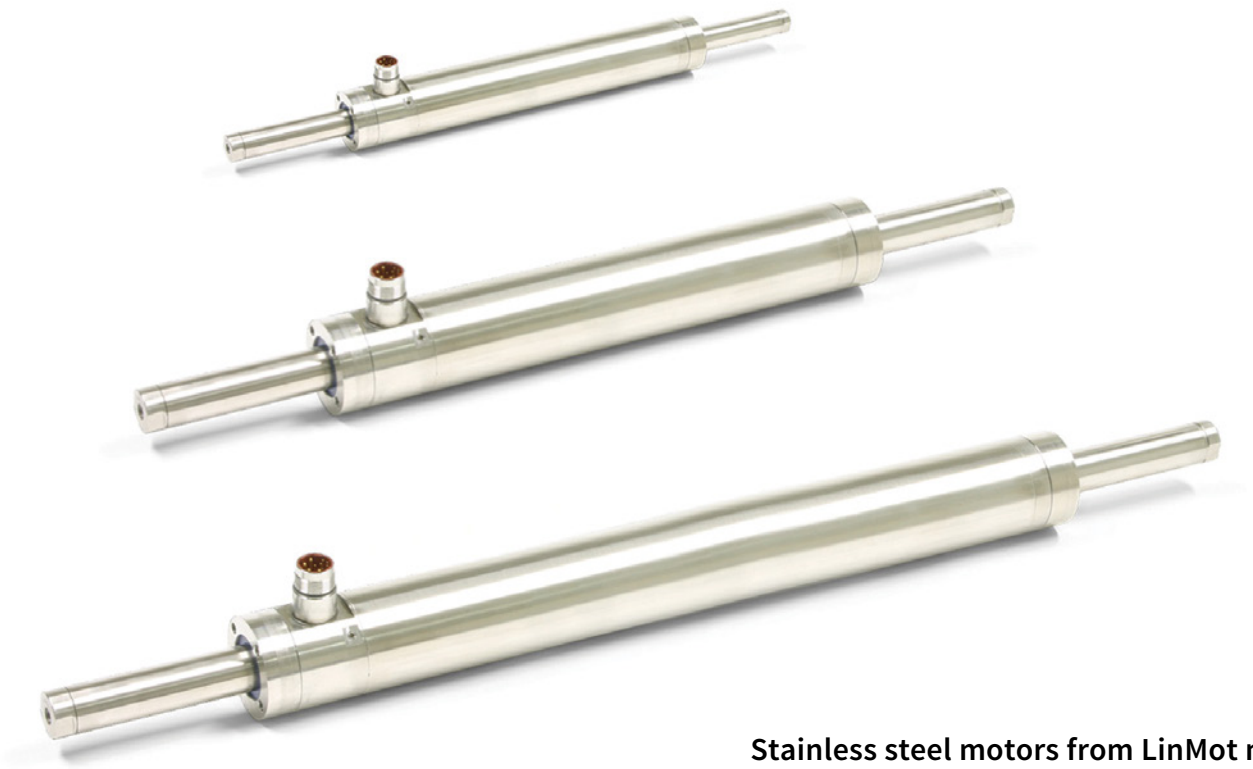

Stainless steel motors from LinMot meet the highest level of hygiene.

Product Description

Developed for a challenging environment, these compact linear motors are designed entirely of EN 1.4404/AISI 316L stainless steel. The motor is designed with hygiene as its primary goal. In order to avoid buildup of contaminants, the motor is designed without unnecessary edges, corners, holes, and threads. In addition, all joints are welded, so no seals are required.

The stainless steel family of motors consists of three sizes and has a range of strokes up to 980 mm. These drives can be used in machines and systems for processing food products or in pharmaceutical industry operations. They are capable of handling extremely rough or corrosive environments without a problem and can be cleaned with any typical industrial cleaning products.







Special Wash-Down Bearings

For optimal cleaning of the linear motors, LinMot offers stainless steel motors with specially developed wash-down bearings. They are conceived so that any contaminants can be cleaned off under high pressure without leaving any residue. The material used, just like the bearing material indicated above, has been specially certified for food product processing.

External Guide Bearings

The linear motors are equipped with external sliding bearings that guide the slider precisely over the entire stroke length. This means that the motion inside the stator occurs with no contact whatsoever. The bearing material is specially designed for use with food products and medical applications and is certified to FDA standards.

IP69K PROTECTION RATING

The windings in the LinMot motor are completely encapsulated in epoxy resign, which protects both the copper filling and the stator package against condensation and corrosion.

Thanks to this complete encapsulation, the motors are also protected against penetration by dust and water (allowing high-pressure and steam-jet cleaning). This leak tightness means that they meet protection class IP69K according to DIN EN 60529.

INTEGRATED WATER COOLING

The Stainless steel linear motors can optionally be supplied with integrated water cooling. The stator is enclosed by the cooling system along its entire length. The heat losses generated in the motor are dissipated through the liquid cooling system. This increases the rated power of the motor several times over in comparison with the self-cooled version. The lower surface temperature of the motor also greatly reduces microbe growth.

HIGH AND CONTROLLED DYNAMICS

Max. acceleration values over 400 m/s^2 and travel speeds over 3 m/s allow cyclical motion sequences of several Hertz.

For handling applications with sensitive products, such as transporting wafers in semiconductor production, very gentle, smooth motions with suitable accelerations can be obtained.

FREELY POSITIONABLE

LinMot linear motors can be freely positioned. With absolute or relative movement commands, they can move to any desired position in the stroke range. Since the LinMot linear drive is a closed-loop system, not only the end positions are monitored, but also deviations in position during travel. This allows, among other things, precise specification of travel speeds, acceleration and braking ramps, and travel through curved paths.

PROCESS STABILITY

For temperature monitoring all linear motors are equipped with sensors that transfer the data to the drive. The data can be analyzed in the superordinate control so that the motor, depending on the processing (for example, foods such as fish) can be kept in a constant temperature range.

Since not only the temperature, but also speed and acceleration are controlled and monitored, motions that are programmed once are carried out the same way over the entire life of the machine.

SYNCHRONIZATION

For synchronous machines, the linear motor can be synchronized to the main shaft. By replacing mechanical cam discs with LinMot linear motors, for example, great variations can be achieved, with format changeovers at the push of a button.

OVERLOAD PROTECTION

There are no mechanical components for force transfer that could be damaged in a crash or stall condition in a linear motor. Complex, expensive designs to protect gearboxes, gears, and shafts are thus eliminated. If the linear motor stalls, it acts like a pneumatic cylinder and tries to reach the target position with maximum force. The following error monitor in the drive can, however, immediately recognize a stall condition. Temperature sensors integrated in the stator prevent the drive from overloading in any case.

LONG LIFESPAN

Since the linear motion is generated purely magnetically, and no mechanical force transmission takes place, even extremely dynamic applications can be implemented with a long lifespan.

Type Code

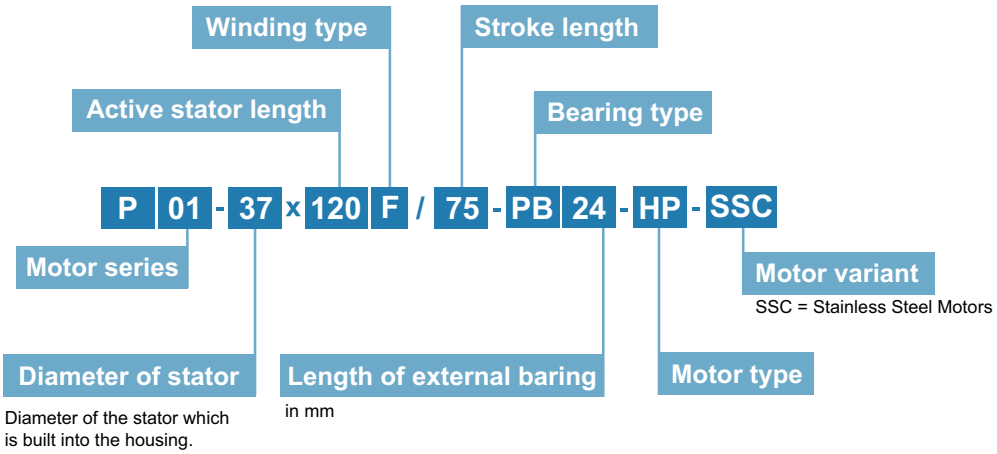

For explanations of the terms, please refer to the section "Glossary"

LINEAR MOTORS P01-37x120F-HP-SSC



- Stainless steel housing EN 1.4404 / AISI / SAE 316L
- Hygienic design
- Welded connections
- Completely encapsulated
- IP Code IP69K
- Optional integrated water cooling
- For use in the food or in the pharmaceutical sector

5

LINEAR MOTORS P01-37x120F-HP-SSC

Technical Data ____ **625**

Motor Specifications

P01-37x120F/75-HP-PB24-SSC **628**

P01-37x120F/180-HP-PB24-SSC **629**

P01-37x120F/280-HP-PB24-SSC **630**

P01-37x120F/380-HP-PB24-SSC **631**

P01-37x120F/480-HP-PB24-SSC **632**

P01-37x120F/580-HP-PB24-SSC **633**

P01-37x120F/680-HP-PB24-SSC **634**

Linear Guides ____ **635**

Accessories ____ **636**



MOTOR FAMILY P01-37x120F-HP-SSC

Technical Data				
Stroke				
Max. Stroke	mm	(in)	680	(26.8)
Force				
Max. Force @ 48VDC	N	(lbf)	210	(47.1)
Max. Force @ 72VDC	N	(lbf)	210	(47.1)
Max. Cont. Force [Passive cooling/ Fan / Fluid]	N	(lbf)	23 / - / 63	(5.3 / - / 14)
Max. Border Force relative	%		≤ 100	
Force Constant	N/A_{pk}	(lbf/A_{pk})	14	(3.14)
Velocity				
Max. Velocity @ 48VDC	m/s	(in/s)	3.2	(119.9)
Max. Velocity @ 72VDC	m/s	(in/s)	4.6	(189.9)
Position Detection				
Position Resolution	mm	(in)	0.005	(0.0002)
Repeatability	mm	(in)	±0.05	(±0.002)
Position Resolution with ES	mm	(in)	0.001	(0.00004)
Repeatability with ES	mm	(in)	±0.01	(±0.0004)
Linearity with ES	mm	(in)	±0.01	(±0.0004)
Electrical Data				
Max. Current @ 48VDC	A_{pk}		14.9	
Max. Current @ 72VDC	A_{pk}		14.9	
Max. Cont. Current [Passive cooling /Fan / Fluid]	A_{pk}		1.7 / - / 4.5	
Terminal Resistance 25 °C / 120 °C	Ohm		2.4 / 3.5	
Terminal Inductivity	mH		1.6	
Magnetic Period	mm	(in)	40	(1.57)
Thermal Data				
Max. Winding Temperature (Sensor)	°C		120	
Thermal Resistance [Passive cooling / Fan / Fluid]	°K/W		8.3 / - / 1.1	
Thermal Time Constant [Passive cooling / Fan / Fluid]	s		3300 / - / 450	
Mechanical Data				
Stator Diameter	mm	(in)	48	(1.9)
Stator Length [Connector type / Cable type]	mm	(in)	296	(12)
Stator Mass	g	(lb)	2250	(4.95)
Slider Diameter	mm	(in)	19	(0.75)
Slider Length	mm	(in)	240 - 1000	(9.4 - 39)
Slider Mass	g	(lb)	415 - 1800	(0.91 - 3.96)
IP Code			IP 69k	

STATOR

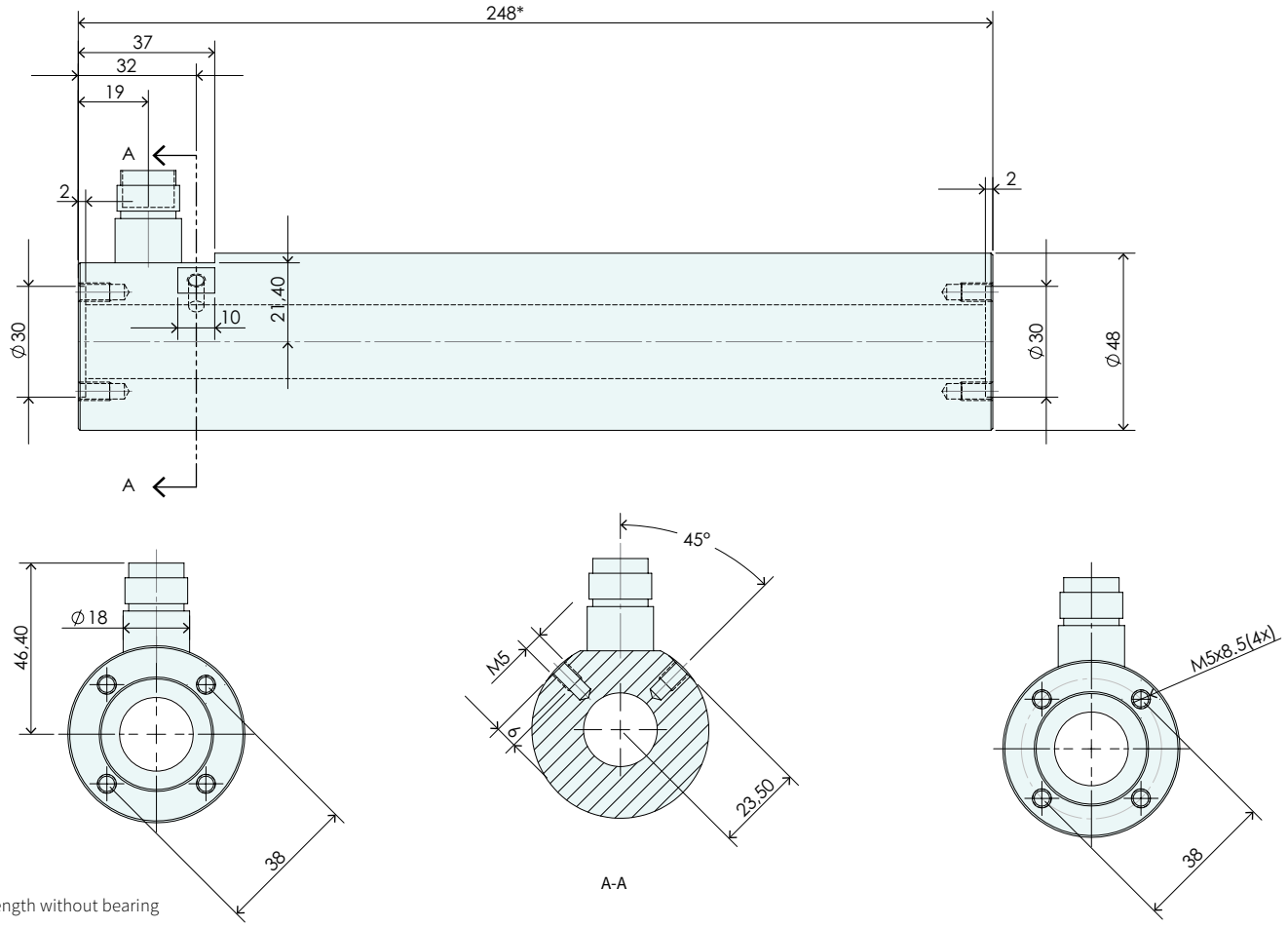

* Length without bearing

Item	Description	Item-No.
PS01-37x120F-HP-SSC-R	Stator Stainless Steel IP69K	0150-1282
PS01-37x120F-HP-SSC-R-FC	Stator stainless steel IP69K, FC	0150-1283

CONNECTOR

Motor Connector Wiring	PS01-37x120F-HP-SSC-R PS01-37x120F-HP-SSC-R-FC R-Connector	Wire Color Motor Cable
Ph 1+	1	red
Ph 1-	2	pink
Ph 2+	3	blue
Ph 2-	4	grey
+5VDC	A	white
GND	B	inner Shield
Sinus	C	yellow
Cosinus	D	green
Temp.	E	black
Shield	Case	outer Shield

R-Connector

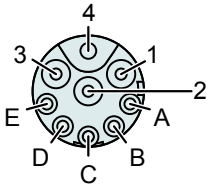

View: Motor connector, plug side

SLIDER

Slider High Clearance

Number of grooves determines the slider type
(see chapter 2 / slider) and marks the front end.

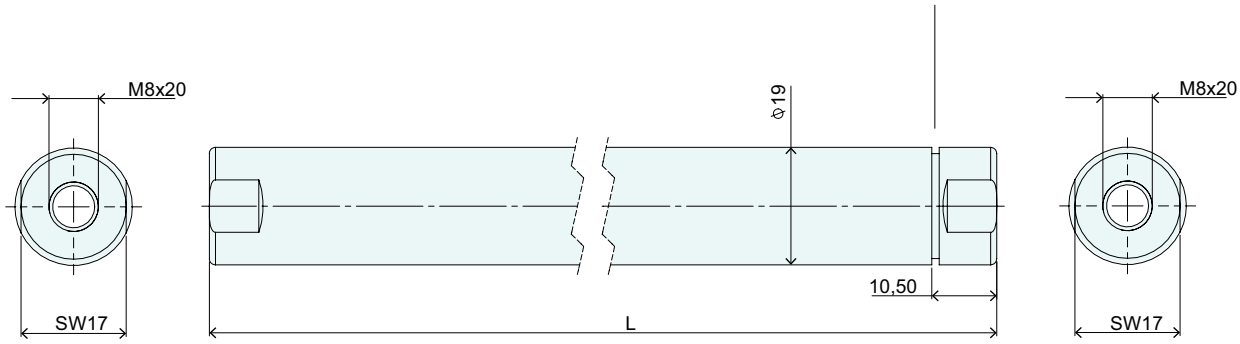

Slider High Clearance			
Item	Description	Max. Stroke [mm]	Item-No.
PL01-19x395/320	Slider 'High Clearance'	75	0150-1452
PL01-19x500/420	Slider 'High Clearance'	180	0150-1455
PL01-19x600/520	Slider 'High Clearance'	280	0150-1456
PL01-19x700/620	Slider 'High Clearance'	380	0150-1457
PL01-19x800/720	Slider 'High Clearance'	480	0150-1458
PL01-19x900/820	Slider 'High Clearance'	580	0150-1459
PL01-19x1000/920	Slider 'High Clearance'	680	0150-1460

P01-37x120F/75-PB24-HP-SSC

Max. Stroke: 75 mm
Peak Force: 210 N

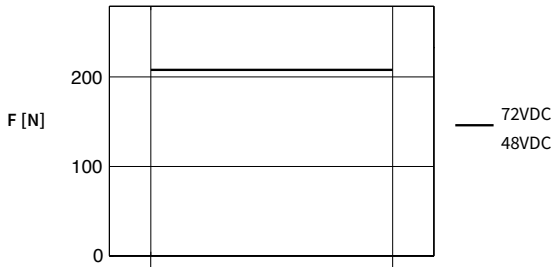

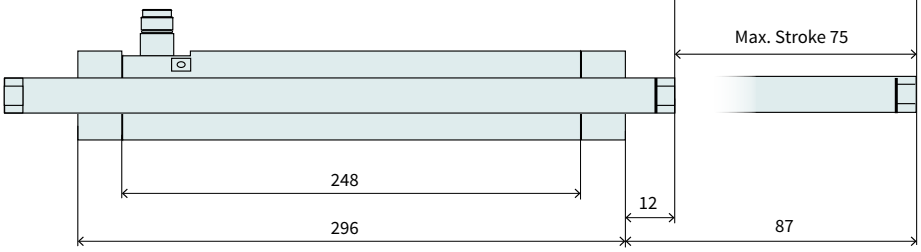

Dimensions in mm

Technical Data P01-37x120F/75-HP-PB24-SSC				
Stroke				
Max. Stroke	mm	(in)	75	(2.95)
Force				
Max. Force @ 48VDC	N	(lbf)	210	(47.1)
Max. Force @ 72VDC	N	(lbf)	210	(47.1)
Max. Cont. Force [Passive cooling/ Fan / Fluid]	N	(lbf)	23 / - / 63	(5.3 / - / 14)
Max. Border Force relative	%		100	
Force Constant	N/A_{pk}	(lbf/A_{pk})	14	(3.14)
Velocity				
Max. Velocity @ 48VDC	m/s	(in/s)	3.2	(119.9)
Max. Velocity @ 72VDC	m/s	(in/s)	4.6	(189.9)
Position Detection				
Repeatability	mm	(in)	±0.05	(±0.002)
Linearity	%		± 0.75	
Electrical Data				
Max. Current @ 48VDC	A_{pk}		14.9	
Max. Current @ 72VDC	A_{pk}		14.9	
Max. Cont. Current [Passive cooling /Fan / Fluid]	A_{pk}		1.7 / - / 4.5	
Thermal Data				
Max. Winding Temperature (Sensor)	°C		120	
Thermal Resistance [Passive cooling / Fan / Fluid]	°K/W		8.3 / - / 1.1	
Thermal Time Constant [Passive cooling / Fan / Fluid]	s		3300 / - / 450	
Mechanical Data				
Slider Length	mm	(in)	395	(16)
Slider Mass	g	(lb)	748	(1.65)





Item	Description	Item-No.
PS01-37x120F-HP-SSC-R	Stator Stainless Steel IP69K	0150-1282
PS01-37x120F-HP-SSC-R-FC	Stator stainless steel IP69K, FC	0150-1283
PL01-19x395/320	Slider 'High Clearance'	0150-1452

P01-37x120F/180-PB24-HP-SSC

Max. Stroke: 180 mm
Peak Force: 210 N

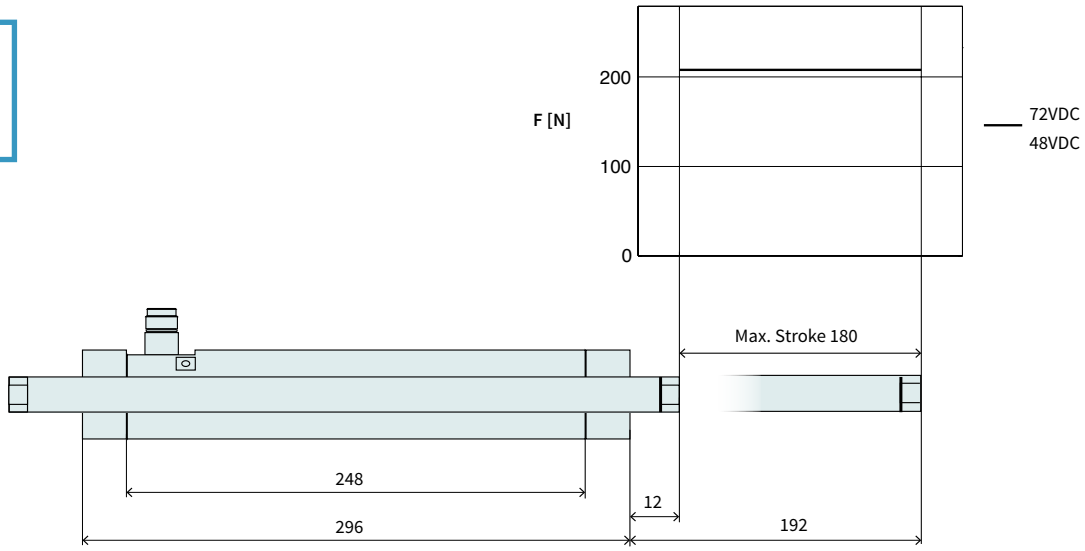

Dimensions in mm

Technical Data P01-37x120F/180-HP-PB24-SSC				
Stroke				
Max. Stroke	mm	(in)	180	(7.08)
Force				
Max. Force @ 48VDC	N	(lbf)	210	(47.1)
Max. Force @ 72VDC	N	(lbf)	210	(47.1)
Max. Cont. Force [Passive cooling/ Fan / Fluid]	N	(lbf)	23 / - / 63	(5.3 / - / 14)
Max. Border Force relative	%		100	
Force Constant	N/A_{pk}	(lbf/A_{pk})	14	(3.14)
Velocity				
Max. Velocity @ 48VDC	m/s	(in/s)	3.2	(119.9)
Max. Velocity @ 72VDC	m/s	(in/s)	4.6	(189.9)
Position Detection				
Repeatability	mm	(in)	±0.05	(±0.002)
Linearity	%		± 0.4	
Electrical Data				
Max. Current @ 48VDC	A_{pk}		14.9	
Max. Current @ 72VDC	A_{pk}		14.9	
Max. Cont. Current [Passive cooling /Fan / Fluid]	A_{pk}		1.7 / - / 4.5	
Thermal Data				
Max. Winding Temperature (Sensor)	°C		120	
Thermal Resistance [Passive cooling / Fan / Fluid]	°K/W		8.3 / - / 1.1	
Thermal Time Constant [Passive cooling / Fan / Fluid]	s		3300 / - / 450	
Mechanical Data				
Slider Length	mm	(in)	500	(20)
Slider Mass	g	(lb)	960	(2.11)





Item	Description	Item-No.
PS01-37x120F-HP-SSC-R	Stator Stainless Steel IP69K	0150-1282
PS01-37x120F-HP-SSC-R-FC	Stator stainless steel IP69K, FC	0150-1283
PL01-19x500/420	Slider 'High Clearance'	0150-1455

P01-37x120F/280-PB24-HP-SSC

Max. Stroke: 280 mm
Peak Force: 210 N

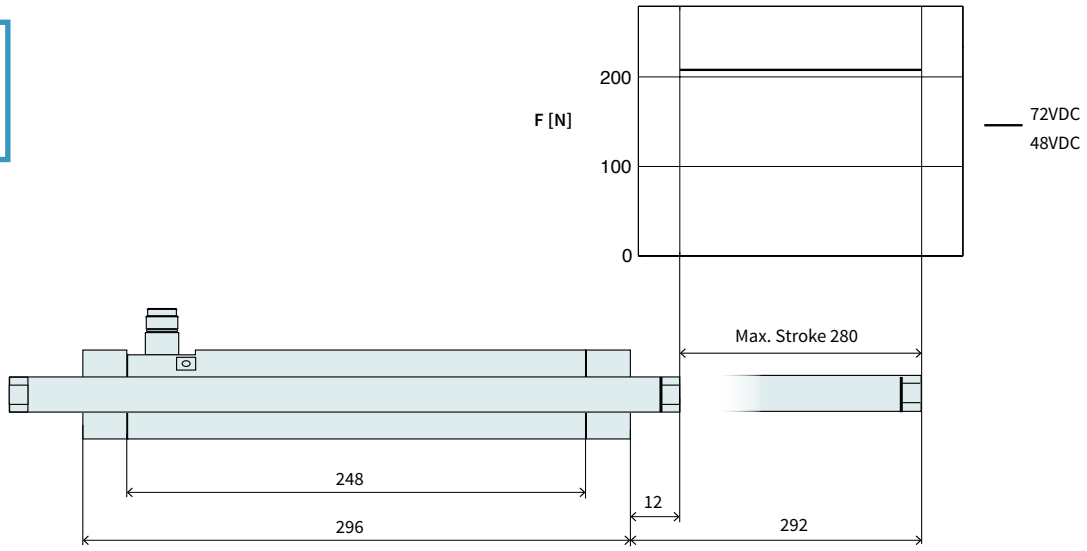

Dimensions in mm

Technical Data P01-37x120F/280-HP-PB24-SSC				
Stroke				
Max. Stroke	mm	(in)	280	(10.99)
Force				
Max. Force @ 48VDC	N	(lbf)	210	(47.1)
Max. Force @ 72VDC	N	(lbf)	210	(47.1)
Max. Cont. Force [Passive cooling/ Fan / Fluid]	N	(lbf)	23 / - / 63	(5.3 / - / 14)
Max. Border Force relative	%		100	
Force Constant	N/A_{pk}	(lbf/A_{pk})	14	(3.14)
Velocity				
Max. Velocity @ 48VDC	m/s	(in/s)	3.2	(119.9)
Max. Velocity @ 72VDC	m/s	(in/s)	4.6	(189.9)
Position Detection				
Repeatability	mm	(in)	±0.05	(±0.002)
Linearity	%		± 0.3	
Electrical Data				
Max. Current @ 48VDC	A_{pk}		14.9	
Max. Current @ 72VDC	A_{pk}		14.9	
Max. Cont. Current [Passive cooling /Fan / Fluid]	A_{pk}		1.7 / - / 4.5	
Thermal Data				
Max. Winding Temperature (Sensor)	°C		120	
Thermal Resistance [Passive cooling / Fan / Fluid]	°K/W		8.3 / - / 1.1	
Thermal Time Constant [Passive cooling / Fan / Fluid]	s		3300 / - / 450	
Mechanical Data				
Slider Length	mm	(in)	600	(24)
Slider Mass	g	(lb)	1171	(2.58)





Item	Description	Item-No.
PS01-37x120F-HP-SSC-R	Stator Stainless Steel IP69K	0150-1282
PS01-37x120F-HP-SSC-R-FC	Stator stainless steel IP69K, FC	0150-1283
PL01-19x600/520	Slider 'High Clearance'	0150-1456

P01-37x120F/380-PB24-HP-SSC

Max. Stroke: 380 mm
Peak Force: 210 N

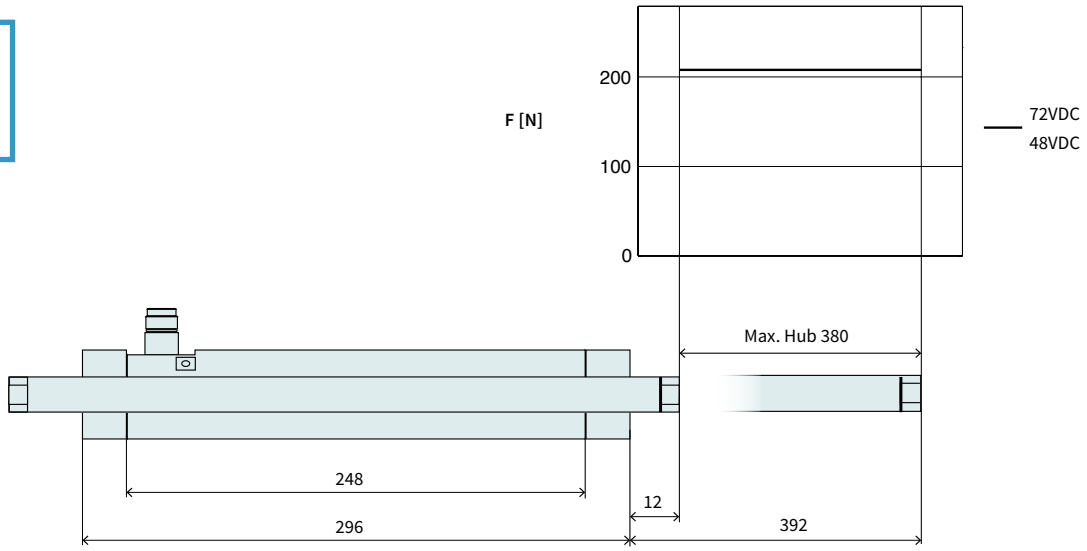

Dimensions in mm

Technical Data P01-37x120F/380-HP-PB24-SSC				
Stroke				
Max. Stroke	mm	(in)	380	(14.99)
Force				
Max. Force @ 48VDC	N	(lbf)	210	(47.1)
Max. Force @ 72VDC	N	(lbf)	210	(47.1)
Max. Cont. Force [Passive cooling/ Fan / Fluid]	N	(lbf)	23 / - / 63	(5.3 / - / 14)
Max. Border Force relative	%		100	
Force Constant	N/A_{pk}	(lbf/A_{pk})	14	(3.14)
Velocity				
Max. Velocity @ 48VDC	m/s	(in/s)	3.2	(119.9)
Max. Velocity @ 72VDC	m/s	(in/s)	4.6	(189.9)
Position Detection				
Repeatability	mm	(in)	±0.05	(±0.002)
Linearity	%		± 0.25	
Electrical Data				
Max. Current @ 48VDC	A_{pk}		14.9	
Max. Current @ 72VDC	A_{pk}		14.9	
Max. Cont. Current [Passive cooling /Fan / Fluid]	A_{pk}		1.7 / - / 4.5	
Thermal Data				
Max. Winding Temperature (Sensor)	°C		120	
Thermal Resistance [Passive cooling / Fan / Fluid]	°K/W		8.3 / - / 1.1	
Thermal Time Constant [Passive cooling / Fan / Fluid]	s		3300 / - / 450	
Mechanical Data				
Slider Length	mm	(in)	700	(28)
Slider Mass	g	(lb)	1380	(3.04)





Item	Description	Item-No.
PS01-37x120F-HP-SSC-R	Stator Stainless Steel IP69K	0150-1282
PS01-37x120F-HP-SSC-R-FC	Stator stainless steel IP69K, FC	0150-1283
PL01-19x700/620	Slider 'High Clearance'	0150-1457

P01-37x120F/480-PB24-HP-SSC

Max. Stroke: 480 mm
Peak Force: 210 N

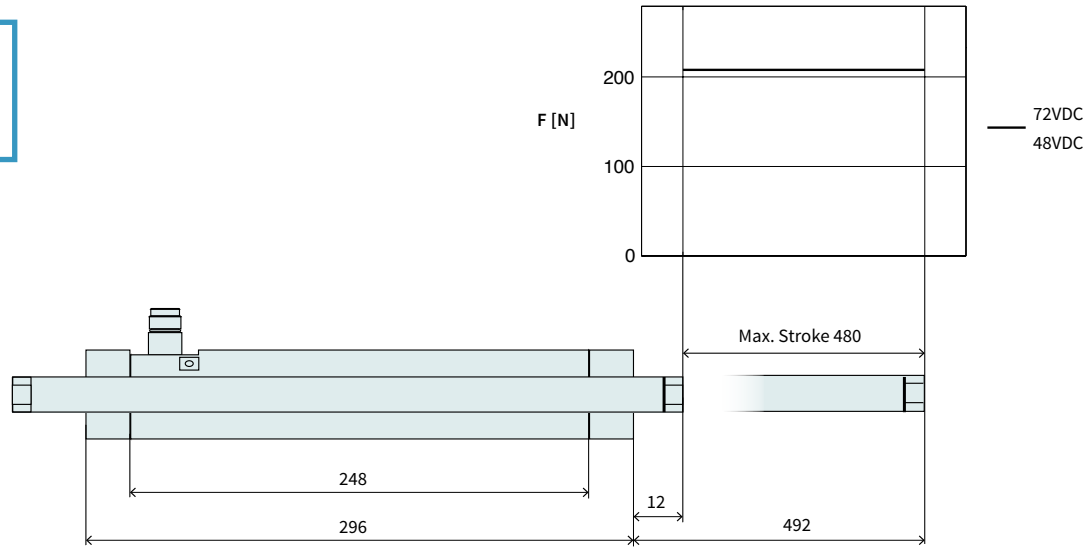

Dimensions in mm

Technical Data P01-37x120F/480-HP-PB24-SSC				
Stroke				
Max. Stroke	mm	(in)	480	(18.89)
Force				
Max. Force @ 48VDC	N	(lbf)	210	(47.1)
Max. Force @ 72VDC	N	(lbf)	210	(47.1)
Max. Cont. Force [Passive cooling/ Fan / Fluid]	N	(lbf)	23 / - / 63	(5.3 / - / 14)
Max. Border Force relative	%		100	
Force Constant	N/A_{pk}	(lbf/A_{pk})	14	(3.14)
Velocity				
Max. Velocity @ 48VDC	m/s	(in/s)	3.2	(119.9)
Max. Velocity @ 72VDC	m/s	(in/s)	4.6	(189.9)
Position Detection				
Repeatability	mm	(in)	±0.05	(±0.002)
Linearity	%		± 0.2	
Electrical Data				
Max. Current @ 48VDC	A_{pk}		14.9	
Max. Current @ 72VDC	A_{pk}		14.9	
Max. Cont. Current [Passive cooling /Fan / Fluid]	A_{pk}		1.7 / - / 4.5	
Thermal Data				
Max. Winding Temperature (Sensor)	°C		120	
Thermal Resistance [Passive cooling / Fan / Fluid]	°K/W		8.3 / - / 1.1	
Thermal Time Constant [Passive cooling / Fan / Fluid]	s		3300 / - / 450	
Mechanical Data				
Slider Length	mm	(in)	800	(31)
Slider Mass	g	(lb)	1590	(3.5)





Item	Description	Item-No.
PS01-37x120F-HP-SSC-R	Stator Stainless Steel IP69K	0150-1282
PS01-37x120F-HP-SSC-R-FC	Stator stainless steel IP69K, FC	0150-1283
PL01-19x800/720	Slider 'High Clearance'	0150-1458

P01-37x120F/580-PB24-HP-SSC

Max. Stroke: 580 mm
Peak Force: 210 N

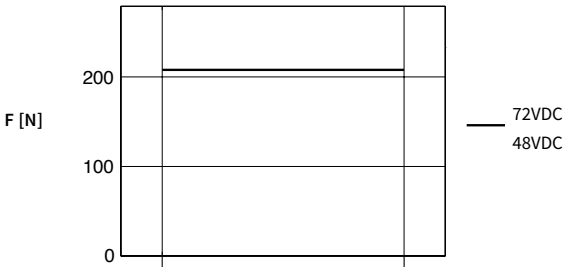

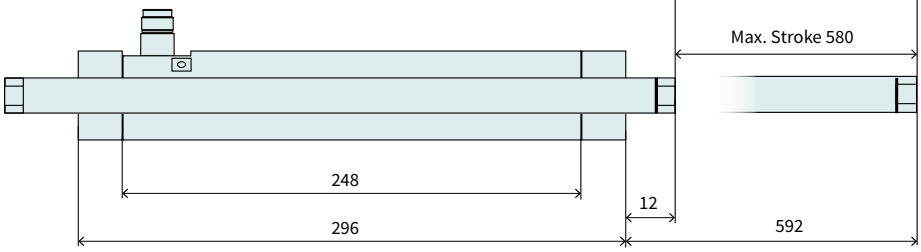

Dimensions in mm

Technical Data P01-37x120F/580-HP-PB24-SSC				
Stroke				
Max. Stroke	mm	(in)	580	(22.8)
Force				
Max. Force @ 48VDC	N	(lbf)	210	(47.1)
Max. Force @ 72VDC	N	(lbf)	210	(47.1)
Max. Cont. Force [Passive cooling/ Fan / Fluid]	N	(lbf)	23 / - / 63	(5.3 / - / 14)
Max. Border Force relative	%		100	
Force Constant	N/A_{pk}	(lbf/A_{pk})	14	(3.14)
Velocity				
Max. Velocity @ 48VDC	m/s	(in/s)	3.2	(119.9)
Max. Velocity @ 72VDC	m/s	(in/s)	4.6	(189.9)
Position Detection				
Repeatability	mm	(in)	±0.05	(±0.002)
Linearity	%		± 0.2	
Electrical Data				
Max. Current @ 48VDC	A_{pk}		14.9	
Max. Current @ 72VDC	A_{pk}		14.9	
Max. Cont. Current [Passive cooling /Fan / Fluid]	A_{pk}		1.7 / - / 4.5	
Thermal Data				
Max. Winding Temperature (Sensor)	°C		120	
Thermal Resistance [Passive cooling / Fan / Fluid]	°K/W		8.3 / - / 1.1	
Thermal Time Constant [Passive cooling / Fan / Fluid]	s		3300 / - / 450	
Mechanical Data				
Slider Length	mm	(in)	900	(35)
Slider Mass	g	(lb)	1590	(3.5)





Item	Description	Item-No.
PS01-37x120F-HP-SSC-R	Stator Stainless Steel IP69K	0150-1282
PS01-37x120F-HP-SSC-R-FC	Stator stainless steel IP69K, FC	0150-1283
PL01-19x900/820	Slider 'High Clearance'	0150-1459

P01-37x120F/680-PB24-HP-SSC

Max. Stroke: 680 mm
Peak Force: 210 N

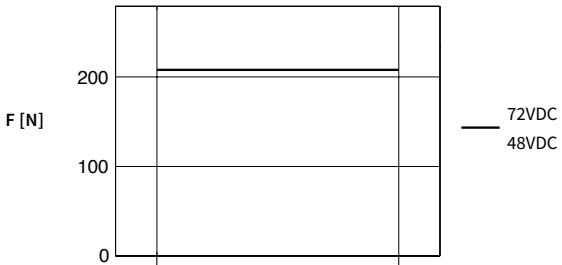

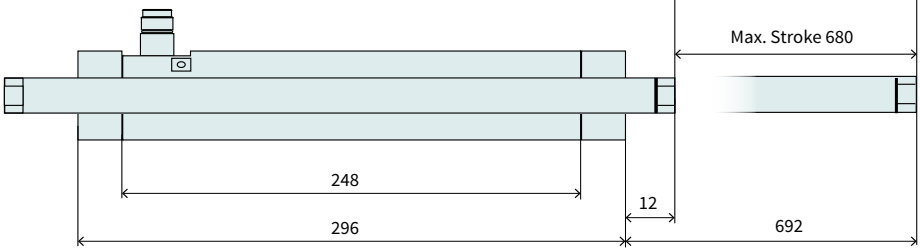

Dimensions in mm

Technical Data P01-37x120F/680-HP-PB24-SSC				
Stroke				
Max. Stroke	mm	(in)	680	(26.8)
Force				
Max. Force @ 48VDC	N	(lbf)	210	(47.1)
Max. Force @ 72VDC	N	(lbf)	210	(47.1)
Max. Cont. Force [Passive cooling/ Fan / Fluid]	N	(lbf)	23 / - / 63	(5.3 / - / 14)
Max. Border Force relative	%		100	
Force Constant	N/A_{pk}	(lbf/A_{pk})	14	(3.14)
Velocity				
Max. Velocity @ 48VDC	m/s	(in/s)	3.2	(119.9)
Max. Velocity @ 72VDC	m/s	(in/s)	4.6	(189.9)
Position Detection				
Repeatability	mm	(in)	±0.05	(±0.002)
Linearity	%		± 0.15	
Electrical Data				
Max. Current @ 48VDC	A_{pk}		14.9	
Max. Current @ 72VDC	A_{pk}		14.9	
Max. Cont. Current [Passive cooling /Fan / Fluid]	A_{pk}		1.7 / - / 4.5	
Thermal Data				
Max. Winding Temperature (Sensor)	°C		120	
Thermal Resistance [Passive cooling / Fan / Fluid]	°K/W		8.3 / - / 1.1	
Thermal Time Constant [Passive cooling / Fan / Fluid]	s		3300 / - / 450	
Mechanical Data				
Slider Length	mm	(in)	1000	(39)
Slider Mass	g	(lb)	1800	(3.96)





Item	Description	Item-No.
PS01-37x120F-HP-SSC-R	Stator Stainless Steel IP69K	0150-1282
PS01-37x120F-HP-SSC-R-FC	Stator stainless steel IP69K, FC	0150-1283
PL01-19x1000/920	Slider 'High Clearance'	0150-1460

Linear Guides H01-SSC



HM01-37x120/85-SSC	**Linear module SSC 37x120 with 85 mm Stroke**			
→	H-Guide	H01-37x304/85-SSC	H-Guide for PS01-37x120F-HP-SSC, Stroke max.85 mm	0150-5271
→	Stator	PS01-37x120F-HP-SSC-R	Stator Stainless Steel IP69K	0150-1282
		PS01-37x120F-HP-SSC-R-FC	Stator stainless steel IP69K, FC	0150-1283
→	Slider	PL01-19x395/320	Slider 'High Clearance'	0150-1452
HM01-37x120/190-SSC	**Linear module SSC 37x120 with 190 mm Stroke**			
→	H-Guide	H01-37x304/190-SSC	H-Guide for PS01-37x120F-HP-SSC, Stroke max.190 mm	0150-5272
→	Stator	PS01-37x120F-HP-SSC-R	Stator Stainless Steel IP69K	0150-1282
		PS01-37x120F-HP-SSC-R-FC	Stator stainless steel IP69K, FC	0150-1283
→	Slider	PL01-19x500/420	Slider 'High Clearance'	0150-1455
HM01-37x120/290-SSC	**Linear module SSC 37x120 with 290 mm Stroke**			
→	H-Guide	H01-37x304/290-SSC	H-Guide for PS01-37x120F-HP-SSC, Stroke max.290 mm	0150-5273
→	Stator	PS01-37x120F-HP-SSC-R	Stator Stainless Steel IP69K	0150-1282
		PS01-37x120F-HP-SSC-R-FC	Stator stainless steel IP69K, FC	0150-1283
→	Slider	PL01-19x600/520	Slider 'High Clearance'	0150-1456
HM01-37x120/390-SSC	**Linear module SSC 37x120 with 390 mm Stroke**			
→	H-Guide	H01-37x304/390-SSC	H-Guide for PS01-37x120F-HP-SSC, Stroke max.390 mm	0150-5274
→	Stator	PS01-37x120F-HP-SSC-R	Stator Stainless Steel IP69K	0150-1282
		PS01-37x120F-HP-SSC-R-FC	Stator stainless steel IP69K, FC	0150-1283
→	Slider	PL01-19x700/620	Slider 'High Clearance'	0150-1457

FIND MORE PRODUCT DETAILS IN THE CHAPTER "LINEAR GUIDES".

Motor Cable

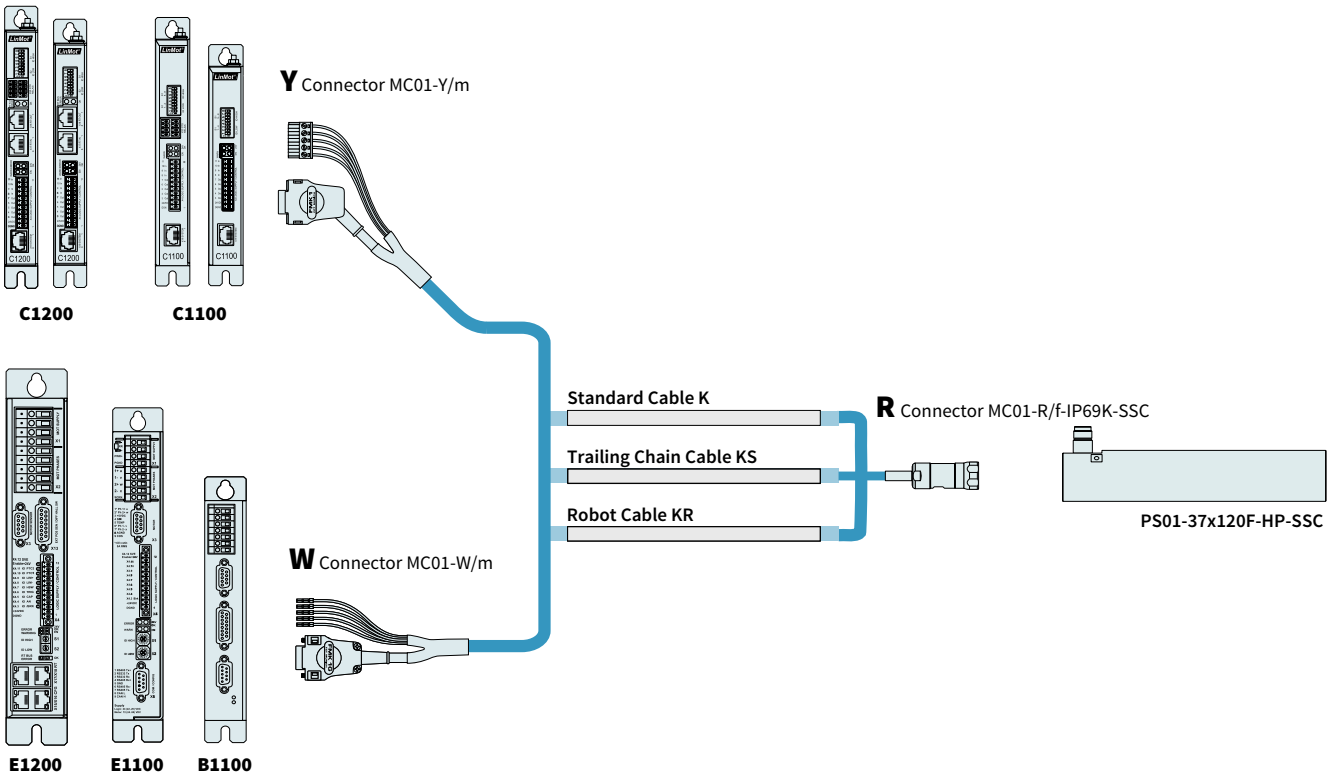

ORDERING INFORMATION

TRAILING CHAIN CABLE		
Item	**Description**	**Item-No.**
KS05-W/R-SSC-2	Trailing Chain Cable W/R-SSC, 2 m	0150-2683
KS05-W/R-SSC-4	Trailing Chain Cable W/R-SSC, 4 m	0150-2684
KS05-W/R-SSC-6	Trailing Chain Cable W/R-SSC, 6 m	0150-2685
KS05-W/R-SSC-8	Trailing Chain Cable W/R-SSC, 8 m	0150-2686
KS05-W/R-SSC-	Trailing Chain Cable W/R-SSC, Custom length	0150-3583
KS05-Y/R-SSC-2	Trailing Chain Cable Y/R-SSC, 2 m	0150-2687
KS05-Y/R-SSC-4	Trailing Chain Cable Y/R-SSC, 4 m	0150-2688
KS05-Y/R-SSC-6	Trailing Chain Cable Y/R-SSC, 6 m	0150-2689
KS05-Y/R-SSC-8	Trailing Chain Cable Y/R-SSC, 8 m	0150-2690
KS05-Y-Fe/R-SSC-	Trailing Chain Cable Y-Fe/R-SSC, Custom length	0150-3646

ROBOT CABLE		
Item	**Description**	**Item-No.**
KR05-W/R-SSC-	Robot Cable KR05-W/R-SSC-, Custom length	0150-3587

CONNECTOR & CABLE (INDIVIDUAL)		
Item	**Description**	**Item-No.**
MC01-W/m	Motor Connector W/m	0150-3140
MC01-Y-Fe/m	Motor Connector Y-Fe/m	0150-3289
MC01-R/f-IP69K-SSC	Motor Connector R/f, IP69k, SSC	0150-3347
K05-04/05	Motor Cable per m	0150-1920
KS05-04/05	Trailing Chain Cable per m	0150-1938
KR05-04/05	Robot Cable per m	0150-1846

SLIDER MOUNTING





Item	Description	Item-No.
PLF01-20-SS	Fixed Bearing Set for 19/20 mm sliders, stainless steel	0150-3296
PLL01-19	Floating support for PL01-19 sliders, Material 1.4305 / AISI 303	0150-3335

FIND MORE PRODUCT DETAILS IN THE CHAPTER "ACCESSORIES".

BEARING KITS



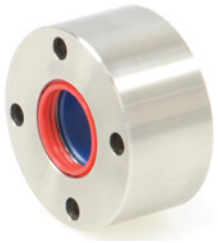

Item	Description	Item-No.
PB02-37x24-P-WD	Bearing for PS01-37x...-SSC (Plastic)	0150-3299
PB01-37x24-P-SSC	Bearing for PS01-37x...-SSC, stainless steel	0150-3290

FIND MORE PRODUCT DETAILS IN THE CHAPTER "ACCESSORIES".

EXTERNAL POSITION SENSORS



Item	Description	Item-No.
MS01-1/D	Linear Encoder 1µm, A/B (for incremental strip)	0150-1840
MB01-1000	Magnetic incremental strip for MS01-1/D, per cm	0150-1963
KS025-D/D-Encoder	Special cable KS025-D15/D-Encoder-	0150-3166
KS025-D/D15-Encoder	Special cable KS025-D15/D-Encoder-	0150-3168

FIND MORE PRODUCT DETAILS IN THE CHAPTER "ACCESSORIES".



Item	Description	Item-No.
MS01-1/D-SSI	Linear Encoder 1µm, A/B (for absolute strip)	0150-2095
MB01-1000-ABS	Magnetic absolute strip for MS01-1/D-SSI (per cm)	0150-2096
EC01-ABS/ENC-12-S	MS01-1/D-SSI Encoder connector straigth	0150-3616
KSS01-12-D15/ABS-ENC	For MS01-1/D-SSI on C1100/C1200/C1400/E1200/E1400 Drives	0150-3652

FIND MORE PRODUCT DETAILS IN THE CHAPTER "ACCESSORIES".

LINEAR MOTORS P01-48x240F-SSC

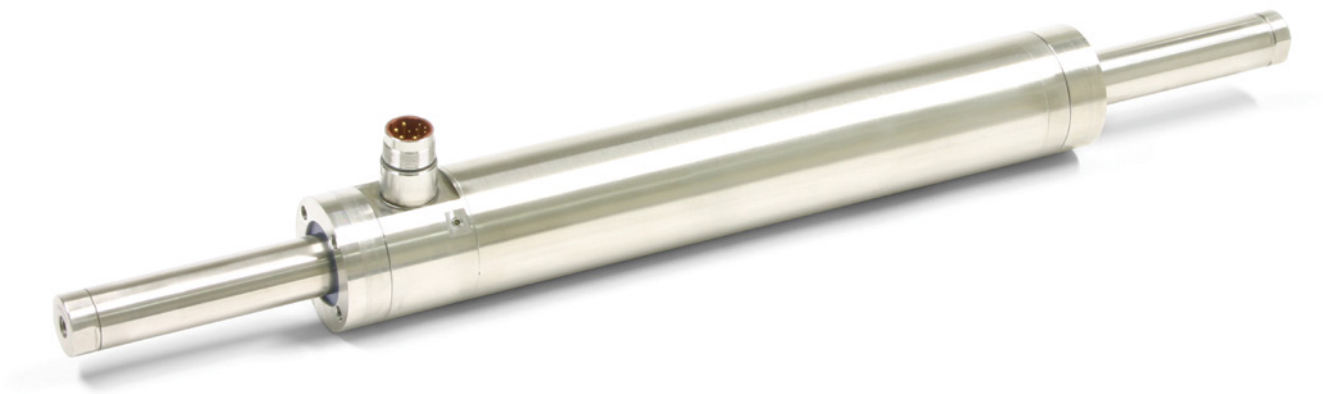

- Stainless steel housing EN 1.4404 / AISI / SAE 316L
- Hygienic design
- Welded connections, no gaskets
- Completely encapsulated (IP69K)
- Protection class IP69K
- Optional integrated water cooling
- For use in the food or in the pharmaceutical sector

5

LINEAR MOTORS P01-48x240F-SSC

Technical Data ____ **641**

Motor Specifications

P01-48x240F/80-PB25-SSC **644**

P01-48x240F/200-PB25-SSC **645**

P01-48x240F/290-PB25-SSC **646**

P01-48x240F/380-PB25-SSC **647**

P01-48x240F/500-PB25-SSC **648**

P01-48x240F/590-PB25-SSC **649**

P01-48x240F/800-PB25-SSC **650**

P01-48x240F/980-PB25-SSC **651**

Linear Guides ____ **652**

Accessories ____ **653**

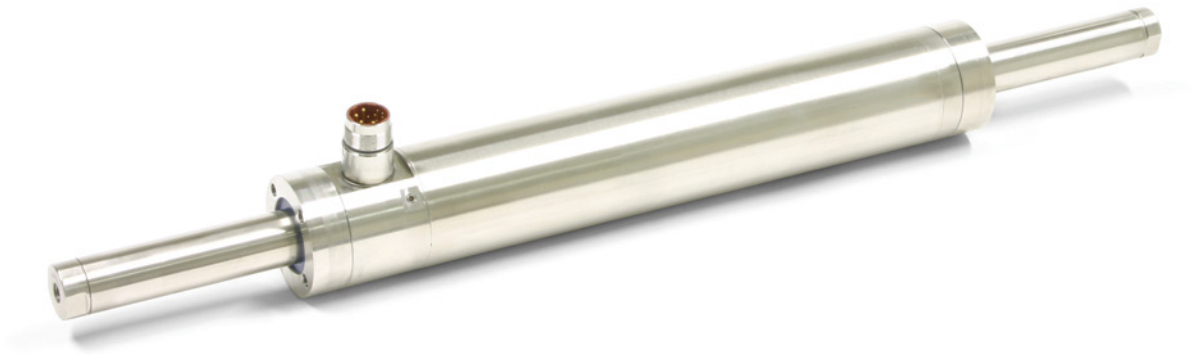

MOTOR FAMILY P01-48x240F-SSC

Technical Data				
Stroke				
Max. Stroke	mm	(in)	980	(38.6)
Force				
Max. Force @ 48VDC	N	(lbf)	496	(111)
Max. Force @ 72VDC	N	(lbf)	496	(111)
Max. Cont. Force [Passive cooling/ Fan / Fluid]	N	(lbf)	84 / - / 240	(19 / - / 53)
Max. Border Force relative	%		≤ 100	
Force Constant	N/A_{pk}	(lbf/A_{pk})	19.1	(4.29)
Velocity				
Max. Velocity @ 48VDC	m/s	(in/s)	2.2	(90.9)
Max. Velocity @ 72VDC	m/s	(in/s)	3.4	(139.9)
Position Detection				
Position Resolution	mm	(in)	0.007	(0.0003)
Repeatability	mm	(in)	±0.05	(±0.002)
Position Resolution with ES	mm	(in)	0.001	(0.00004)
Repeatability with ES	mm	(in)	±0.01	(±0.0004)
Linearity with ES	mm	(in)	±0.01	(±0.0004)
Electrical Data				
Max. Current @ 48VDC	A_{pk}		25.9	
Max. Current @ 72VDC	A_{pk}		25.9	
Max. Cont. Current [Passive cooling /Fan / Fluid]	A_{pk}		4.4 / - / 12	
Terminal Resistance 25 °C / 120 °C	Ohm		0.97 / 1.3	
Terminal Inductivity	mH		1.1	
Magnetic Period	mm	(in)	60	(2.35)
Thermal Data				
Max. Winding Temperature (Sensor)	°C		90	
Thermal Resistance [Passive cooling / Fan / Fluid]	°K/W		2 / - / 0.26	
Thermal Time Constant [Passive cooling / Fan / Fluid]	s		2100 / - / 260	
Mechanical Data				
Stator Diameter	mm	(in)	60	(2.4)
Stator Length [Connector type / Cable type]	mm	(in)	395	(16)
Stator Mass	g	(lb)	4270	(9.4)
Slider Diameter	mm	(in)	27	(1.1)
Slider Length	mm	(in)	350 - 1400	(14 - 55)
Slider Mass	g	(lb)	1360 - 5910	(3 - 13)
IP Code			IP 69k	

STATOR

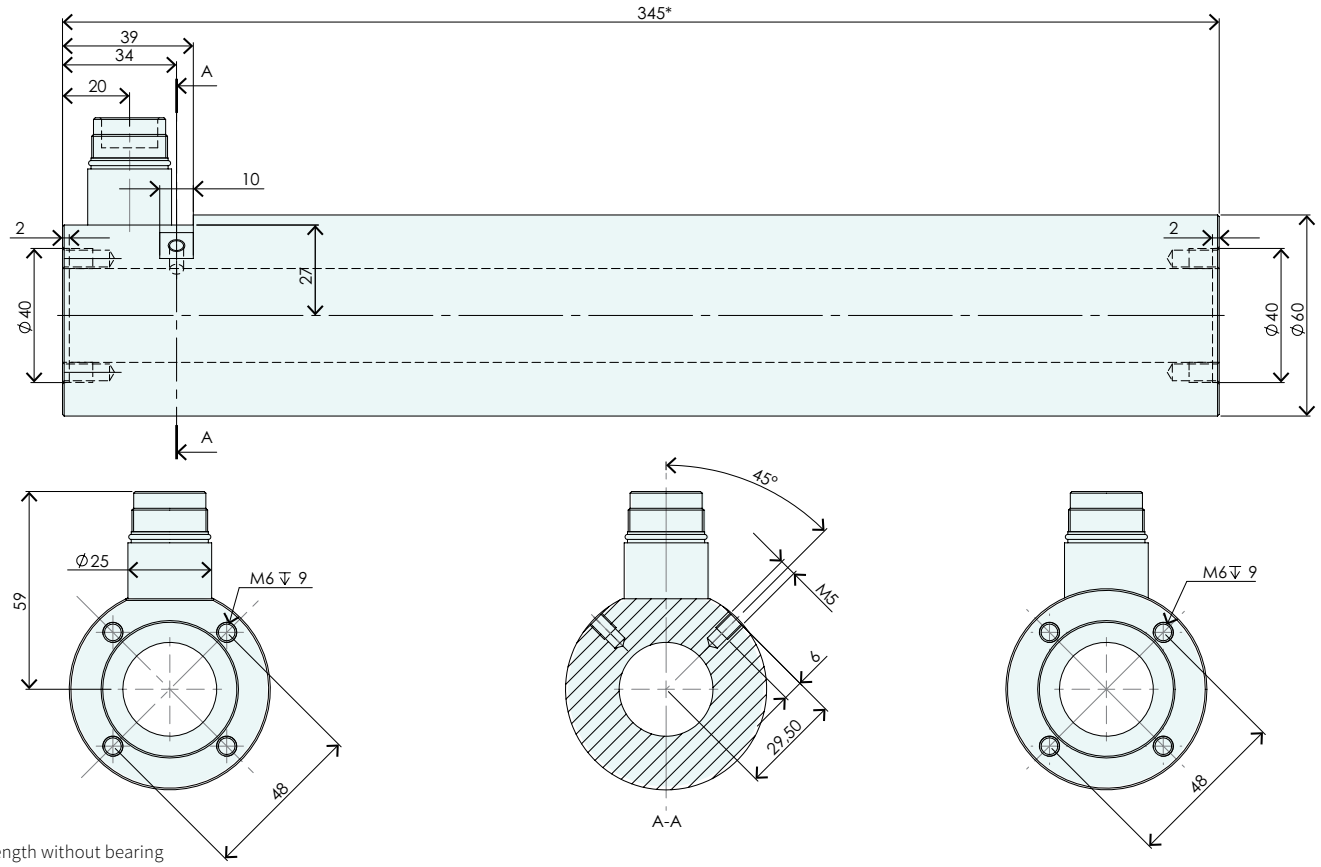

* Length without bearing

Item	Description	Item-No.
PS01-48x240F-SSC-C	Stator Stainless Steel IP69K	0150-1267
PS01-48x240F-SSC-C-FC	Stator stainless steel IP69K, FC	0150-1268

CONNECTOR

Motor Connector Wiring	PS01-48x240F-SSC-C PS01-48x240F-SSC-C-FC C-Connector	Wire Color Motor Cable
Ph 1+	A	red
Ph 1-	B	pink
Ph 2+	C	blue
Ph 2-	D	grey
+5VDC	E	white
GND	F	inner Shield
Sinus	G	yellow
Cosinus	H	green
Temp.	L	black
Shield	Case	outer Shield

C-Connector

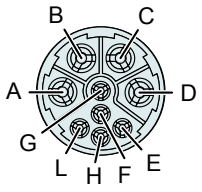

View: Motor connector, plug side

SLIDER

Slider High Clearance

Number of grooves determines the slider type (see chapter 2 / slider) and marks the front end.

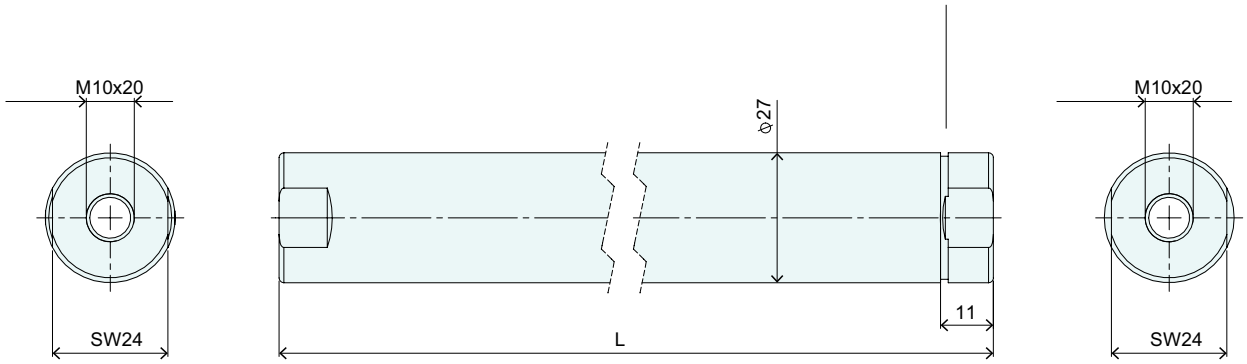

Slider High Clearance			
Item	Description	Max. Stroke [mm]	Item-No.
PL01-27x500/420	Slider 'High Clearance'	80	0150-1469
PL01-27x620/540	Slider 'High Clearance'	200	0150-1470
PL01-27x710/630	Slider 'High Clearance'	290	0150-1471
PL01-27x800/720	Slider 'High Clearance'	380	0150-1472
PL01-27x920/840	Slider 'High Clearance'	500	0150-1447
PL01-27x1010/930	Slider 'High Clearance'	590	0150-1473
PL01-27x1220/1140	Slider 'High Clearance'	800	0150-1587
PL01-27x1400/1320	Slider 'High Clearance'	980	0150-1588

P01-48x240F/80-PB25-SSC

Max. Stroke: 80 mm
Peak Force: 496 N

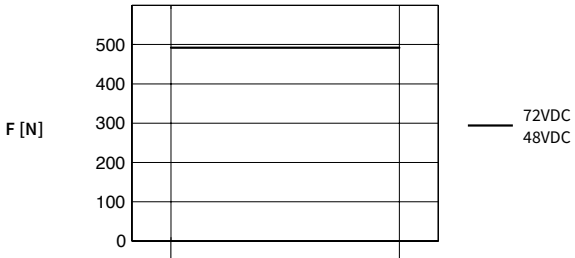

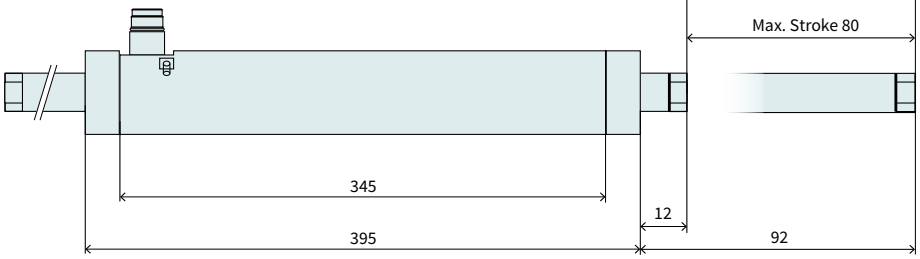

Dimensions in mm

Technical Data P01-48x240F/80-PB25-SSC				
Stroke				
Max. Stroke	mm	(in)	80	(3.14)
Force				
Max. Force @ 48VDC	N	(lbf)	496	(111)
Max. Force @ 72VDC	N	(lbf)	496	(111)
Max. Cont. Force [Passive cooling/ Fan / Fluid]	N	(lbf)	84 / - / 240	(19 / - / 53)
Max. Border Force relative	%		100	
Force Constant	N/A_{pk}	(lbf/A_{pk})	19.1	(4.29)
Velocity				
Max. Velocity @ 48VDC	m/s	(in/s)	2.2	(90.9)
Max. Velocity @ 72VDC	m/s	(in/s)	3.4	(139.9)
Position Detection				
Repeatability	mm	(in)	±0.05	(±0.002)
Linearity	%		± 1.05	
Electrical Data				
Max. Current @ 48VDC	A_{pk}		25.9	
Max. Current @ 72VDC	A_{pk}		25.9	
Max. Cont. Current [Passive cooling /Fan / Fluid]	A_{pk}		4.4 / - / 12	
Thermal Data				
Max. Winding Temperature (Sensor)	°C		90	
Thermal Resistance [Passive cooling / Fan / Fluid]	°K/W		2 / - / 0.26	
Thermal Time Constant [Passive cooling / Fan / Fluid]	s		2100 / - / 260	
Mechanical Data				
Slider Length	mm	(in)	500	(20)
Slider Mass	g	(lb)	2010	(4.42)

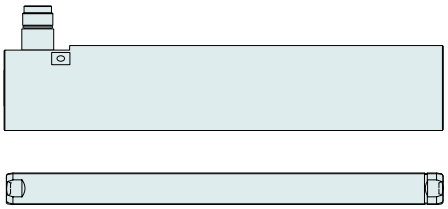

Item	Description	Item-No.
PS01-48x240F-SSC-C	Stator Stainless Steel IP69K	0150-1267
PS01-48x240F-SSC-C-FC	Stator stainless steel IP69K, FC	0150-1268
PL01-27x500/420	Slider 'High Clearance'	0150-1469

P01-48x240F/200-PB25-SSC

Max. Stroke: 200 mm
Peak Force: 496 N

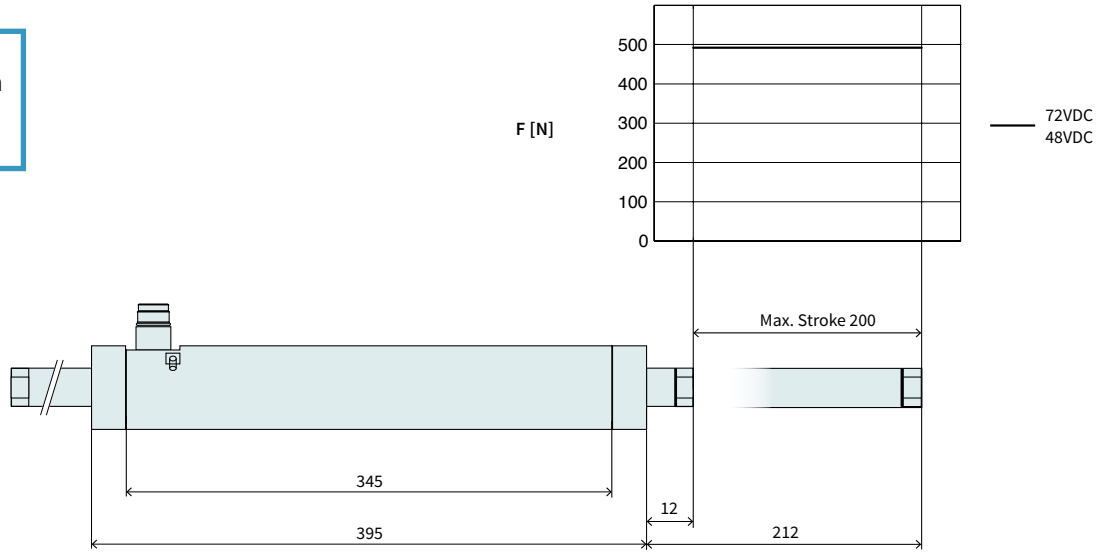

Dimensions in mm

Technical Data P01-48x240F/200-PB25-SSC				
Stroke				
Max. Stroke	mm	(in)	200	(7.86)
Force				
Max. Force @ 48VDC	N	(lbf)	496	(111)
Max. Force @ 72VDC	N	(lbf)	496	(111)
Max. Cont. Force [Passive cooling/ Fan / Fluid]	N	(lbf)	84 / - / 240	(19 / - / 53)
Max. Border Force relative	%		100	
Force Constant	N/A_{pk}	(lbf/A_{pk})	19.1	(4.29)
Velocity				
Max. Velocity @ 48VDC	m/s	(in/s)	2.2	(90.9)
Max. Velocity @ 72VDC	m/s	(in/s)	3.4	(139.9)
Position Detection				
Repeatability	mm	(in)	±0.05	(±0.002)
Linearity	%		± 0.5	
Electrical Data				
Max. Current @ 48VDC	A_{pk}		25.9	
Max. Current @ 72VDC	A_{pk}		25.9	
Max. Cont. Current [Passive cooling /Fan / Fluid]	A_{pk}		4.4 / - / 12	
Thermal Data				
Max. Winding Temperature (Sensor)	°C		90	
Thermal Resistance [Passive cooling / Fan / Fluid]	°K/W		2 / - / 0.26	
Thermal Time Constant [Passive cooling / Fan / Fluid]	s		2100 / - / 260	
Mechanical Data				
Slider Length	mm	(in)	620	(24)
Slider Mass	g	(lb)	2530	(5.57)

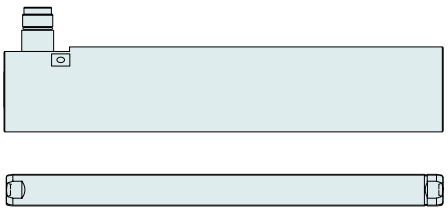

Item	Description	Item-No.
PS01-48x240F-SSC-C	Stator Stainless Steel IP69K	0150-1267
PS01-48x240F-SSC-C-FC	Stator stainless steel IP69K, FC	0150-1268
PL01-27x620/540	Slider 'High Clearance'	0150-1470

P01-48x240F/290-PB25-SSC

Max. Stroke: 290 mm
Peak Force: 496 N

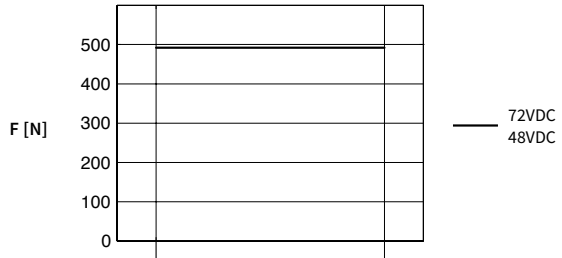

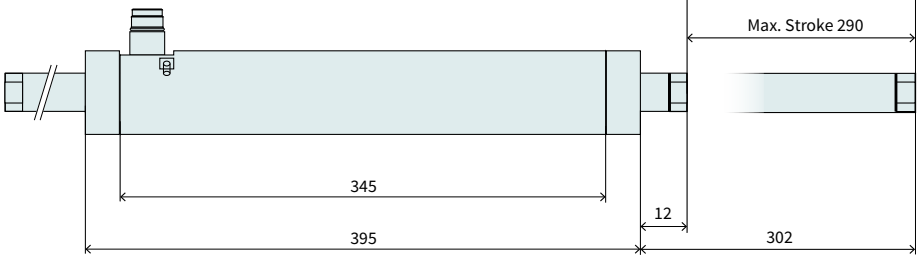

Dimensions in mm

Technical Data P01-48x240F/290-PB25-SSC				
Stroke				
Max. Stroke	mm	(in)	290	(11.4)
Force				
Max. Force @ 48VDC	N	(lbf)	496	(111)
Max. Force @ 72VDC	N	(lbf)	496	(111)
Max. Cont. Force [Passive cooling/ Fan / Fluid]	N	(lbf)	84 / - / 240	(19 / - / 53)
Max. Border Force relative	%		100	
Force Constant	N/A_{pk}	(lbf/A_{pk})	19.1	(4.29)
Velocity				
Max. Velocity @ 48VDC	m/s	(in/s)	2.2	(90.9)
Max. Velocity @ 72VDC	m/s	(in/s)	3.4	(139.9)
Position Detection				
Repeatability	mm	(in)	±0.05	(±0.002)
Linearity	%		± 0.35	
Electrical Data				
Max. Current @ 48VDC	A_{pk}		25.9	
Max. Current @ 72VDC	A_{pk}		25.9	
Max. Cont. Current [Passive cooling /Fan / Fluid]	A_{pk}		4.4 / - / 12	
Thermal Data				
Max. Winding Temperature (Sensor)	°C		90	
Thermal Resistance [Passive cooling / Fan / Fluid]	°K/W		2 / - / 0.26	
Thermal Time Constant [Passive cooling / Fan / Fluid]	s		2100 / - / 260	
Mechanical Data				
Slider Length	mm	(in)	710	(28)
Slider Mass	g	(lb)	2920	(6.42)

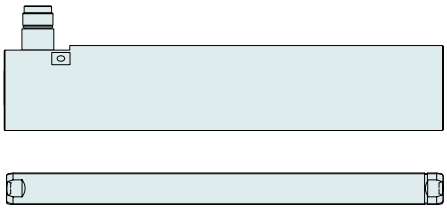

Item	Description	Item-No.
PS01-48x240F-SSC-C	Stator Stainless Steel IP69K	0150-1267
PS01-48x240F-SSC-C-FC	Stator stainless steel IP69K, FC	0150-1268
PL01-27x710/630	Slider 'High Clearance'	0150-1471

P01-48x240F/380-PB25-SSC

Max. Stroke: 380 mm
Peak Force: 496 N

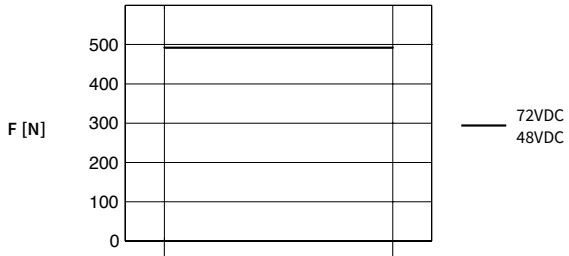

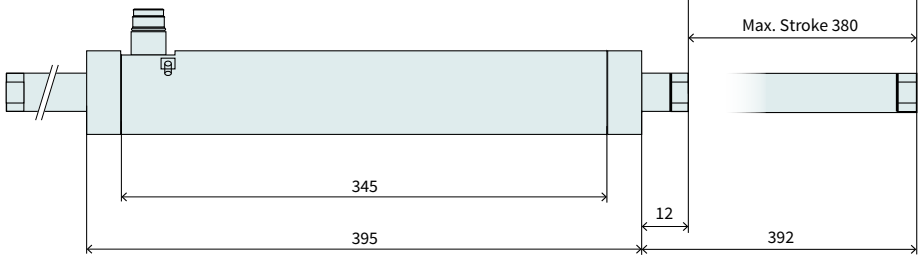

Dimensions in mm

Technical Data P01-48x240F/380-PB25-SSC				
Stroke				
Max. Stroke	mm	(in)	380	(14.99)
Force				
Max. Force @ 48VDC	N	(lbf)	496	(111)
Max. Force @ 72VDC	N	(lbf)	496	(111)
Max. Cont. Force [Passive cooling/ Fan / Fluid]	N	(lbf)	84 / - / 240	(19 / - / 53)
Max. Border Force relative	%		100	
Force Constant	N/A_{pk}	(lbf/A_{pk})	19.1	(4.29)
Velocity				
Max. Velocity @ 48VDC	m/s	(in/s)	2.2	(90.9)
Max. Velocity @ 72VDC	m/s	(in/s)	3.4	(139.9)
Position Detection				
Repeatability	mm	(in)	±0.05	(±0.002)
Linearity	%		± 0.3	
Electrical Data				
Max. Current @ 48VDC	A_{pk}		25.9	
Max. Current @ 72VDC	A_{pk}		25.9	
Max. Cont. Current [Passive cooling /Fan / Fluid]	A_{pk}		4.4 / - / 12	
Thermal Data				
Max. Winding Temperature (Sensor)	°C		90	
Thermal Resistance [Passive cooling / Fan / Fluid]	°K/W		2 / - / 0.26	
Thermal Time Constant [Passive cooling / Fan / Fluid]	s		2100 / - / 260	
Mechanical Data				
Slider Length	mm	(in)	800	(31)
Slider Mass	g	(lb)	3310	(7.28)

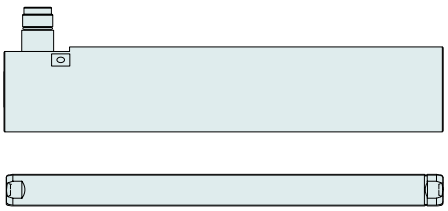

Item	Description	Item-No.
PS01-48x240F-SSC-C	Stator Stainless Steel IP69K	0150-1267
PS01-48x240F-SSC-C-FC	Stator stainless steel IP69K, FC	0150-1268
PL01-27x800/720	Slider 'High Clearance'	0150-1472

P01-48x240F/500-PB25-SSC

Max. Stroke: 500 mm
Peak Force: 496 N

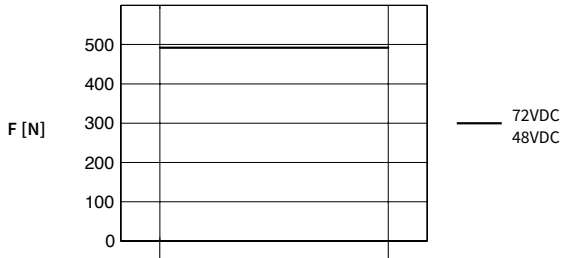

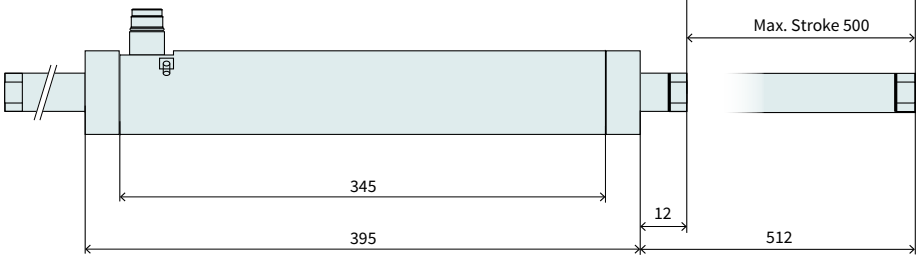

Dimensions in mm

Technical Data P01-48x240F/500-PB25-SSC				
Stroke				
Max. Stroke	mm	(in)	500	(19.69)
Force				
Max. Force @ 48VDC	N	(lbf)	496	(111)
Max. Force @ 72VDC	N	(lbf)	496	(111)
Max. Cont. Force [Passive cooling/ Fan / Fluid]	N	(lbf)	84 / - / 240	(19 / - / 53)
Max. Border Force relative	%		100	
Force Constant	N/A_{pk}	(lbf/A_{pk})	19.1	(4.29)
Velocity				
Max. Velocity @ 48VDC	m/s	(in/s)	2.2	(90.9)
Max. Velocity @ 72VDC	m/s	(in/s)	3.4	(139.9)
Position Detection				
Repeatability	mm	(in)	±0.05	(±0.002)
Linearity	%		± 0.25	
Electrical Data				
Max. Current @ 48VDC	A_{pk}		25.9	
Max. Current @ 72VDC	A_{pk}		25.9	
Max. Cont. Current [Passive cooling /Fan / Fluid]	A_{pk}		4.4 / - / 12	
Thermal Data				
Max. Winding Temperature (Sensor)	°C		90	
Thermal Resistance [Passive cooling / Fan / Fluid]	°K/W		2 / - / 0.26	
Thermal Time Constant [Passive cooling / Fan / Fluid]	s		2100 / - / 260	
Mechanical Data				
Slider Length	mm	(in)	920	(36)
Slider Mass	g	(lb)	3830	(8.43)

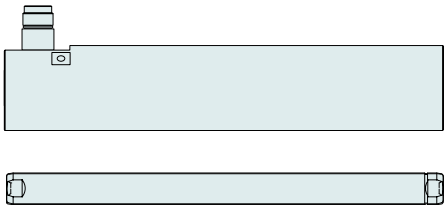

Item	Description	Item-No.
PS01-48x240F-SSC-C	Stator Stainless Steel IP69K	0150-1267
PS01-48x240F-SSC-C-FC	Stator stainless steel IP69K, FC	0150-1268
PL01-27x920/840	Slider 'High Clearance'	0150-1447

P01-48x240F/590-PB25-SSC

Max. Stroke: 590 mm
Peak Force: 496 N

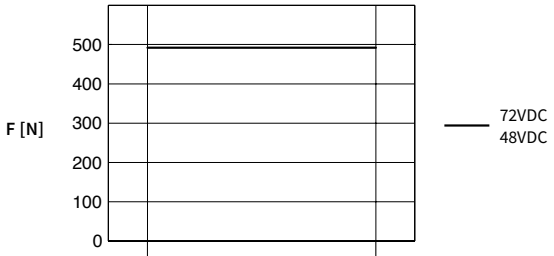

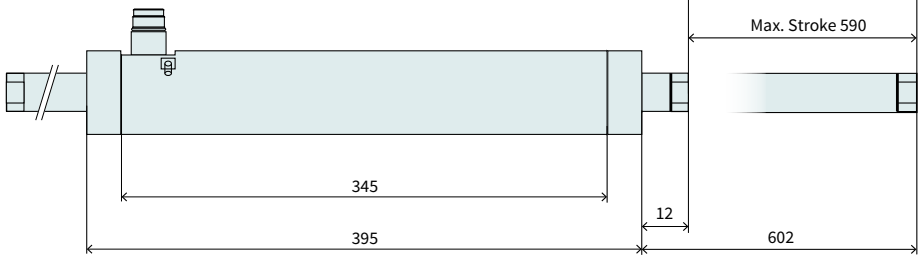

Dimensions in mm

Technical Data P01-48x240F/590-PB25-SSC				
Stroke				
Max. Stroke	mm	(in)	590	(23.19)
Force				
Max. Force @ 48VDC	N	(lbf)	496	(111)
Max. Force @ 72VDC	N	(lbf)	496	(111)
Max. Cont. Force [Passive cooling/ Fan / Fluid]	N	(lbf)	84 / - / 240	(19 / - / 53)
Max. Border Force relative	%		100	
Force Constant	N/A_{pk}	(lbf/A_{pk})	19.1	(4.29)
Velocity				
Max. Velocity @ 48VDC	m/s	(in/s)	2.2	(90.9)
Max. Velocity @ 72VDC	m/s	(in/s)	3.4	(139.9)
Position Detection				
Repeatability	mm	(in)	±0.05	(±0.002)
Linearity	%		± 0.25	
Electrical Data				
Max. Current @ 48VDC	A_{pk}		25.9	
Max. Current @ 72VDC	A_{pk}		25.9	
Max. Cont. Current [Passive cooling /Fan / Fluid]	A_{pk}		4.4 / - / 12	
Thermal Data				
Max. Winding Temperature (Sensor)	°C		90	
Thermal Resistance [Passive cooling / Fan / Fluid]	°K/W		2 / - / 0.26	
Thermal Time Constant [Passive cooling / Fan / Fluid]	s		2100 / - / 260	
Mechanical Data				
Slider Length	mm	(in)	1010	(40)
Slider Mass	g	(lb)	4220	(9.28)

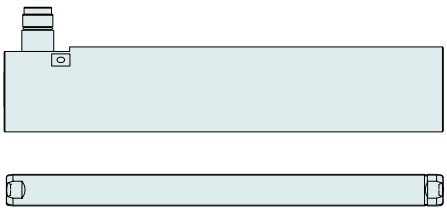

Item	Description	Item-No.
PS01-48x240F-SSC-C	Stator Stainless Steel IP69K	0150-1267
PS01-48x240F-SSC-C-FC	Stator stainless steel IP69K, FC	0150-1268
PL01-27x1010/930	Slider 'High Clearance'	0150-1473

P01-48x240F/800-PB25-SSC

Max. Stroke: 800 mm
Peak Force: 496 N

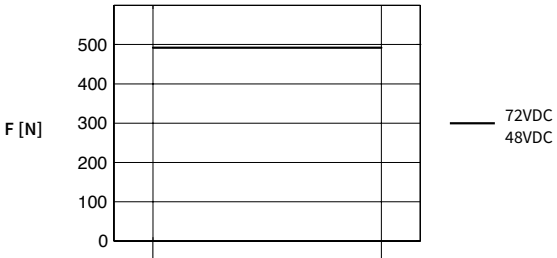

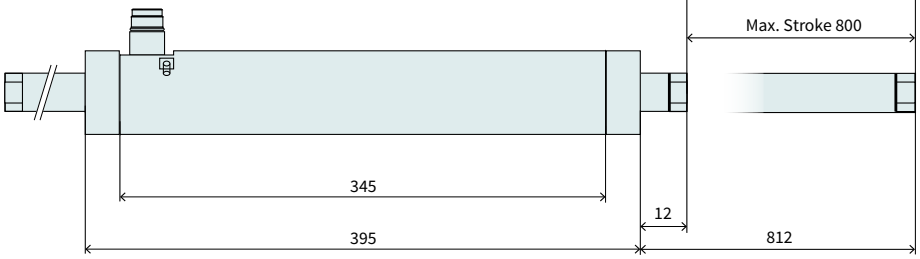

Dimensions in mm

Technical Data P01-48x240F/800-PB25-SSC				
Stroke				
Max. Stroke	mm	(in)	800	(31.49)
Force				
Max. Force @ 48VDC	N	(lbf)	496	(111)
Max. Force @ 72VDC	N	(lbf)	496	(111)
Max. Cont. Force [Passive cooling/ Fan / Fluid]	N	(lbf)	84 / - / 240	(19 / - / 53)
Max. Border Force relative	%		100	
Force Constant	N/A_{pk}	(lbf/A_{pk})	19.1	(4.29)
Velocity				
Max. Velocity @ 48VDC	m/s	(in/s)	2.2	(90.9)
Max. Velocity @ 72VDC	m/s	(in/s)	3.4	(139.9)
Position Detection				
Repeatability	mm	(in)	±0.05	(±0.002)
Linearity	%		± 0.2	
Electrical Data				
Max. Current @ 48VDC	A_{pk}		25.9	
Max. Current @ 72VDC	A_{pk}		25.9	
Max. Cont. Current [Passive cooling /Fan / Fluid]	A_{pk}		4.4 / - / 12	
Thermal Data				
Max. Winding Temperature (Sensor)	°C		90	
Thermal Resistance [Passive cooling / Fan / Fluid]	°K/W		2 / - / 0.26	
Thermal Time Constant [Passive cooling / Fan / Fluid]	s		2100 / - / 260	
Mechanical Data				
Slider Length	mm	(in)	1220	(48)
Slider Mass	g	(lb)	5130	(11.29)

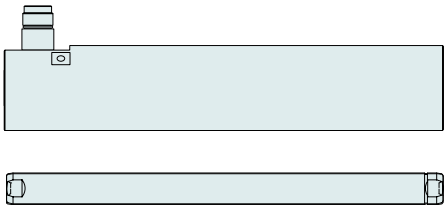

Item	Description	Item-No.
PS01-48x240F-SSC-C	Stator Stainless Steel IP69K	0150-1267
PS01-48x240F-SSC-C-FC	Stator stainless steel IP69K, FC	0150-1268
PL01-27x1220/1140	Slider 'High Clearance'	0150-1587

P01-48x240F/980-PB25-SSC

Max. Stroke: 980 mm
Peak Force: 496 N

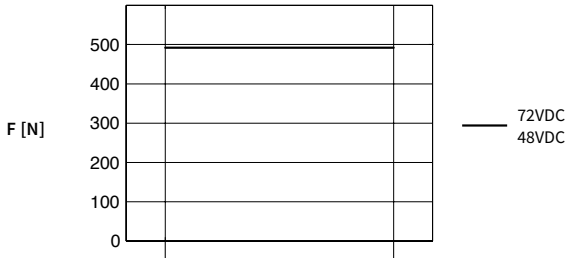

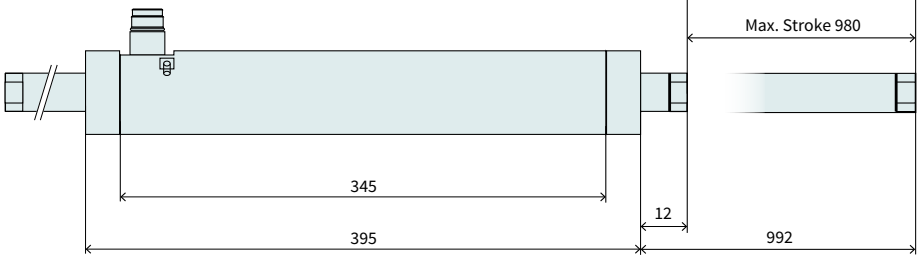

Dimensions in mm

Technical Data P01-48x240F/980-PB25-SSC				
Stroke				
Max. Stroke	mm	(in)	980	(38.6)
Force				
Max. Force @ 48VDC	N	(lbf)	496	(111)
Max. Force @ 72VDC	N	(lbf)	496	(111)
Max. Cont. Force [Passive cooling/ Fan / Fluid]	N	(lbf)	84 / - / 240	(19 / - / 53)
Max. Border Force relative	%		100	
Force Constant	N/A_{pk}	(lbf/A_{pk})	19.1	(4.29)
Velocity				
Max. Velocity @ 48VDC	m/s	(in/s)	2.2	(90.9)
Max. Velocity @ 72VDC	m/s	(in/s)	3.4	(139.9)
Position Detection				
Repeatability	mm	(in)	±0.05	(±0.002)
Linearity	%		± 0.2	
Electrical Data				
Max. Current @ 48VDC	A_{pk}		25.9	
Max. Current @ 72VDC	A_{pk}		25.9	
Max. Cont. Current [Passive cooling /Fan / Fluid]	A_{pk}		4.4 / - / 12	
Thermal Data				
Max. Winding Temperature (Sensor)	°C		90	
Thermal Resistance [Passive cooling / Fan / Fluid]	°K/W		2 / - / 0.26	
Thermal Time Constant [Passive cooling / Fan / Fluid]	s		2100 / - / 260	
Mechanical Data				
Slider Length	mm	(in)	1400	(55)
Slider Mass	g	(lb)	5910	(13)

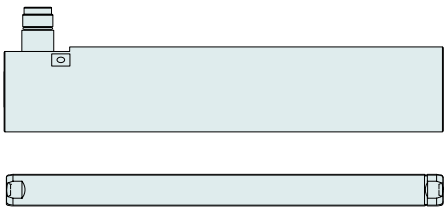

Item	Description	Item-No.
PS01-48x240F-SSC-C	Stator Stainless Steel IP69K	0150-1267
PS01-48x240F-SSC-C-FC	Stator stainless steel IP69K, FC	0150-1268
PL01-27x1400/1320	Slider 'High Clearance'	0150-1588

Linear Guides H01-SSC



HM01-48x240/210-SSC	**Linear module SSC 48x240 with 210 mm Stroke**			
H-Guide	H01-48x401/210-SSC	H-Guide for PS01-48x240F-HP-SSC, Stroke max.210 mm	0150-5280
Stator	PS01-48x240F-SSC-C	Stator Stainless Steel IP69K	0150-1267
	PS01-48x240F-SSC-C-FC	Stator stainless steel IP69K, FC	0150-1268
Slider	PL01-27x620/540	Slider 'High Clearance'	0150-1470
HM01-48x240/300-SSC	**Linear module SSC 48x240 with 300 mm Stroke**			
H-Guide	H01-48x401/300-SSC	H-Guide for PS01-48x240F-HP-SSC, Stroke max.300 mm	0150-5281
Stator	PS01-48x240F-SSC-C	Stator Stainless Steel IP69K	0150-1267
	PS01-48x240F-SSC-C-FC	Stator stainless steel IP69K, FC	0150-1268
Slider	PL01-27x710/630	Slider 'High Clearance'	0150-1471
HM01-48x240/390-SSC	**Linear module SSC 48x240 with 390 mm Stroke**			
H-Guide	H01-48x401/390-SSC	H-Guide for PS01-48x240F-HP-SSC, Stroke max.390 mm	0150-5282
Stator	PS01-48x240F-SSC-C	Stator Stainless Steel IP69K	0150-1267
	PS01-48x240F-SSC-C-FC	Stator stainless steel IP69K, FC	0150-1268
Slider	PL01-27x800/720	Slider 'High Clearance'	0150-1472
HM01-48x240/510-SSC	**Linear module SSC 48x240 with 510 mm Stroke**			
H-Guide	H01-48x401/510-SSC	H-Guide for PS01-48x240F-HP-SSC, Stroke max.510 mm	0150-5283
Stator	PS01-48x240F-SSC-C	Stator Stainless Steel IP69K	0150-1267
	PS01-48x240F-SSC-C-FC	Stator stainless steel IP69K, FC	0150-1268
Slider	PL01-27x920/840	Slider 'High Clearance'	0150-1447

FIND MORE PRODUCT DETAILS IN THE CHAPTER "LINEAR GUIDES".

Motor Cable

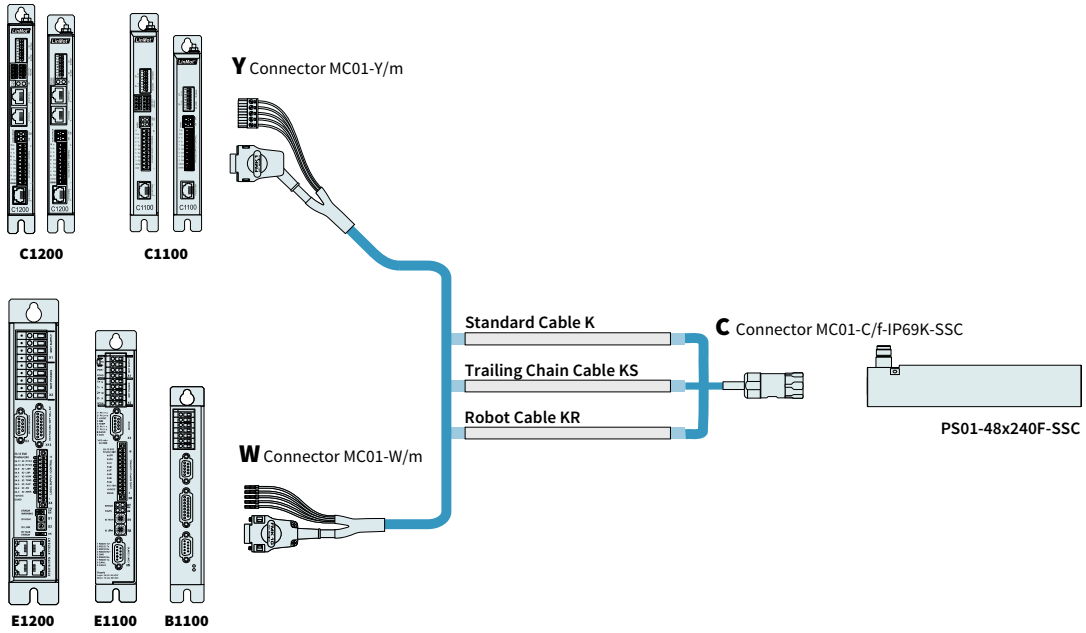

ORDERING INFORMATION

STANDARD CABLE		
Item	**Description**	**Item-No.**
K15-W/C-SSC	Motor Cable W/C-SSC, Custom length	0150-3539
K15-Y-Fe/C-SSC-	Motor Cable Y-Fe/C-SSC, Custom length	0150-3630

TRAILING CHAIN CABLE		
Item	**Description**	**Item-No.**
KS10-W/C-SSC-2	Trailing Chain Cable W/C-SSC, 2 m	0150-2675
KS10-W/C-SSC-4	Trailing Chain Cable W/C-SSC, 4 m	0150-2676
KS10-W/C-SSC-6	Trailing Chain Cable W/C-SSC, 6 m	0150-2677
KS10-W/C-SSC-8	Trailing Chain Cable W/C-SSC, 8 m	0150-2678
KS10-W/C-SSC-	Trailing Chain Cable W/C-SSC, Custom length	0150-3358
KS10-Y/C-SSC-2	Trailing Chain Cable Y/C-SSC, 2 m	0150-2679
KS10-Y/C-SSC-4	Trailing Chain Cable Y/C-SSC, 4 m	0150-2680
KS10-Y/C-SSC-6	Trailing Chain Cable Y/C-SSC, 6 m	0150-2681
KS10-Y/C-SSC-8	Trailing Chain Cable Y/C-SSC, 8 m	0150-2682
KS10-Y-Fe/C-SSC-	Trailing Chain Cable Y/C-SSC, Custom length	0150-3574

ROBOT CABLE		
Item	**Description**	**Item-No.**
KR10-W/C-SSC-	Robot Cable KR05-W/C-SSC-, Custom length	0150-3536

CONNECTOR & CABLE (INDIVIDUAL)		
Item	**Description**	**Item-No.**
MC01-W/m	Motor Connector W/m	0150-3140
MC01-Y-Fe/m	Motor Connector Y-Fe/m	0150-3289
MC01-C/f-IP69K-SSC	Motor Connector C/f, IP69K, SSC	0150-3306
K15-04/05	Motor Cable per m	0150-1978
KS10-04/05	Trailing Chain Cable per m	0150-1977
KR10-04/05	Robot Cable per m	0150-1830

SLIDER MOUNTING





Item	Description	Item-No.
PLF01-28-SS	Fixed Bearing Set for 27 mm and 28 mm Slider, Stainless steel	0150-3297
PLL01-27	Floating support for PL01-27 sliders	0150-3294

FIND MORE PRODUCT DETAILS IN THE CHAPTER "ACCESSORIES".

BEARING KITS



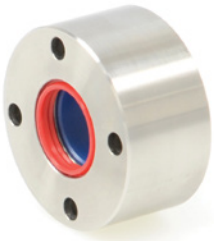

Item	Description	Item-No.
PB02-48x25-P-WD	Bearing for PS01-48x...-SSC (Plastic)	0150-3271
PB01-48x25-P-SSC	Bearing for PS01-48x...-SSC, stainless steel	0150-3281

FIND MORE PRODUCT DETAILS IN THE CHAPTER "ACCESSORIES".

EXTERNAL POSITION SENSORS



Item	Description	Item-No.
MS01-1/D	Linear Encoder 1µm, A/B (for incremental strip)	0150-1840
MB01-1000	Magnetic incremental strip for MS01-1/D, per cm	0150-1963
KS025-D/D-Encoder	Special cable KS025-D/D-Encoder- (Length in m)	0150-3166
KS025-D/D15-Encoder	Special cable KS025-D15/D-Encoder- (Length in m)	0150-3168

FIND MORE PRODUCT DETAILS IN THE CHAPTER "ACCESSORIES".



Item	Description	Item-No.
MS01-1/D-SSI	Linear Encoder 1µm, A/B (for absolute strip)	0150-2095
MB01-1000-ABS	Magnetic absolute strip for MS01-1/D-SSI (per cm)	0150-2096
EC01-ABS/ENC-12-S	MS01-1/D-SSI Encoder connector straigth	0150-3616
KSS01-12-D15/ABS-ENC	For MS01-1/D-SSI on C1100/C1200/C1400/E1200/E1400 Drives	0150-3652

FIND MORE PRODUCT DETAILS IN THE CHAPTER "ACCESSORIES".

LINEAR MOTORS P01-48x360F-SSC



- Stainless steel housing EN 1.4404 / AISI / SAE 316L
- Hygienic design
- Welded connections, no gaskets
- Completely encapsulated
- Protection class IP69K
- Optional integrated water cooling
- For use in the food or in the pharmaceutical sector

5

LINEAR MOTORS P01-48x360F-SSC

Technical Data ____ **659**

Motor Specifications

P01-48x360F/80-PB25-SSC **662**

P01-48x360F/170-PB25-SSC **663**

P01-48x360F/260-PB25-SSC **664**

P01-48x360F/380-PB25-SSC **665**

P01-48x360F/470-PB25-SSC **666**

P01-48x360F/680-PB25-SSC **667**

P01-48x360F/860-PB25-SSC **668**

Accessories ____ **669**



MOTOR FAMILY P01-48x360F-SSC

Technical Data				
Stroke				
Max. Stroke	mm	(in)	860	(33.9)
Force				
Max. Force @ 48VDC	N	(lbf)	721	(162)
Max. Force @ 72VDC	N	(lbf)	721	(162)
Max. Cont. Force [Passive cooling/ Fan / Fluid]	N	(lbf)	130 / - / 350	(29 / - / 80)
Max. Border Force relative	%		≤ 100	
Force Constant	N/A_{pk}	(lbf/A_{pk})	27.7	(6.24)
Velocity				
Max. Velocity @ 48VDC	m/s	(in/s)	1.6	(62.9)
Max. Velocity @ 72VDC	m/s	(in/s)	2.3	(93.9)
Position Detection				
Position Resolution	mm	(in)	0.007	(0.0003)
Repeatability	mm	(in)	±0.05	(±0.002)
Position Resolution with ES	mm	(in)	0.001	(0.00004)
Repeatability with ES	mm	(in)	±0.01	(±0.0004)
Linearity with ES	mm	(in)	±0.01	(±0.0004)
Electrical Data				
Max. Current @ 48VDC	A_{pk}		25.9	
Max. Current @ 72VDC	A_{pk}		25.9	
Max. Cont. Current [Passive cooling /Fan / Fluid]	A_{pk}		4.6 / - / 13	
Terminal Resistance 25 °C / 120 °C	Ohm		1.4 / 1.9	
Terminal Inductivity	mH		1.6	
Magnetic Period	mm	(in)	60	(2.35)
Thermal Data				
Max. Winding Temperature (Sensor)	°C		90	
Thermal Resistance [Passive cooling / Fan / Fluid]	°K/W		1.3 / - / 0.17	
Thermal Time Constant [Passive cooling / Fan / Fluid]	s		1900 / - / 240	
Mechanical Data				
Stator Diameter	mm	(in)	60	(2.4)
Stator Length [Connector type / Cable type]	mm	(in)	515	(20)
Stator Mass	g	(lb)	5560	(12.23)
Slider Diameter	mm	(in)	27	(1.1)
Slider Length	mm	(in)	500 - 1400	(20 - 55)
Slider Mass	g	(lb)	2010 - 5910	(4.42 - 13)
IP Code			IP 69k	

STATOR

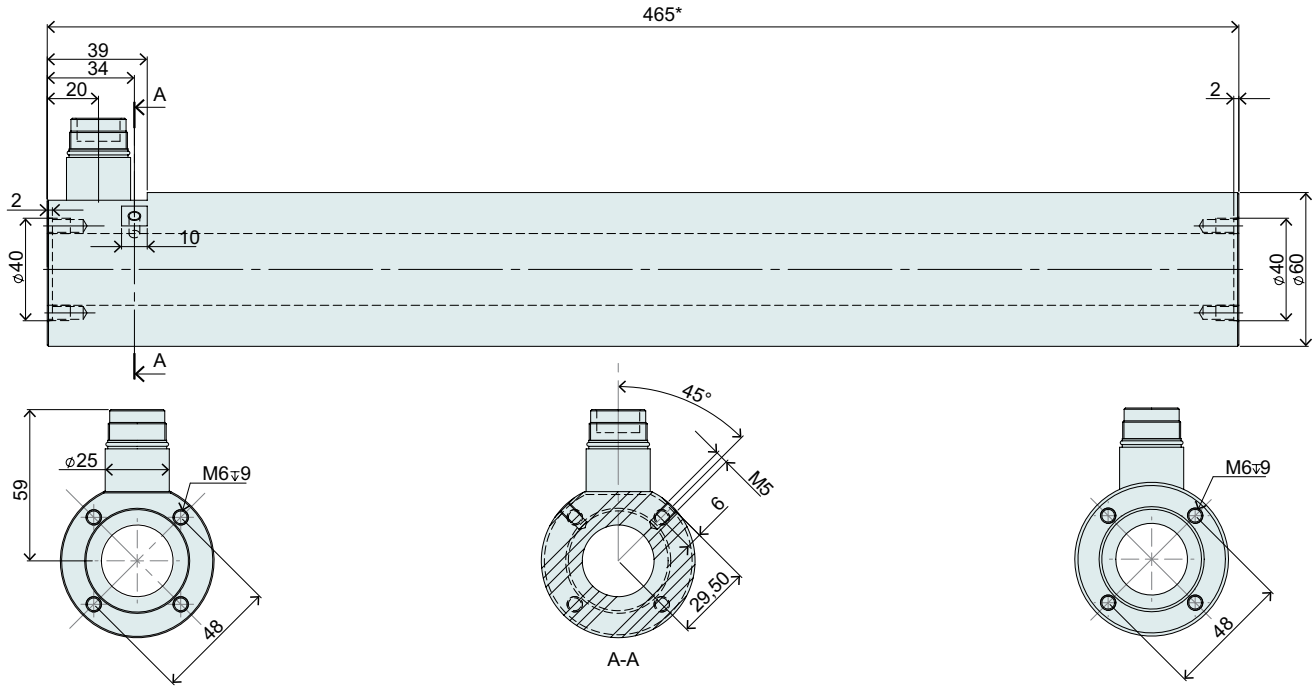

* Length without bearing

Item	Description	Item-No.
PS01-48x360F-SSC-C	Stator Stainless Steel IP69K	0150-1270
PS01-48x360F-SSC-C-FC	Stator stainless steel IP69K, FC	0150-1271

CONNECTOR

Motor Connector Wiring	PS01-48x360F-SSC-C PS01-48x360F-SSC-C-FC C-Connector	Wire Color Motor Cable
Ph 1+	A	red
Ph 1-	B	pink
Ph 2+	C	blue
Ph 2-	D	grey
+5VDC	E	white
GND	F	inner Shield
Sinus	G	yellow
Cosinus	H	green
Temp.	L	black
Shield	Case	outer Shield

C-Connector

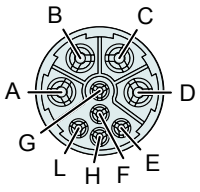

View: Motor connector, plug side

SLIDER

Slider High Clearance

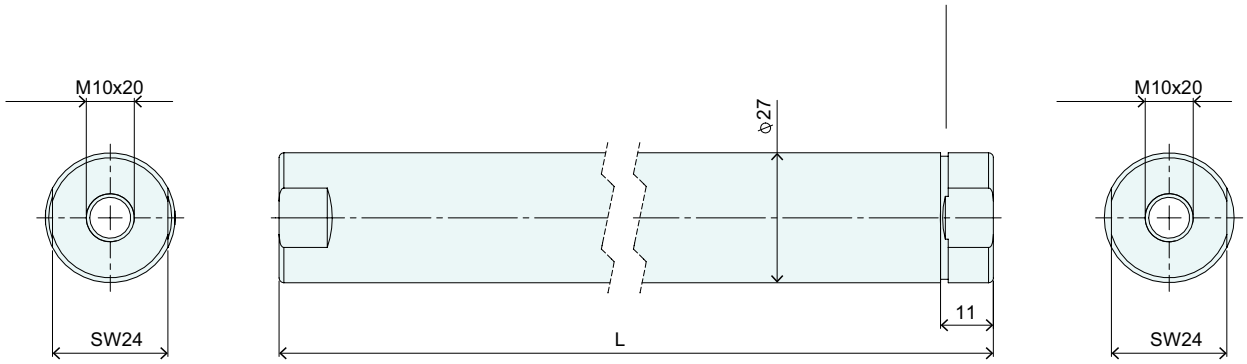

Slider High Clearance			
Item	Description	Max. Stroke [mm]	Item-No.
PL01-27x620/540	Slider 'High Clearance'	80	0150-1470
PL01-27x710/630	Slider 'High Clearance'	170	0150-1471
PL01-27x800/720	Slider 'High Clearance'	260	0150-1472
PL01-27x920/840	Slider 'High Clearance'	380	0150-1447
PL01-27x1010/930	Slider 'High Clearance'	470	0150-1473
PL01-27x1220/1140	Slider 'High Clearance'	680	0150-1587
PL01-27x1400/1320	Slider 'High Clearance'	860	0150-1588

P01-48x360F/80-PB25-SSC

Max. Stroke: 80 mm
Peak Force: 721 N

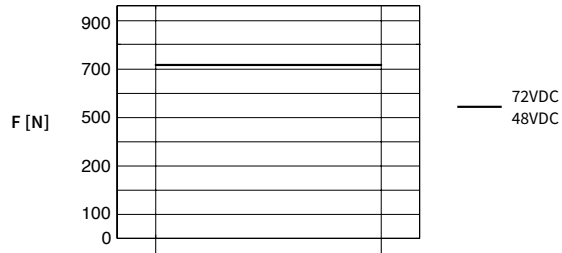

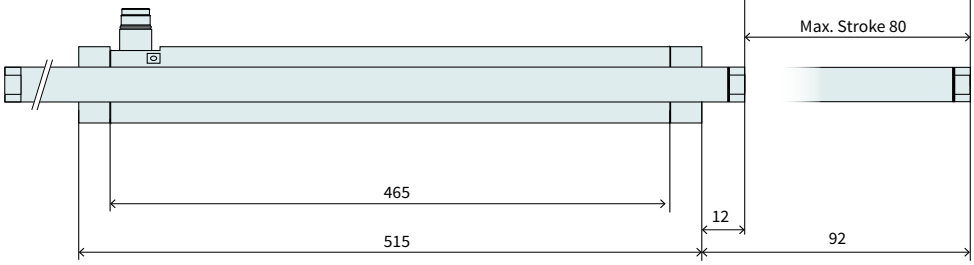

Dimensions in mm

Technical Data P01-48x360F/80-PB25-SSC				
Stroke				
Max. Stroke	mm	(in)	80	(3.14)
Force				
Max. Force @ 48VDC	N	(lbf)	721	(162)
Max. Force @ 72VDC	N	(lbf)	721	(162)
Max. Cont. Force [Passive cooling/ Fan / Fluid]	N	(lbf)	130 / - / 350	(29 / - / 80)
Max. Border Force relative	%		100	
Force Constant	N/A_{pk}	(lbf/A_{pk})	27.7	(6.24)
Velocity				
Max. Velocity @ 48VDC	m/s	(in/s)	1.6	(62.9)
Max. Velocity @ 72VDC	m/s	(in/s)	2.3	(93.9)
Position Detection				
Repeatability	mm	(in)	±0.05	(±0.002)
Linearity	%		± 1.05	
Electrical Data				
Max. Current @ 48VDC	A_{pk}		25.9	
Max. Current @ 72VDC	A_{pk}		25.9	
Max. Cont. Current [Passive cooling /Fan / Fluid]	A_{pk}		4.6 / - / 13	
Thermal Data				
Max. Winding Temperature (Sensor)	°C		90	
Thermal Resistance [Passive cooling / Fan / Fluid]	°K/W		1.3 / - / 0.17	
Thermal Time Constant [Passive cooling / Fan / Fluid]	s		1900 / - / 240	
Mechanical Data				
Slider Length	mm	(in)	620	(24)
Slider Mass	g	(lb)	2530	(5.57)

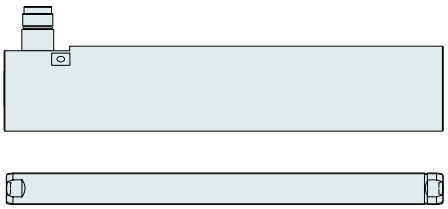

Item	Description	Item-No.
PS01-48x360F-SSC-C	Stator Stainless Steel IP69K	0150-1270
PS01-48x360F-SSC-C-FC	Stator stainless steel IP69K, FC	0150-1271
PL01-27x620/540	Slider 'High Clearance'	0150-1470

P01-48x360F/170-PB25-SSC

Max. Stroke: 170 mm
Peak Force: 721 N

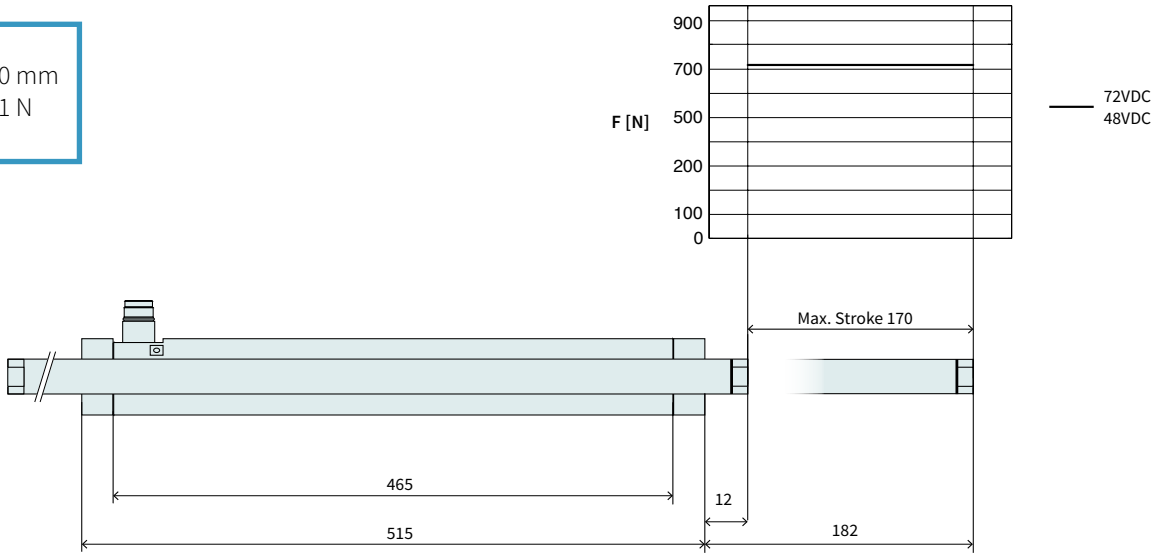

Dimensions in mm

Technical Data P01-48x360F/170-PB25-SSC				
Stroke				
Max. Stroke	mm	(in)	170	(6.69)
Force				
Max. Force @ 48VDC	N	(lbf)	721	(162)
Max. Force @ 72VDC	N	(lbf)	721	(162)
Max. Cont. Force [Passive cooling/ Fan / Fluid]	N	(lbf)	130 / - / 350	(29 / - / 80)
Max. Border Force relative	%		100	
Force Constant	N/A_{pk}	(lbf/A_{pk})	27.7	(6.24)
Velocity				
Max. Velocity @ 48VDC	m/s	(in/s)	1.6	(62.9)
Max. Velocity @ 72VDC	m/s	(in/s)	2.3	(93.9)
Position Detection				
Repeatability	mm	(in)	±0.05	(±0.002)
Linearity	%		± 0.55	
Electrical Data				
Max. Current @ 48VDC	A_{pk}		25.9	
Max. Current @ 72VDC	A_{pk}		25.9	
Max. Cont. Current [Passive cooling /Fan / Fluid]	A_{pk}		4.6 / - / 13	
Thermal Data				
Max. Winding Temperature (Sensor)	°C		90	
Thermal Resistance [Passive cooling / Fan / Fluid]	°K/W		1.3 / - / 0.17	
Thermal Time Constant [Passive cooling / Fan / Fluid]	s		1900 / - / 240	
Mechanical Data				
Slider Length	mm	(in)	710	(28)
Slider Mass	g	(lb)	2920	(6.42)

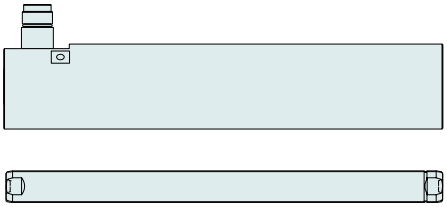

Item	Description	Item-No.
PS01-48x360F-SSC-C	Stator Stainless Steel IP69K	0150-1270
PS01-48x360F-SSC-C-FC	Stator stainless steel IP69K, FC	0150-1271
PL01-27x710/630	Slider 'High Clearance'	0150-1471

P01-48x360F/260-PB25-SSC

Max. Stroke: 260 mm
Peak Force: 721 N

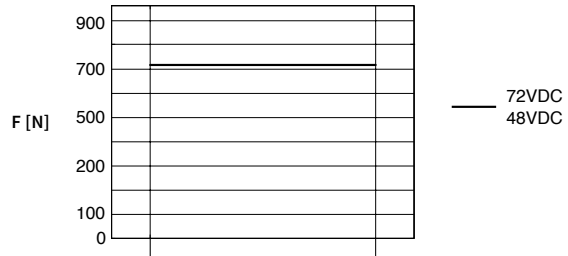

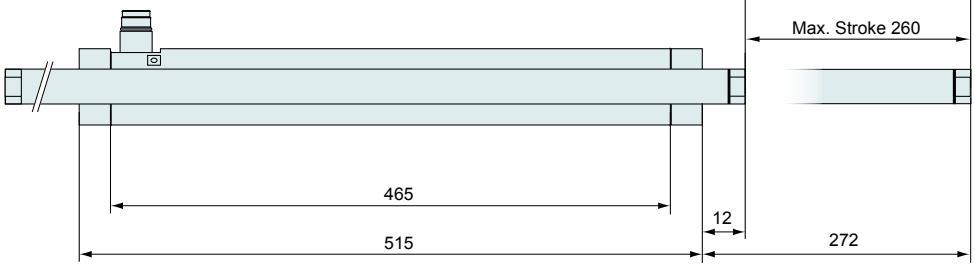

Dimensions in mm

Technical Data P01-48x360F/260-PB25-SSC				
Stroke				
Max. Stroke	mm	(in)	260	(10.19)
Force				
Max. Force @ 48VDC	N	(lbf)	721	(162)
Max. Force @ 72VDC	N	(lbf)	721	(162)
Max. Cont. Force [Passive cooling/ Fan / Fluid]	N	(lbf)	130 / - / 350	(29 / - / 80)
Max. Border Force relative	%		100	
Force Constant	N/A_{pk}	(lbf/A_{pk})	27.7	(6.24)
Velocity				
Max. Velocity @ 48VDC	m/s	(in/s)	1.6	(62.9)
Max. Velocity @ 72VDC	m/s	(in/s)	2.3	(93.9)
Position Detection				
Repeatability	mm	(in)	±0.05	(±0.002)
Linearity	%		± 0.4	
Electrical Data				
Max. Current @ 48VDC	A_{pk}		25.9	
Max. Current @ 72VDC	A_{pk}		25.9	
Max. Cont. Current [Passive cooling /Fan / Fluid]	A_{pk}		4.6 / - / 13	
Thermal Data				
Max. Winding Temperature (Sensor)	°C		90	
Thermal Resistance [Passive cooling / Fan / Fluid]	°K/W		1.3 / - / 0.17	
Thermal Time Constant [Passive cooling / Fan / Fluid]	s		1900 / - / 240	
Mechanical Data				
Slider Length	mm	(in)	800	(31)
Slider Mass	g	(lb)	3310	(7.28)

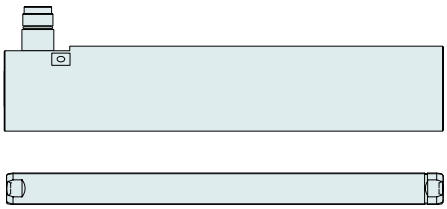

Item	Description	Item-No.
PS01-48x360F-SSC-C	Stator Stainless Steel IP69K	0150-1270
PS01-48x360F-SSC-C-FC	Stator stainless steel IP69K, FC	0150-1271
PL01-27x800/720	Slider 'High Clearance'	0150-1472

P01-48x360F/380-PB25-SSC

Max. Stroke: 380 mm
Peak Force: 721 N

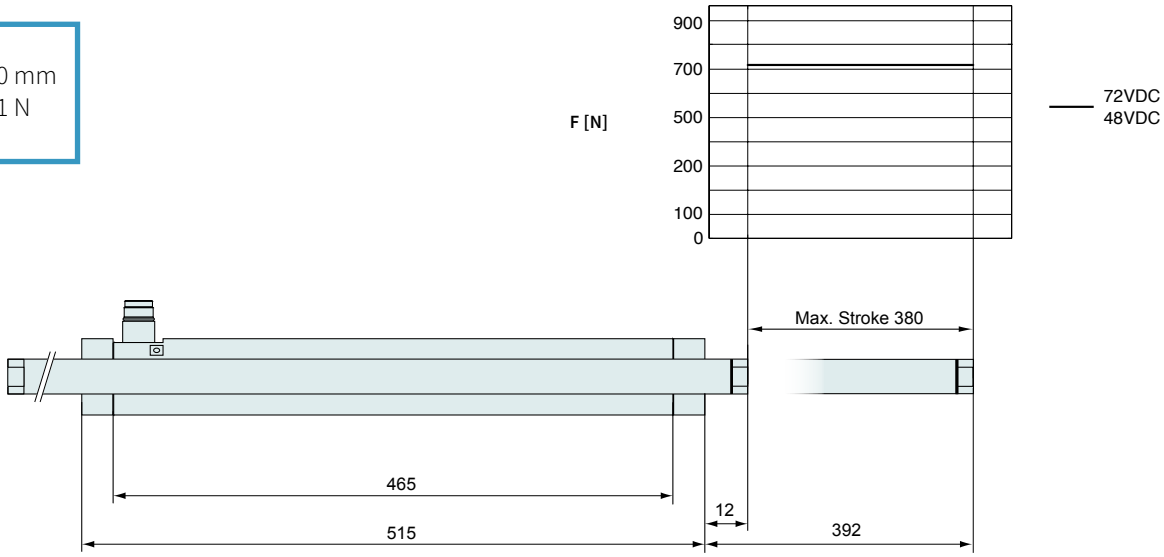

Dimensions in mm

Technical Data P01-48x360F/380-PB25-SSC				
Stroke				
Max. Stroke	mm	(in)	380	(14.99)
Force				
Max. Force @ 48VDC	N	(lbf)	721	(162)
Max. Force @ 72VDC	N	(lbf)	721	(162)
Max. Cont. Force [Passive cooling/ Fan / Fluid]	N	(lbf)	130 / - / 350	(29 / - / 80)
Max. Border Force relative	%		100	
Force Constant	N/A_{pk}	(lbf/A_{pk})	27.7	(6.24)
Velocity				
Max. Velocity @ 48VDC	m/s	(in/s)	1.6	(62.9)
Max. Velocity @ 72VDC	m/s	(in/s)	2.3	(93.9)
Position Detection				
Repeatability	mm	(in)	±0.05	(±0.002)
Linearity	%		± 0.3	
Electrical Data				
Max. Current @ 48VDC	A_{pk}		25.9	
Max. Current @ 72VDC	A_{pk}		25.9	
Max. Cont. Current [Passive cooling /Fan / Fluid]	A_{pk}		4.6 / - / 13	
Thermal Data				
Max. Winding Temperature (Sensor)	°C		90	
Thermal Resistance [Passive cooling / Fan / Fluid]	°K/W		1.3 / - / 0.17	
Thermal Time Constant [Passive cooling / Fan / Fluid]	s		1900 / - / 240	
Mechanical Data				
Slider Length	mm	(in)	920	(36)
Slider Mass	g	(lb)	3830	(8.43)

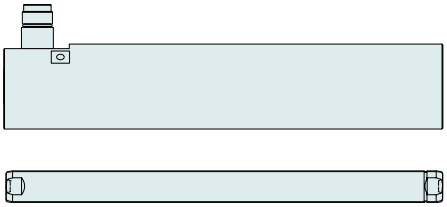

Item	Description	Item-No.
PS01-48x360F-SSC-C	Stator Stainless Steel IP69K	0150-1270
PS01-48x360F-SSC-C-FC	Stator stainless steel IP69K, FC	0150-1271
PL01-27x920/840	Slider 'High Clearance'	0150-1447

P01-48x360F/470-PB25-SSC

Max. Stroke: 470 mm
Peak Force: 721 N

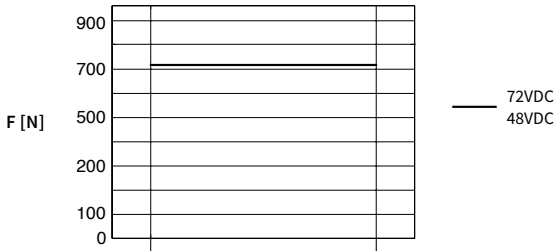

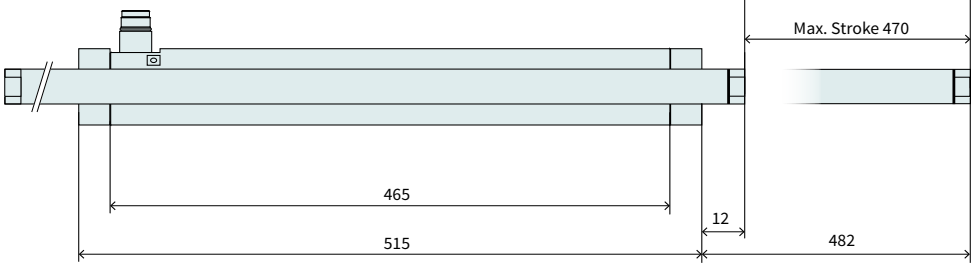

Dimensions in mm

Technische Daten P01-48x360F/470-PB25-SSC				
Stroke				
Max. Stroke	mm	(in)	470	(18.49)
Force				
Max. Force @ 48VDC	N	(lbf)	721	(162)
Max. Force @ 72VDC	N	(lbf)	721	(162)
Max. Cont. Force [Passive cooling/ Fan / Fluid]	N	(lbf)	130 / - / 350	(29 / - / 80)
Max. Border Force relative	%		100	
Force Constant	N/A_{pk}	(lbf/A_{pk})	27.7	(6.24)
Velocity				
Max. Velocity @ 48VDC	m/s	(in/s)	1.6	(62.9)
Max. Velocity @ 72VDC	m/s	(in/s)	2.3	(93.9)
Position Detection				
Repeatability	mm	(in)	±0.05	(±0.002)
Linearity	%		± 0.25	
Electrical Data				
Max. Current @ 48VDC	A_{pk}		25.9	
Max. Current @ 72VDC	A_{pk}		25.9	
Max. Cont. Current [Passive cooling /Fan / Fluid]	A_{pk}		4.6 / - / 13	
Thermal Data				
Max. Winding Temperature (Sensor)	°C		90	
Thermal Resistance [Passive cooling / Fan / Fluid]	°K/W		1.3 / - / 0.17	
Thermal Time Constant [Passive cooling / Fan / Fluid]	s		1900 / - / 240	
Mechanical Data				
Slider Length	mm	(in)	1010	(40)
Slider Mass	g	(lb)	4220	(9.28)

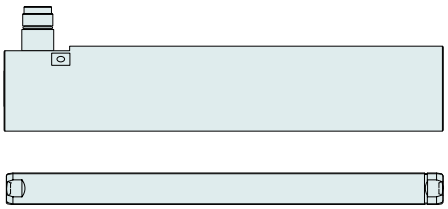

Item	Description	Item-No.
PS01-48x360F-SSC-C	Stator Stainless Steel IP69K	0150-1270
PS01-48x360F-SSC-C-FC	Stator stainless steel IP69K, FC	0150-1271
PL01-27x1010/930	Slider 'High Clearance'	0150-1473

P01-48x360F/680-PB25-SSC

Max. Stroke: 680 mm
Peak Force: 721 N

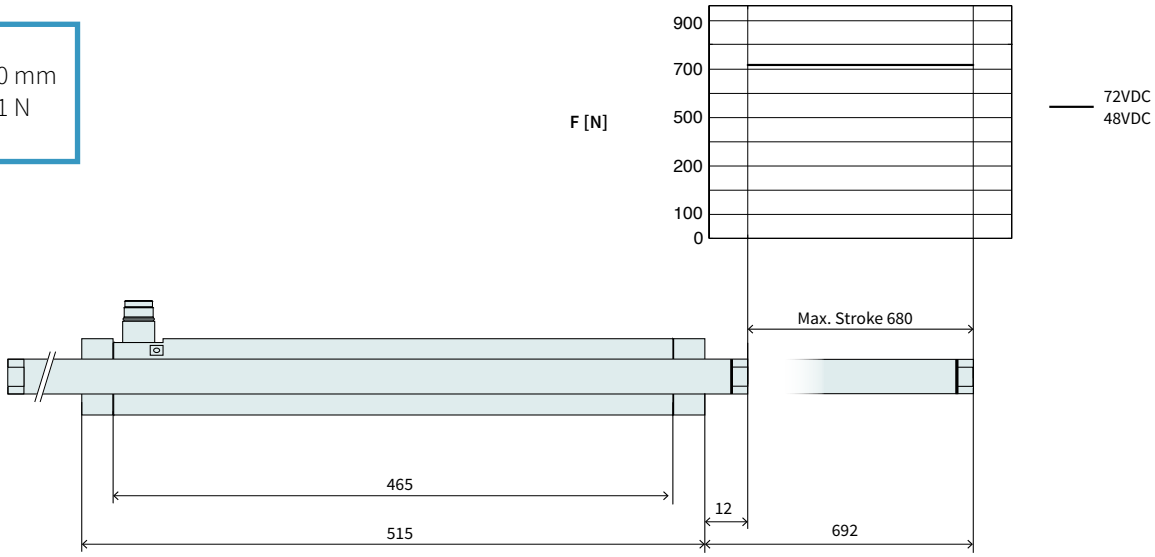

Dimensions in mm

Technical Data P01-48x360F/680-PB25-SSC				
Stroke				
Max. Stroke	mm	(in)	680	(26.8)
Force				
Max. Force @ 48VDC	N	(lbf)	721	(162)
Max. Force @ 72VDC	N	(lbf)	721	(162)
Max. Cont. Force [Passive cooling/ Fan / Fluid]	N	(lbf)	130 / - / 350	(29 / - / 80)
Max. Border Force relative	%		100	
Force Constant	N/A_{pk}	(lbf/A_{pk})	27.7	(6.24)
Velocity				
Max. Velocity @ 48VDC	m/s	(in/s)	1.6	(62.9)
Max. Velocity @ 72VDC	m/s	(in/s)	2.3	(93.9)
Position Detection				
Repeatability	mm	(in)	±0.05	(±0.002)
Linearity	%		± 0.2	
Electrical Data				
Max. Current @ 48VDC	A_{pk}		25.9	
Max. Current @ 72VDC	A_{pk}		25.9	
Max. Cont. Current [Passive cooling /Fan / Fluid]	A_{pk}		4.6 / - / 13	
Thermal Data				
Max. Winding Temperature (Sensor)	°C		90	
Thermal Resistance [Passive cooling / Fan / Fluid]	°K/W		1.3 / - / 0.17	
Thermal Time Constant [Passive cooling / Fan / Fluid]	s		1900 / - / 240	
Mechanical Data				
Slider Length	mm	(in)	1220	(48)
Slider Mass	g	(lb)	5130	(11.29)

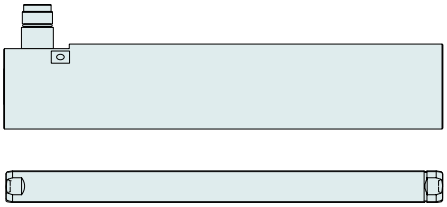

Item	Description	Item-No.
PS01-48x360F-SSC-C	Stator Stainless Steel IP69K	0150-1270
PS01-48x360F-SSC-C-FC	Stator stainless steel IP69K, FC	0150-1271
PL01-27x1220/1140	Slider 'High Clearance'	0150-1587

P01-48x360F/860-PB25-SSC

Max. Stroke: 860 mm
Peak Force: 721 N

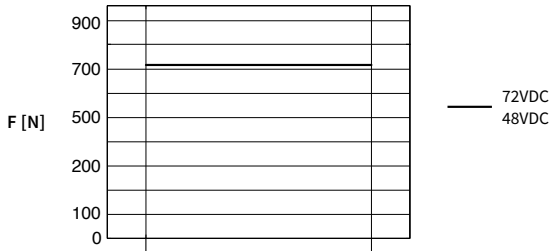

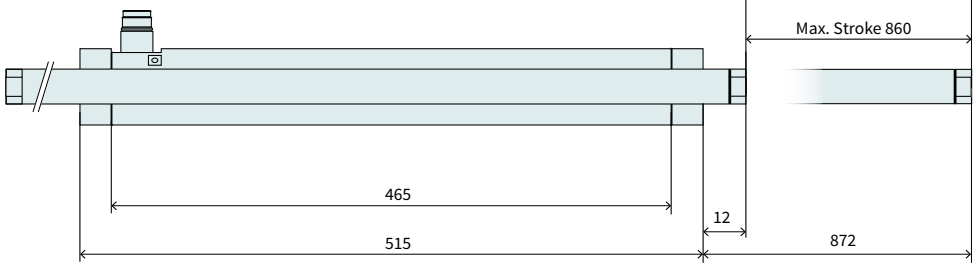

Dimensions in mm

Technical Data P01-48x360F/860-PB25-SSC				
Stroke				
Max. Stroke	mm	(in)	860	(33.89)
Force				
Max. Force @ 48VDC	N	(lbf)	721	(162)
Max. Force @ 72VDC	N	(lbf)	721	(162)
Max. Cont. Force [Passive cooling/ Fan / Fluid]	N	(lbf)	130 / - / 350	(29 / - / 80)
Max. Border Force relative	%		100	
Force Constant	N/A_{pk}	(lbf/A_{pk})	27.7	(6.24)
Velocity				
Max. Velocity @ 48VDC	m/s	(in/s)	1.6	(62.9)
Max. Velocity @ 72VDC	m/s	(in/s)	2.3	(93.9)
Position Detection				
Repeatability	mm	(in)	±0.05	(±0.002)
Linearity	%		± 0.2	
Electrical Data				
Max. Current @ 48VDC	A_{pk}		25.9	
Max. Current @ 72VDC	A_{pk}		25.9	
Max. Cont. Current [Passive cooling /Fan / Fluid]	A_{pk}		4.6 / - / 13	
Thermal Data				
Max. Winding Temperature (Sensor)	°C		90	
Thermal Resistance [Passive cooling / Fan / Fluid]	°K/W		1.3 / - / 0.17	
Thermal Time Constant [Passive cooling / Fan / Fluid]	s		1900 / - / 240	
Mechanical Data				
Slider Length	mm	(in)	1400	(55)
Slider Mass	g	(lb)	5910	(13)

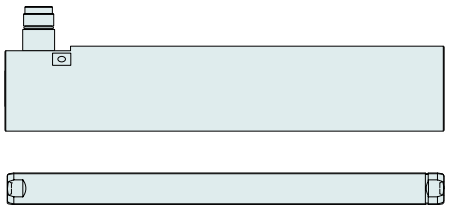

Item	Description	Item-No.
PS01-48x360F-SSC-C	Stator Stainless Steel IP69K	0150-1270
PS01-48x360F-SSC-C-FC	Stator stainless steel IP69K, FC	0150-1271
PL01-27x1400/1320	Slider 'High Clearance'	0150-1588

Motor Cable

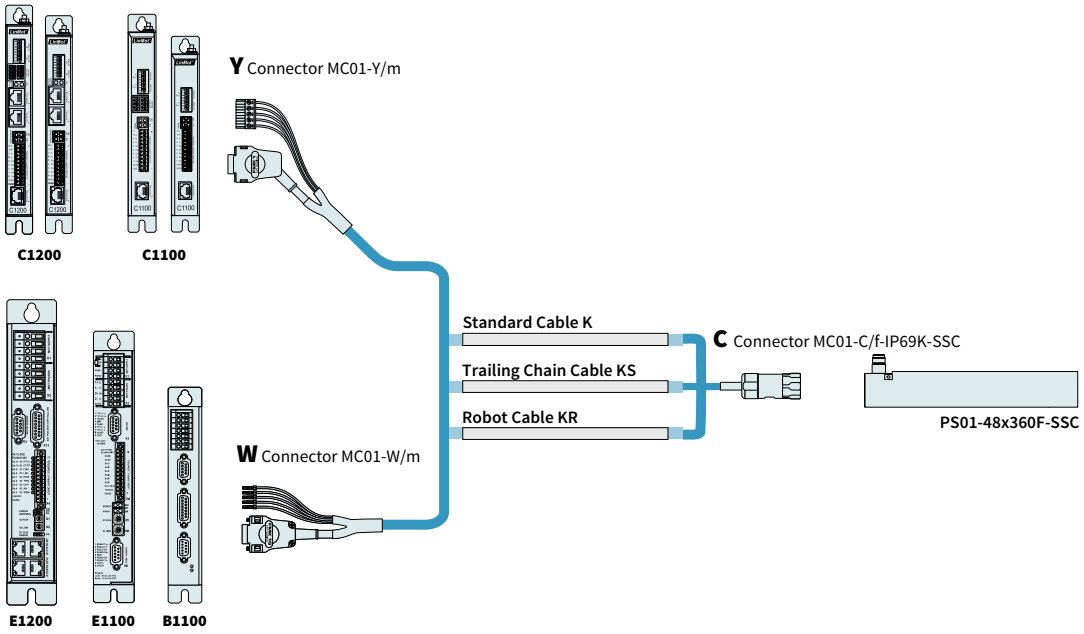

ORDERING INFORMATION

STANDARD CABLE		
Item	**Description**	**Item-No.**
K15-W/C-SSC	Motor Cable W/C-SSC, Custom length	0150-3539
K15-Y-Fe/C-SSC-	Motor Cable Y-Fe/C-SSC, Custom length	0150-3630

TRAILING CHAIN CABLE		
Item	**Description**	**Item-No.**
KS10-W/C-SSC-2	Trailing Chain Cable W/C-SSC, 2 m	0150-2675
KS10-W/C-SSC-4	Trailing Chain Cable W/C-SSC, 4 m	0150-2676
KS10-W/C-SSC-6	Trailing Chain Cable W/C-SSC, 6 m	0150-2677
KS10-W/C-SSC-8	Trailing Chain Cable W/C-SSC, 8 m	0150-2678
KS10-W/C-SSC-	Trailing Chain Cable W/C-SSC, Custom length	0150-3358
KS10-Y/C-SSC-2	Trailing Chain Cable Y/C-SSC, 2 m	0150-2679
KS10-Y/C-SSC-4	Trailing Chain Cable Y/C-SSC, 4 m	0150-2680
KS10-Y/C-SSC-6	Trailing Chain Cable Y/C-SSC, 6 m	0150-2681
KS10-Y/C-SSC-8	Trailing Chain Cable Y/C-SSC, 8 m	0150-2682
KS10-Y-Fe/C-SSC-	Trailing Chain Cable Y/C-SSC, Custom length	0150-3574

ROBOT CABLE		
Item	**Description**	**Item-No.**
KR10-W/C-SSC-	Robot Cable KR05-W/C-SSC-, Custom length	0150-3536

CONNECTOR & CABLE (INDIVIDUAL)		
Item	**Description**	**Item-No.**
MC01-W/m	Motor Connector W/m	0150-3140
MC01-Y-Fe/m	Motor Connector Y-Fe/m	0150-3289
MC01-C/f-IP69K-SSC	Motor Connector C/f, IP69K, SSC	0150-3306
K15-04/05	Motor Cable per m	0150-1978
KS10-04/05	Trailing Chain Cable per m	0150-1977
KR10-04/05	Robot Cable per m	0150-1830

SLIDER MOUNTING





Item	Description	Item-No.
PLF01-28-SS	Fixed Bearing Set for 27 mm and 28 mm Slider, Stainless steel	0150-3297
PLL01-27	Floating support for PL01-27 sliders	0150-3294

FIND MORE PRODUCT DETAILS IN THE CHAPTER "ACCESSORIES".

BEARING KITS



Item	Description	Item-No.
PB01-48x25-80-P-SSC	Bearing for PS01-48x360-SSC, (stainless steel)	0150-3413

FIND MORE PRODUCT DETAILS IN THE CHAPTER "ACCESSORIES".

EXTERNAL POSITION SENSORS



Item	Description	Item-No.
MS01-1/D	Linear Encoder 1µm, A/B (for incremental strip)	0150-1840
MB01-1000	Magnetic incremental strip for MS01-1/D, per cm	0150-1963
KS025-D/D-Encoder	Special cable KS025-D/D-Encoder- (Length in m)	0150-3166
KS025-D/D15-Encoder	Special cable KS025-D15/D-Encoder- (Length in m)	0150-3168

FIND MORE PRODUCT DETAILS IN THE CHAPTER "ACCESSORIES".



Item	Description	Item-No.
MS01-1/D-SSI	Linear Encoder 1µm, A/B (for absolute strip)	0150-2095
MB01-1000-ABS	Magnetic absolute strip for MS01-1/D-SSI (per cm)	0150-2096
EC01-ABS/ENC-12-S	MS01-1/D-SSI Encoder connector straigth	0150-3616
KSS01-12-D15/ABS-ENC	For MS01-1/D-SSI on C1100/C1200/C1400/E1200/E1400 Drives	0150-3652

FIND MORE PRODUCT DETAILS IN THE CHAPTER "ACCESSORIES".

LINEAR MOTORS ATEX

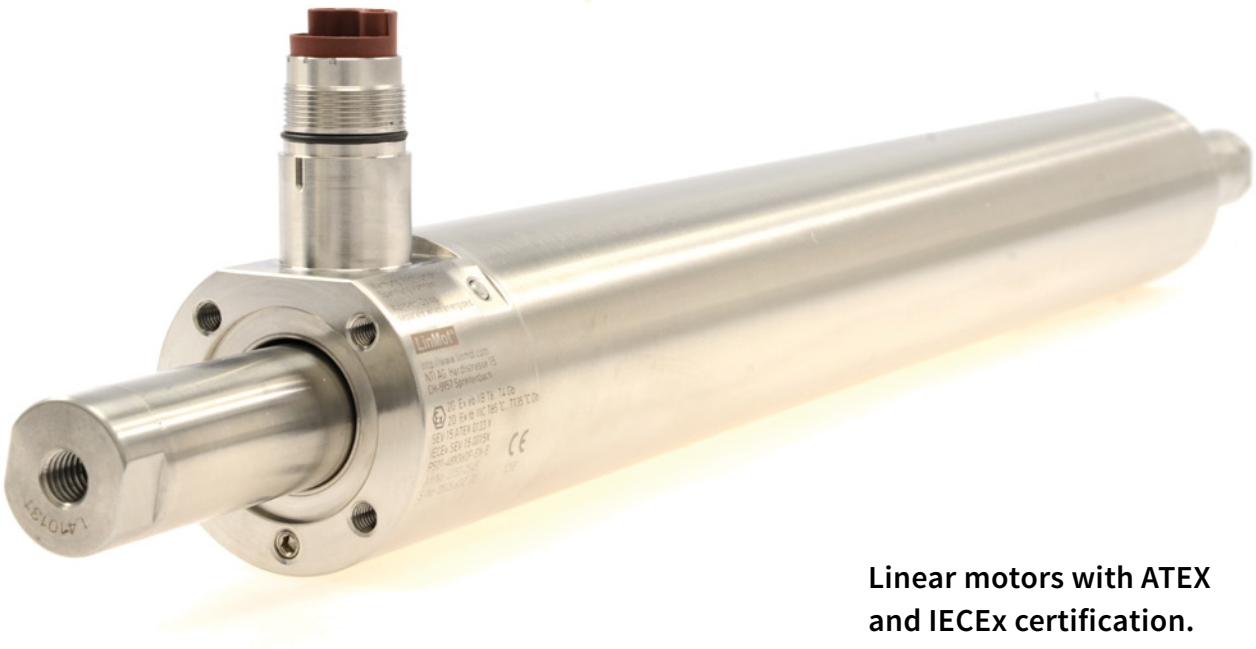

Linear motors with ATEX and IECEx certification.

Product Description

Wherever explosive gases or vapors are mixed with air, or flammable dust can occur, drives with enhanced protective mechanisms are required.

For this purpose, LinMot series P01–48 linear motors have been developed and certified as EX protected motors in accordance with directive 94/9/EC. Device classifications 2G and 2D mean that the devices can be used in an explosive atmosphere consisting of gases, vapors, mist, or dust in zones 1/21 and 2/22.

The drives are thus optimally designed for use in printing machines, painting lines, plastic-processing machines, or in the chemical or pharmaceutical field.

The ATEX family of motors consists of two sizes for which a wide range of slider lengths is available. The stroke length ranges up to 980 mm, along which a peak force of 720 N can be achieved.



Safely protected in ATEX environments

The ATEX motors are completely encapsulated in stainless steel and do not require seals. All joint connections are welded. To completely seal off the motor, the windings and other internal components of the stator are potted in epoxy resin. This guarantees optimal protection of the motor and eliminates the risk of electrical arcing. The motors have been designed to be very compact and have no unnecessary edges, corners, holes, or threaded connections, so there is no place where explosive material could collect. This eliminates additional potential sources of ignition and the risk of non-uniform heating is greatly minimized. Even in environments with a low ignition temperature (> 85 °C), LinMot ATEX motors are permitted to be used.

ADDITIONAL TEMPERATURE MONITORING

In addition to sensors for monitoring the winding temperature in the stator of the ATEX motor, additional temperature sensors are installed under the motor housing.

This allows 2-channel temperature monitoring of the motor. If the motor should overheat due to an error, the drive feed is interrupted by the higher-level channel. The technical safety concept of the LinMot ATEX motors is such that no further certified elements are required in the explosion hazard zone other than the motor and the feed cable.

INTEGRATED WATER COOLING

LinMot's ATEX linear motors can optionally be supplied with integrated water cooling. The stator is enclosed by the cooling system along its entire length.

The heat losses generated in the motor are dissipated through the liquid cooling system. This increases the rated power of the motor several times over in comparison with the self-cooled version. Due to the lower surface temperature of the motor, it can also be used in an explosive atmosphere with a lower ignition temperature.

HIGH AND CONTROLLED DYNAMICS

Max. acceleration values over 400 m/s^2 and travel speeds over 3 m/s allow cyclical motion sequences of several Hertz.

For handling applications with sensitive products, such as transporting wafers in semiconductor production, very gentle, smooth motions with suitable accelerations can be obtained.

FREELY POSITIONABLE

LinMot linear motors can be freely positioned. With absolute or relative movement commands, they can move to any desired position in the stroke range. Since the LinMot linear drive is a closed-loop system, not only the end positions are monitored, but also deviations in position during travel. This allows, among other things, precise specification of travel speeds, acceleration and braking ramps, and travel through curved paths.

PROCESS STABILITY

Since not only the end position, but also speed and acceleration are controlled and monitored, motions that are programmed once are carried out the same way over the entire life of the machine.

MOTOR CONNECTOR

For the purpose of complete encapsulation, the plug is welded to the housing of the motor. The plug is made of stainless steel and is tightened with a coupling nut. At the same time the protection class IP 66/67 is fulfilled. To protect an outgoing spark, the motor plug and the cable plug are securely screwed together.

SYNCHRONIZATION

For synchronous machines, the linear motor can be synchronized to the main shaft. By replacing mechanical cam discs with LinMot linear motors, for example, great variations can be achieved, with format changeovers at the push of a button.

OVERLOAD PROTECTION

There are no mechanical components for force transfer that could be damaged in a crash or stall condition in a linear motor. Complex, expensive designs to protect gearboxes, gears, and shafts are thus eliminated. If the linear motor stalls, it acts like a pneumatic cylinder and tries to reach the target position with a defined force. The following error monitor in the drive can, however, immediately recognize a stall condition. Temperature sensors integrated in the stator prevent the drive from overloading in any case.

LONG LIFESPAN

Since the linear motion is generated purely magnetically, and no mechanical force transmission takes place, even extremely dynamic applications can be implemented with a long lifespan.

Type Code

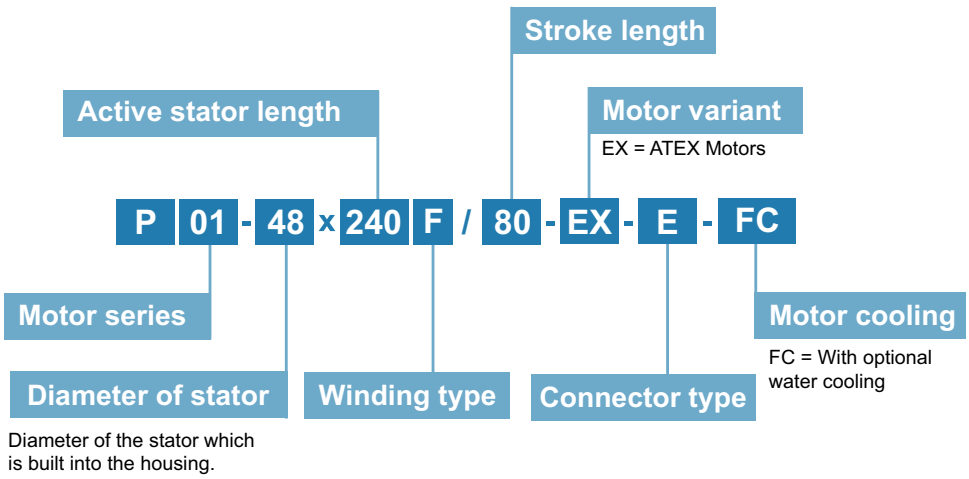

For explanations of the terms, please refer to the section "Glossary"

LINEAR MOTORS P01-48x240F-EX



- For use in an explosive atmosphere consisting of gases, vapors, mist, or dust
- Welded connections
- Completely encapsulated
- Optional integrated water cooling

LINEAR MOTORS P01-48x240F-EX

Technical Data **679**

Motor Specifications

P01-48x240F/80x80-EX-E **682**

P01-48x240F/200x200-EX-E **683**

P01-48x240F/290x290-EX-E **684**

P01-48x240F/380x380-EX-E **685**

P01-48x240F/500x500-EX-E **686**

P01-48x240F/590x590-EX-E **687**

P01-48x240F/800x800-EX-E **688**

P01-48x240F/980x980-EX-E **689**

Linear Guides **690**

Accessories **691**



MOTOR FAMILY P01-48x240F-EX

Technical Data				
Stroke				
Max. Stroke	mm	(in)	980	(38.6)
Force				
Max. Force @ 48VDC	N	(lbf)	496	(111)
Max. Force @ 72VDC	N	(lbf)	496	(111)
Max. Cont. Force [Passive cooling/ Fan / Fluid]	N	(lbf)	84 / - / 240	(19 / - / 53)
Max. Border Force relative	%		≤ 100	
Force Constant	N/A_{pk}	(lbf/A_{pk})	19.1	(4.29)
Velocity				
Max. Velocity @ 48VDC	m/s	(in/s)	2.2	(90.9)
Max. Velocity @ 72VDC	m/s	(in/s)	3.4	(139.9)
Position Detection				
Position Resolution	mm	(in)	0.007	(0.0003)
Repeatability	mm	(in)	±0.05	(±0.002)
Position Resolution with ES	mm	(in)	0.001	(0.00004)
Repeatability with ES	mm	(in)	±0.01	(±0.0004)
Linearity with ES	mm	(in)	±0.01	(±0.0004)
Electrical Data				
Max. Current @ 48VDC	A_{pk}		25.9	
Max. Current @ 72VDC	A_{pk}		25.9	
Max. Cont. Current [Passive cooling /Fan / Fluid]	A_{pk}		4.4 / - / 12	
Terminal Resistance 25 °C / 120 °C	Ohm		0.97 / 1.3	
Terminal Inductivity	mH		1.1	
Magnetic Period	mm	(in)	60	(2.35)
Thermal Data				
Max. Winding Temperature (Sensor)	°C		90	
Thermal Resistance [Passive cooling / Fan / Fluid]	°K/W		2 / - / 0.26	
Thermal Time Constant [Passive cooling / Fan / Fluid]	s		2100 / - / 260	
Mechanical Data				
Stator Diameter	mm	(in)	60	(2.4)
Stator Length	mm	(in)	395	(16)
Stator Mass	g	(lb)	4270	(9.4)
Slider Diameter	mm	(in)	27	(1.1)
Slider Length	mm	(in)	350 - 1400	(14 - 55)
Slider Mass	g	(lb)	1360 - 5910	(3 - 13)
IP Code			IP 69k	

CE 1258 Ex 2G Ex eb IIC T6... T4 Gb

CE 1258 Ex 2D Ex tb IIIC T85°C... T135°C Db

STATOR

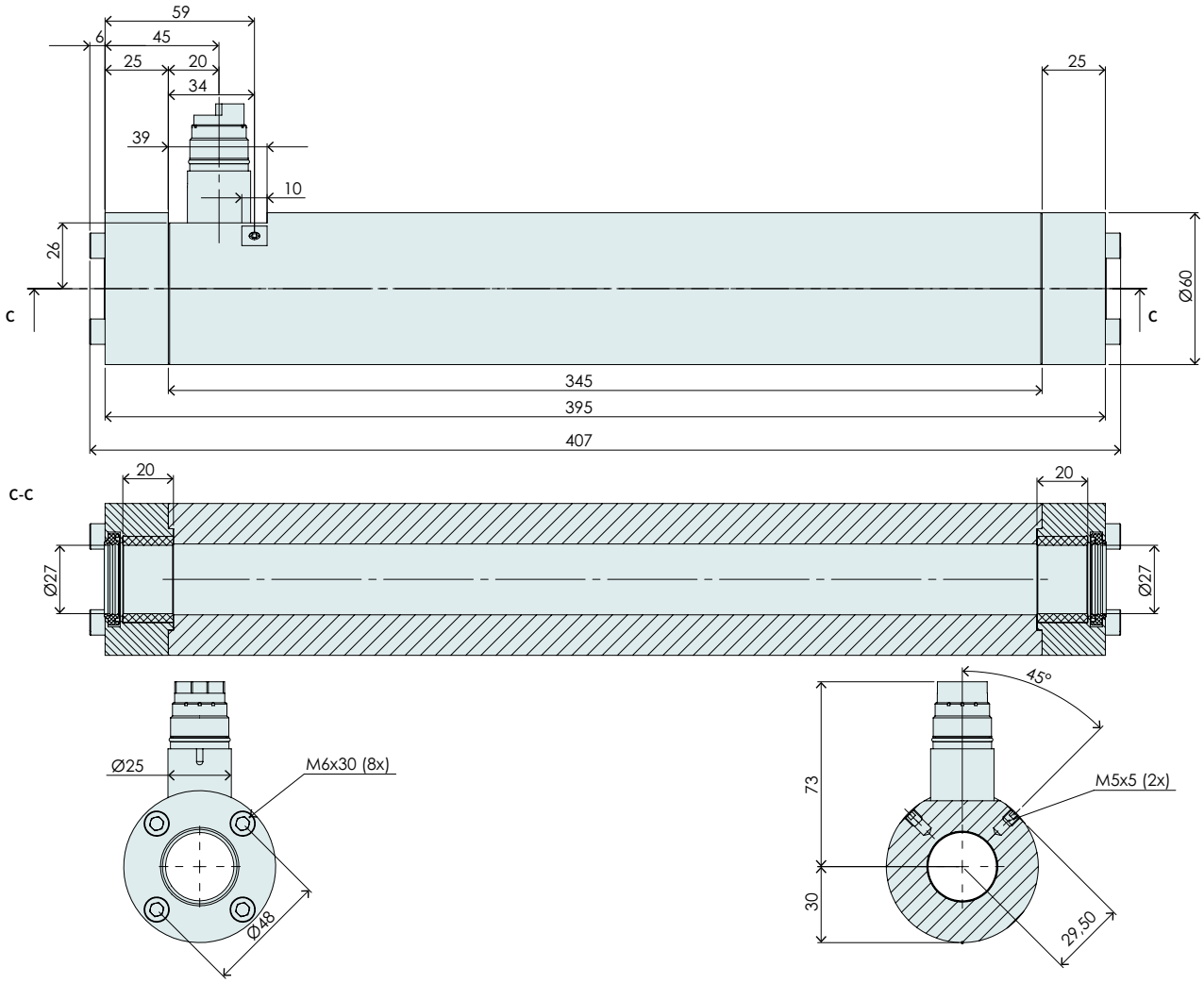

Item	Description	Item-No.
PS01-48x240F-EX-E	Stator EX, IP67	0150-2544
PS01-48x240F-EX-E-FC	Stator EX, IP67, FC	0150-1299

CONNECTOR

Motor Connector Wiring	PS01-48x240F-EX-E PS01-48x240F-EX-E-FC E6k-Connector	Wire Color Motor Cable
Ph 1+	A	red
Ph 1-	B	pink
Ph 2+	C	blue
Ph 2-	D	grey
PE	Protective Earth	green-yellow
+5VDC	1	white
GND	2	Inner Shield
Sinus	3	yellow
Cosinus	4	green
Temp.	5	black
n. c.	6	–
Kty 1+	7	orange
Kty 1-	8	brown
Kty 2+	9	purple
Kty 2-	10	beige

E6k-Connector

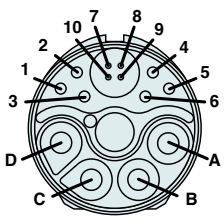

View: Motor connector, plug side

SLIDER

Slider High Clearance

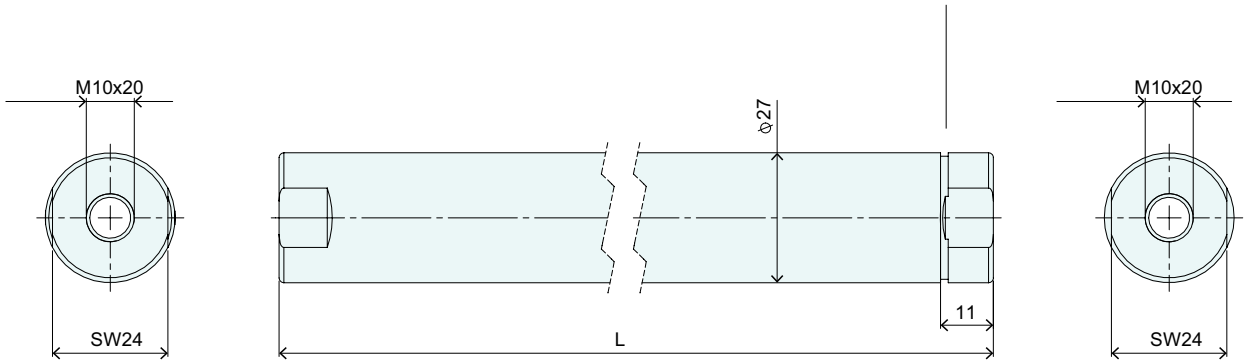

Slider High Clearance			
Item	Description	Max. Stroke [mm]	Item-No.
PL01-27x500/420	Slider 'High Clearance'	80	0150-1469
PL01-27x620/540	Slider 'High Clearance'	200	0150-1470
PL01-27x710/630	Slider 'High Clearance'	290	0150-1471
PL01-27x800/720	Slider 'High Clearance'	380	0150-1472
PL01-27x920/840	Slider 'High Clearance'	500	0150-1447
PL01-27x1010/930	Slider 'High Clearance'	590	0150-1473
PL01-27x1220/1140	Slider 'High Clearance'	800	0150-1587
PL01-27x1400/1320	Slider 'High Clearance'	980	0150-1588

P01-48x240F/80x80-EX-E

Max. Stroke: 80 mm
Peak Force: 496 N

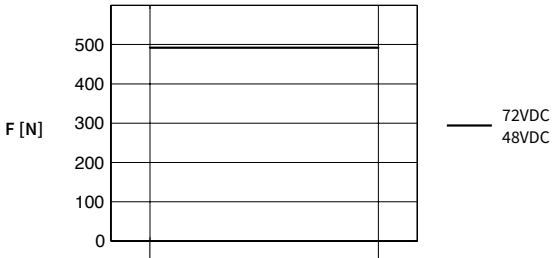

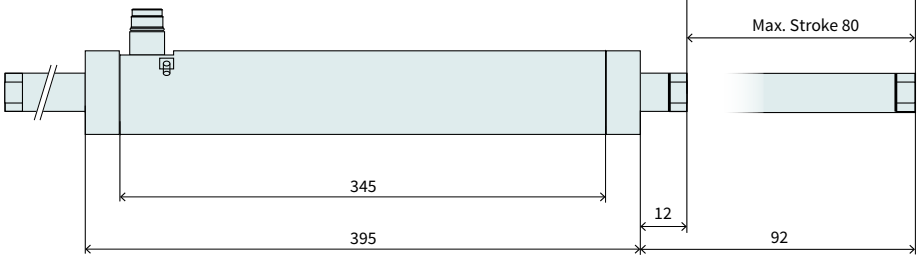

Dimensions in mm

Technical Data P01-48x240F/80x80-EX-E				
Stroke				
Max. Stroke	mm	(in)	80	(3.14)
Force				
Max. Force @ 48VDC	N	(lbf)	496	(111)
Max. Force @ 72VDC	N	(lbf)	496	(111)
Max. Cont. Force [Passive cooling/ Fan / Fluid]	N	(lbf)	84 / - / 240	(19 / - / 53)
Max. Border Force relative	%		100	
Force Constant	N/A_{pk}	(lbf/A_{pk})	19.1	(4.29)
Velocity				
Max. Velocity @ 48VDC	m/s	(in/s)	2.2	(90.9)
Max. Velocity @ 72VDC	m/s	(in/s)	3.4	(139.9)
Position Detection				
Repeatability	mm	(in)	±0.05	(±0.002)
Linearity	%		± 1.05	
Electrical Data				
Max. Current @ 48VDC	A_{pk}		25.9	
Max. Current @ 72VDC	A_{pk}		25.9	
Max. Cont. Current [Passive cooling /Fan / Fluid]	A_{pk}		4.4 / - / 12	
Thermal Data				
Max. Winding Temperature (Sensor)	°C		90	
Thermal Resistance [Passive cooling / Fan / Fluid]	°K/W		2 / - / 0.26	
Thermal Time Constant [Passive cooling / Fan / Fluid]	s		2100 / - / 260	
Mechanical Data				
Slider Length	mm	(in)	500	(20)
Slider Mass	g	(lb)	2010	(4.42)

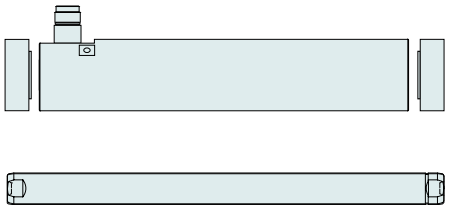

Item	Description	Item-No.
PS01-48x240F-EX-E	Stator EX, IP67	0150-2544
PS01-48x240F-EX-E-FC	Stator EX, IP67, FC	0150-1299
PB01-48x25-P-SSC*	Bearing for PS01-48x240-SSC (Stainless)	0150-3281
PL01-27x500/420	Slider 'High Clearance'	0150-1469

* 2 Bearing kits must be ordered separately.

P01-48x240F/200x200-EX-E

Max. Stroke: 200 mm
Peak Force: 496 N

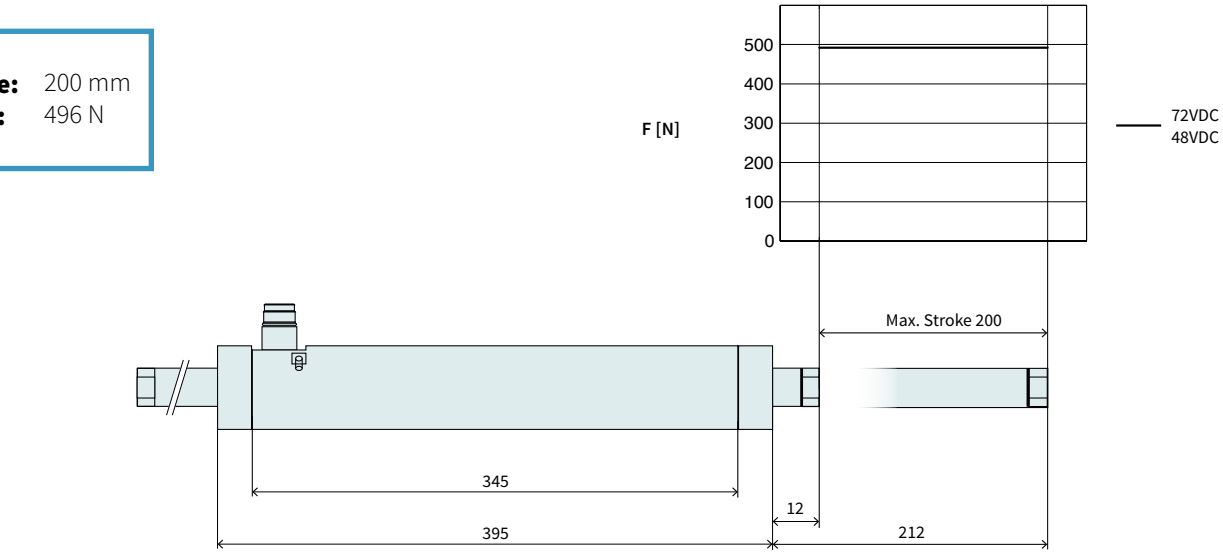

Dimensions in mm

Technical Data P01-48x240F/200x200-EX-E				
Stroke				
Max. Stroke	mm	(in)	200	(7.86)
Force				
Max. Force @ 48VDC	N	(lbf)	496	(111)
Max. Force @ 72VDC	N	(lbf)	496	(111)
Max. Cont. Force [Passive cooling/ Fan / Fluid]	N	(lbf)	84 / - / 240	(19 / - / 53)
Max. Border Force relative	%		100	
Force Constant	N/A_{pk}	(lbf/A_{pk})	19.1	(4.29)
Velocity				
Max. Velocity @ 48VDC	m/s	(in/s)	2.2	(90.9)
Max. Velocity @ 72VDC	m/s	(in/s)	3.4	(139.9)
Position Detection				
Repeatability	mm	(in)	±0.05	(±0.002)
Linearity	%		± 0.5	
Electrical Data				
Max. Current @ 48VDC	A_{pk}		25.9	
Max. Current @ 72VDC	A_{pk}		25.9	
Max. Cont. Current [Passive cooling /Fan / Fluid]	A_{pk}		4.4 / - / 12	
Thermal Data				
Max. Winding Temperature (Sensor)	°C		90	
Thermal Resistance [Passive cooling / Fan / Fluid]	°K/W		2 / - / 0.26	
Thermal Time Constant [Passive cooling / Fan / Fluid]	s		2100 / - / 260	
Mechanical Data				
Slider Length	mm	(in)	620	(24)
Slider Mass	g	(lb)	2530	(5.57)

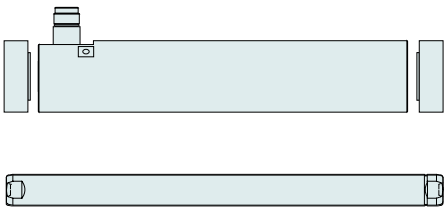

Item	Description	Item-No.
PS01-48x240F-EX-E	Stator EX, IP67	0150-2544
PS01-48x240F-EX-E-FC	Stator EX, IP67, FC	0150-1299
PB01-48x25-P-SSC*	Bearing for PS01-48x240-SSC (Stainless)	0150-3281
PL01-27x620/540	Slider 'High Clearance'	0150-1470

* 2 Bearing kits must be ordered separately.

P01-48x240F/290x290-EX-E

Max. Stroke: 290 mm
Peak Force: 496 N

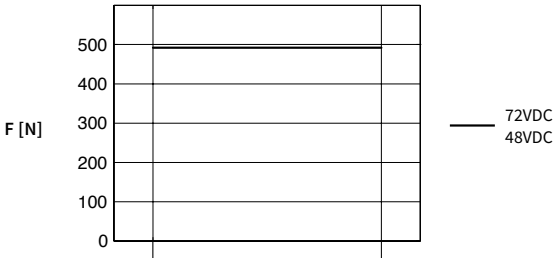

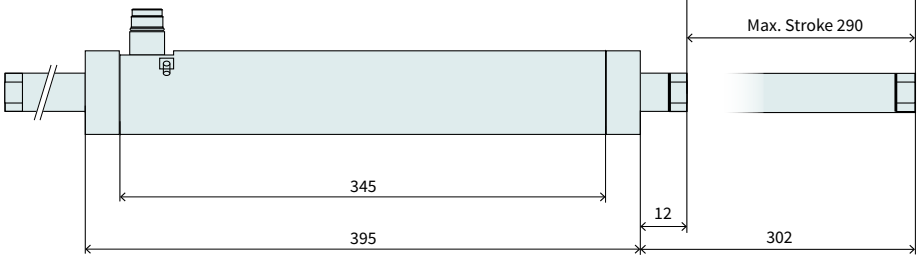

Dimensions in mm

Technical Data P01-48x240F/290x290-EX-E				
Stroke				
Max. Stroke	mm	(in)	290	(11.4)
Force				
Max. Force @ 48VDC	N	(lbf)	496	(111)
Max. Force @ 72VDC	N	(lbf)	496	(111)
Max. Cont. Force [Passive cooling/ Fan / Fluid]	N	(lbf)	84 / - / 240	(19 / - / 53)
Max. Border Force relative	%		100	
Force Constant	N/A_{pk}	(lbf/A_{pk})	19.1	(4.29)
Velocity				
Max. Velocity @ 48VDC	m/s	(in/s)	2.2	(90.9)
Max. Velocity @ 72VDC	m/s	(in/s)	3.4	(139.9)
Position Detection				
Repeatability	mm	(in)	±0.05	(±0.002)
Linearity	%		± 0.35	
Electrical Data				
Max. Current @ 48VDC	A_{pk}		25.9	
Max. Current @ 72VDC	A_{pk}		25.9	
Max. Cont. Current [Passive cooling /Fan / Fluid]	A_{pk}		4.4 / - / 12	
Thermal Data				
Max. Winding Temperature (Sensor)	°C		90	
Thermal Resistance [Passive cooling / Fan / Fluid]	°K/W		2 / - / 0.26	
Thermal Time Constant [Passive cooling / Fan / Fluid]	s		2100 / - / 260	
Mechanical Data				
Slider Length	mm	(in)	710	(28)
Slider Mass	g	(lb)	2920	(6.42)

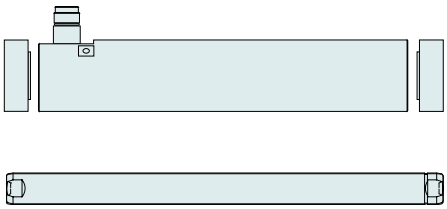

Item	Description	Item-No.
PS01-48x240F-EX-E	Stator EX, IP67	0150-2544
PS01-48x240F-EX-E-FC	Stator EX, IP67, FC	0150-1299
PB01-48x25-P-SSC*	Bearing for PS01-48x240-SSC (Stainless)	0150-3281
PL01-27x710/630	Slider 'High Clearance'	0150-1471

* 2 Bearing kits must be ordered separately.

P01-48x240F/380x380-EX-E

Max. Stroke: 380 mm
Peak Force: 496 N



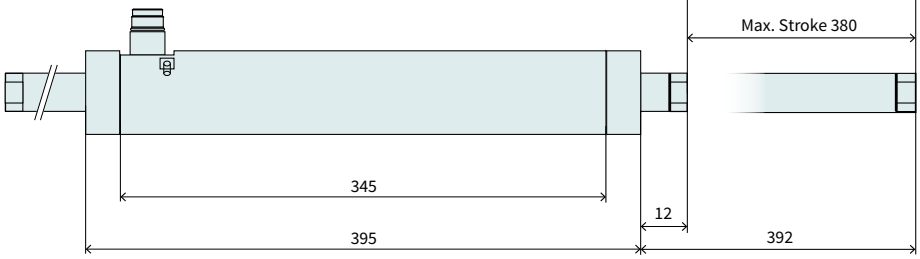

Dimensions in mm

Technical Data P01-48x240F/380x380-EX-E				
Stroke				
Max. Stroke	mm	(in)	380	(14.99)
Force				
Max. Force @ 48VDC	N	(lbf)	496	(111)
Max. Force @ 72VDC	N	(lbf)	496	(111)
Max. Cont. Force [Passive cooling/ Fan / Fluid]	N	(lbf)	84 / - / 240	(19 / - / 53)
Max. Border Force relative	%		100	
Force Constant	N/A_{pk}	(lbf/A_{pk})	19.1	(4.29)
Velocity				
Max. Velocity @ 48VDC	m/s	(in/s)	2.2	(90.9)
Max. Velocity @ 72VDC	m/s	(in/s)	3.4	(139.9)
Position Detection				
Repeatability	mm	(in)	±0.05	(±0.002)
Linearity	%		± 0.3	
Electrical Data				
Max. Current @ 48VDC	A_{pk}		25.9	
Max. Current @ 72VDC	A_{pk}		25.9	
Max. Cont. Current [Passive cooling /Fan / Fluid]	A_{pk}		4.4 / - / 12	
Thermal Data				
Max. Winding Temperature (Sensor)	°C		90	
Thermal Resistance [Passive cooling / Fan / Fluid]	°K/W		2 / - / 0.26	
Thermal Time Constant [Passive cooling / Fan / Fluid]	s		2100 / - / 260	
Mechanical Data				
Slider Length	mm	(in)	800	(31)
Slider Mass	g	(lb)	3310	(7.28)

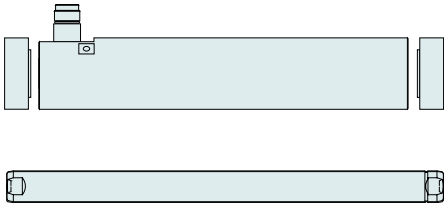

Item	Description	Item-No.
PS01-48x240F-EX-E	Stator EX, IP67	0150-2544
PS01-48x240F-EX-E-FC	Stator EX, IP67, FC	0150-1299
PB01-48x25-P-SSC*	Bearing for PS01-48x240-SSC (Stainless)	0150-3281
PL01-27x800/720	Slider 'High Clearance'	0150-1472

* 2 Bearing kits must be ordered separately.

P01-48x240F/500x500-EX-E

Max. Stroke: 500 mm
Peak Force: 496 N

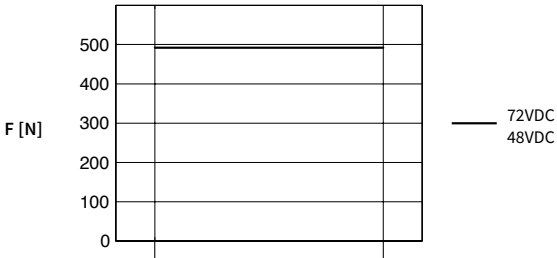

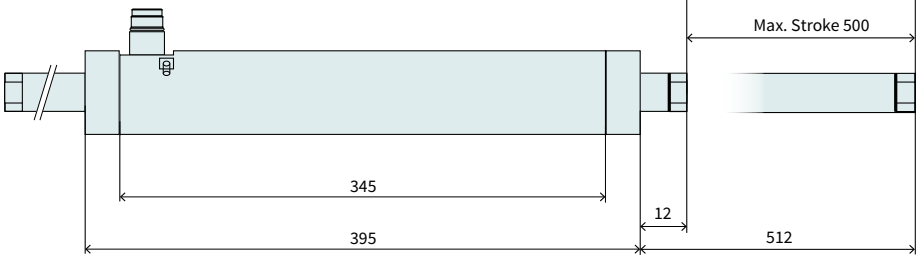

Dimensions in mm

Technical Data P01-48x240F/500x500-EX-E				
Stroke				
Max. Stroke	mm	(in)	500	(19.69)
Force				
Max. Force @ 48VDC	N	(lbf)	496	(111)
Max. Force @ 72VDC	N	(lbf)	496	(111)
Max. Cont. Force [Passive cooling/ Fan / Fluid]	N	(lbf)	84 / - / 240	(19 / - / 53)
Max. Border Force relative	%		100	
Force Constant	N/A_{pk}	(lbf/A_{pk})	19.1	(4.29)
Velocity				
Max. Velocity @ 48VDC	m/s	(in/s)	2.2	(90.9)
Max. Velocity @ 72VDC	m/s	(in/s)	3.4	(139.9)
Position Detection				
Repeatability	mm	(in)	±0.05	(±0.002)
Linearity	%		± 0.25	
Electrical Data				
Max. Current @ 48VDC	A_{pk}		25.9	
Max. Current @ 72VDC	A_{pk}		25.9	
Max. Cont. Current [Passive cooling /Fan / Fluid]	A_{pk}		4.4 / - / 12	
Thermal Data				
Max. Winding Temperature (Sensor)	°C		90	
Thermal Resistance [Passive cooling / Fan / Fluid]	°K/W		2 / - / 0.26	
Thermal Time Constant [Passive cooling / Fan / Fluid]	s		2100 / - / 260	
Mechanical Data				
Slider Length	mm	(in)	920	(36)
Slider Mass	g	(lb)	3830	(8.43)

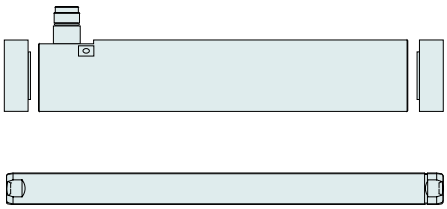

Item	Description	Item-No.
PS01-48x240F-EX-E	Stator EX, IP67	0150-2544
PS01-48x240F-EX-E-FC	Stator EX, IP67, FC	0150-1299
PB01-48x25-P-SSC*	Bearing for PS01-48x240-SSC (Stainless)	0150-3281
PL01-27x920/840	Slider 'High Clearance'	0150-1447

* 2 Bearing kits must be ordered separately.

P01-48x240F/590x590-EX-E

Max. Stroke: 590 mm
Peak Force: 496 N

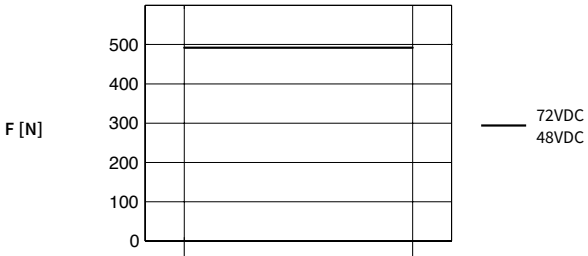

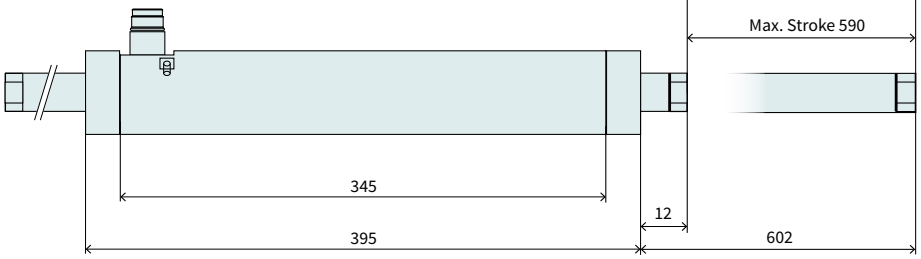

Dimensions in mm

Technical Data P01-48x240F/590x590-EX-E				
Stroke				
Max. Stroke	mm	(in)	590	(23.19)
Force				
Max. Force @ 48VDC	N	(lbf)	496	(111)
Max. Force @ 72VDC	N	(lbf)	496	(111)
Max. Cont. Force [Passive cooling/ Fan / Fluid]	N	(lbf)	84 / - / 240	(19 / - / 53)
Max. Border Force relative	%		100	
Force Constant	N/A_{pk}	(lbf/A_{pk})	19.1	(4.29)
Velocity				
Max. Velocity @ 48VDC	m/s	(in/s)	2.2	(90.9)
Max. Velocity @ 72VDC	m/s	(in/s)	3.4	(139.9)
Position Detection				
Repeatability	mm	(in)	±0.05	(±0.002)
Linearity	%		± 0.25	
Electrical Data				
Max. Current @ 48VDC	A_{pk}		25.9	
Max. Current @ 72VDC	A_{pk}		25.9	
Max. Cont. Current [Passive cooling /Fan / Fluid]	A_{pk}		4.4 / - / 12	
Thermal Data				
Max. Winding Temperature (Sensor)	°C		90	
Thermal Resistance [Passive cooling / Fan / Fluid]	°K/W		2 / - / 0.26	
Thermal Time Constant [Passive cooling / Fan / Fluid]	s		2100 / - / 260	
Mechanical Data				
Slider Length	mm	(in)	1010	(40)
Slider Mass	g	(lb)	4220	(9.28)

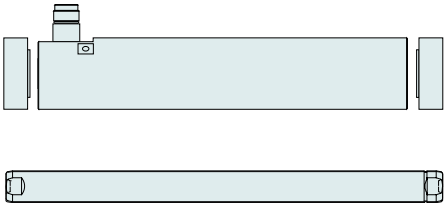

Item	Description	Item-No.
PS01-48x240F-EX-E	Stator EX, IP67	0150-2544
PS01-48x240F-EX-E-FC	Stator EX, IP67, FC	0150-1299
PB01-48x25-P-SSC*	Bearing for PS01-48x240-SSC (Stainless)	0150-3281
PL01-27x1010/930	Slider 'High Clearance'	0150-1473

* 2 Bearing kits must be ordered separately.

P01-48x240F/800x800-EX-E

Max. Stroke: 800 mm
Peak Force: 496 N

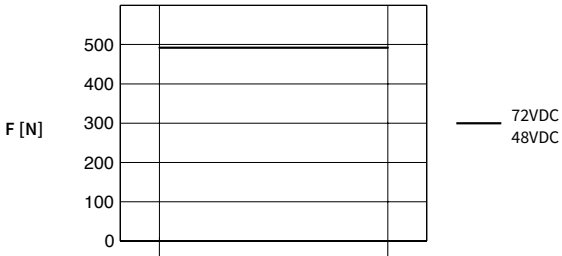

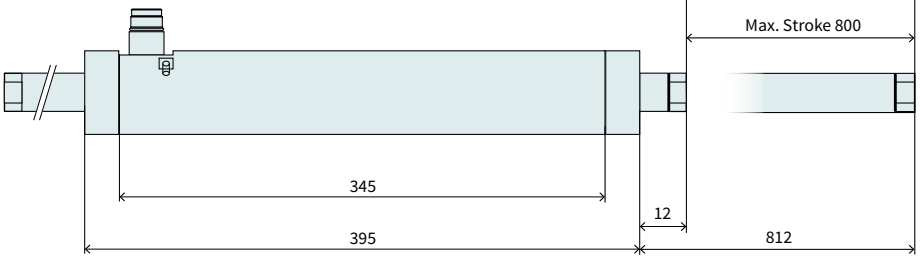

Dimensions in mm

Technical Data P01-48x240F/800x800-EX-E				
Stroke				
Max. Stroke	mm	(in)	800	(31.49)
Force				
Max. Force @ 48VDC	N	(lbf)	496	(111)
Max. Force @ 72VDC	N	(lbf)	496	(111)
Max. Cont. Force [Passive cooling/ Fan / Fluid]	N	(lbf)	84 / - / 240	(19 / - / 53)
Max. Border Force relative	%		100	
Force Constant	N/A_{pk}	(lbf/A_{pk})	19.1	(4.29)
Velocity				
Max. Velocity @ 48VDC	m/s	(in/s)	2.2	(90.9)
Max. Velocity @ 72VDC	m/s	(in/s)	3.4	(139.9)
Position Detection				
Repeatability	mm	(in)	±0.05	(±0.002)
Linearity	%		± 0.2	
Electrical Data				
Max. Current @ 48VDC	A_{pk}		25.9	
Max. Current @ 72VDC	A_{pk}		25.9	
Max. Cont. Current [Passive cooling /Fan / Fluid]	A_{pk}		4.4 / - / 12	
Thermal Data				
Max. Winding Temperature (Sensor)	°C		90	
Thermal Resistance [Passive cooling / Fan / Fluid]	°K/W		2 / - / 0.26	
Thermal Time Constant [Passive cooling / Fan / Fluid]	s		2100 / - / 260	
Mechanical Data				
Slider Length	mm	(in)	1220	(48)
Slider Mass	g	(lb)	5130	(11.29)

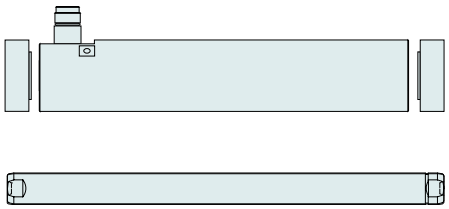

Item	Description	Item-No.
PS01-48x240F-EX-E	Stator EX, IP67	0150-2544
PS01-48x240F-EX-E-FC	Stator EX, IP67, FC	0150-1299
PB01-48x25-P-SSC*	Bearing for PS01-48x240-SSC (Stainless)	0150-3281
PL01-27x1220/1140	Slider 'High Clearance'	0150-1587

* 2 Bearing kits must be ordered separately.

P01-48x240F/980x980-EX-E

Max. Stroke: 980 mm
Peak Force: 496 N



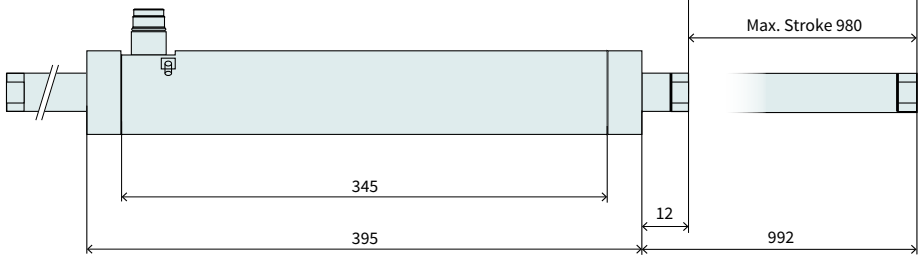

Dimensions in mm

Technical Data P01-48x240F/980x980-EX-E				
Stroke				
Max. Stroke	mm	(in)	980	(38.6)
Force				
Max. Force @ 48VDC	N	(lbf)	496	(111)
Max. Force @ 72VDC	N	(lbf)	496	(111)
Max. Cont. Force [Passive cooling/ Fan / Fluid]	N	(lbf)	84 / - / 240	(19 / - / 53)
Max. Border Force relative	%		100	
Force Constant	N/A_{pk}	(lbf/A_{pk})	19.1	(4.29)
Velocity				
Max. Velocity @ 48VDC	m/s	(in/s)	2.2	(90.9)
Max. Velocity @ 72VDC	m/s	(in/s)	3.4	(139.9)
Position Detection				
Repeatability	mm	(in)	±0.05	(±0.002)
Linearity	%		± 0.2	
Electrical Data				
Max. Current @ 48VDC	A_{pk}		25.9	
Max. Current @ 72VDC	A_{pk}		25.9	
Max. Cont. Current [Passive cooling /Fan / Fluid]	A_{pk}		4.4 / - / 12	
Thermal Data				
Max. Winding Temperature (Sensor)	°C		90	
Thermal Resistance [Passive cooling / Fan / Fluid]	°K/W		2 / - / 0.26	
Thermal Time Constant [Passive cooling / Fan / Fluid]	s		2100 / - / 260	
Mechanical Data				
Slider Length	mm	(in)	1400	(55)
Slider Mass	g	(lb)	5910	(13)

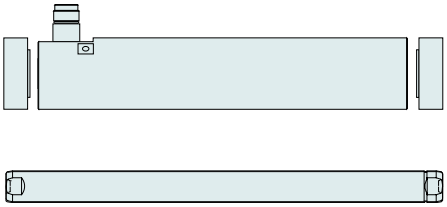

Item	Description	Item-No.
PS01-48x240F-EX-E	Stator EX, IP67	0150-2544
PS01-48x240F-EX-E-FC	Stator EX, IP67, FC	0150-1299
PB01-48x25-P-SSC*	Bearing for PS01-48x240-SSC (Stainless)	0150-3281
PL01-27x1400/1320	Slider 'High Clearance'	0150-1588

* 2 Bearing kits must be ordered separately.

Linear Guides H01-SSC



6

HM01-48x240/210-SSC	Linear module SSC 48x240 with 210 mm Stroke		
H-Guide	H01-48x401/210-SSC	H-Guide for PS01-48x240F-HP-SSC, Stroke max. 210 mm	0150-5280
Stator	PS01-48x240F-EX-E	Stator EX, IP67	0150-2544
	PS01-48x240F-EX-E-FC	Stator EX, IP67, FC	0150-1299
Slider	PL01-27x620/540	Slider 'High Clearance'	0150-1470

HM01-48x240/300-SSC	Linear module SSC 48x240 with 300 mm Stroke		
H-Guide	H01-48x401/300-SSC	H-Guide for PS01-48x240F-HP-SSC, Stroke max. 300 mm	0150-5281
Stator	PS01-48x240F-EX-E	Stator EX, IP67	0150-2544
	PS01-48x240F-EX-E-FC	Stator EX, IP67, FC	0150-1299
Slider	PL01-27x710/630	Slider 'High Clearance'	0150-1471

HM01-48x240/390-SSC	Linear module SSC 48x240 with 390 mm Stroke		
H-Guide	H01-48x401/390-SSC	H-Guide for PS01-48x240F-HP-SSC, Stroke max. 390 mm	0150-5282
Stator	PS01-48x240F-EX-E	Stator EX, IP67	0150-2544
	PS01-48x240F-EX-E-FC	Stator EX, IP67, FC	0150-1299
Slider	PL01-27x800/720	Slider 'High Clearance'	0150-1472

HM01-48x240/510-SSC	Linear module SSC 48x240 with 510 mm Stroke		
H-Guide	H01-48x401/510-SSC	H-Guide for PS01-48x240F-HP-SSC, Stroke max. 510 mm	0150-5283
Stator	PS01-48x240F-EX-E	Stator EX, IP67	0150-2544
	PS01-48x240F-EX-E-FC	Stator EX, IP67, FC	0150-1299
Slider	PL01-27x920/840	Slider 'High Clearance'	0150-1447

FIND MORE PRODUCT DETAILS IN THE CHAPTER "LINEAR GUIDES".

Motor Cable

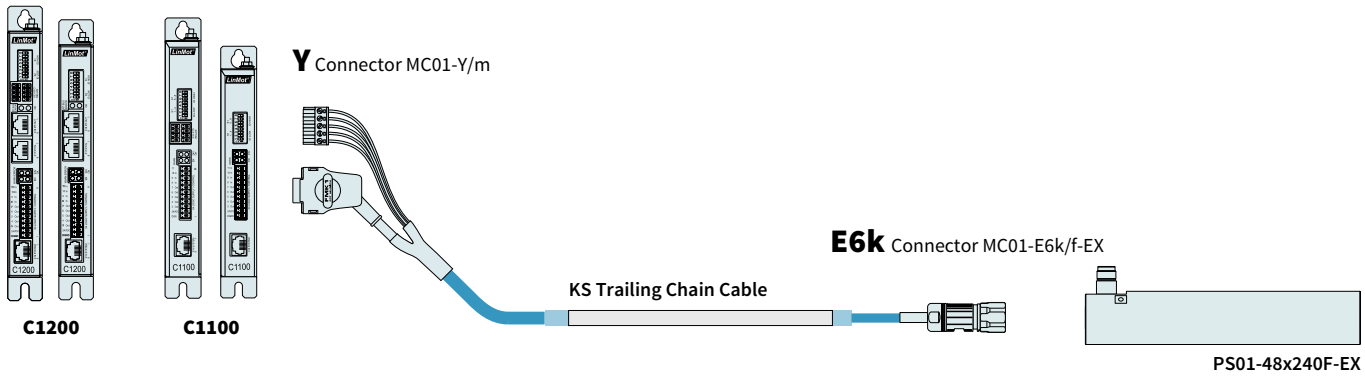

ORDERING INFORMATION

TRAILING CHAIN CABLE		
Item	**Description**	**Item-No.**
KS10-EX-Y-Fe/E6k-	Trailing Chain Cable KS10-EX-Y-Fe/E6k-, Custom length	0150-3642

CONNECTOR & CABLE (INDIVIDUAL)		
Item	**Description**	**Item-No.**
MC01-Y-Fe/m	Motor Connector Y-Fe/m	0150-3289
MC01-E6k/f-EX	Connerctor with hexagonal union nut	0150-3538
KS10-05/05/04-EX	Motor cable for EX applications per m	0150-9010

SLIDER MOUNTING





Item	Description	Item-No.
PLF01-28-SS	Fixed Bearing Set for 27/28 mm sliders, stainless steel	0150-3297
PLL01-27	Floating Bearing for 27 mm sliders	0150-3294

FIND MORE PRODUCT DETAILS IN THE CHAPTER „ACCESSORIES“.

BEARING KIT

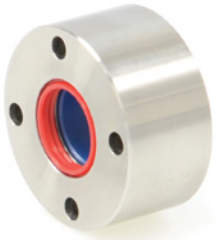

Item	Description	Item-No.
PB01-48x25-P-SSC	Bearing for PS01-48x240-SSC (Stainless)	0150-3281

FIND MORE PRODUCT DETAILS IN THE CHAPTER „ACCESSORIES“.

LINEAR MOTORS P01-48x360F-EX

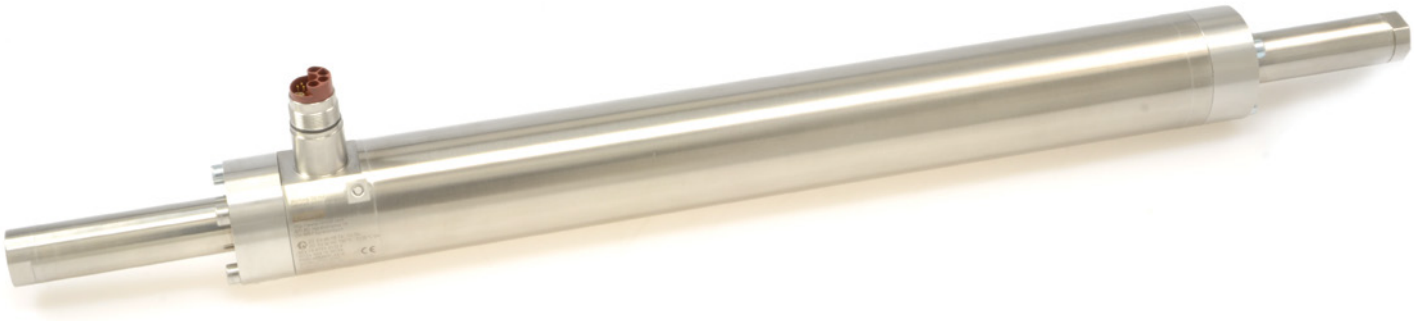

- For use in an explosive atmosphere consisting of gases, vapors, mist, or dust
- Welded connections
- Completely encapsulated
- Optional integrated water cooling

LINEAR MOTORS P01-48x360F-EX

Technical Data ____ **695**

Motor Specifications

P01-48x360F/80x80-EX-E **698**

P01-48x360F/170x170-EX-E **699**

P01-48x360F/260x260-EX-E **700**

P01-48x360F/380x380-EX-E **701**

P01-48x360F/470x470-EX-E **702**

P01-48x360F/680x680-EX-E **703**

P01-48x360F/860x860-EX-E **704**

Accessories ____ **705**

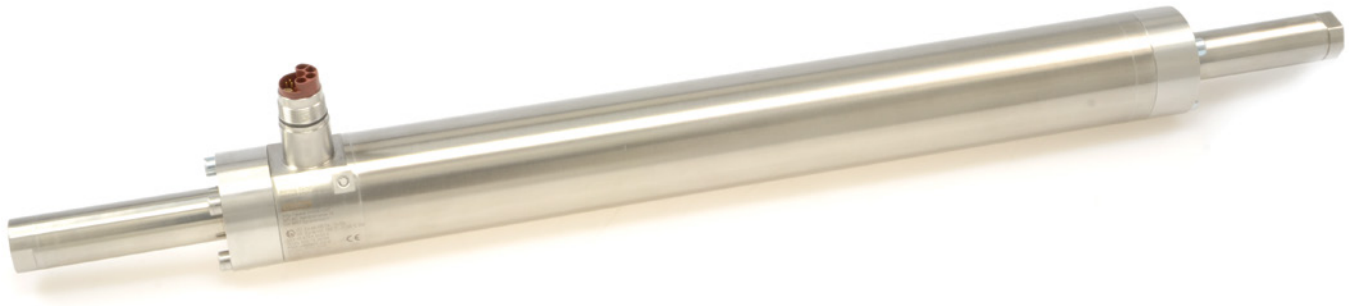

MOTOR FAMILY P01-48X360F-EX

Technical Data				
Stroke				
Max. Stroke	mm	(in)	860	(33.9)
Force				
Max. Force @ 48VDC	N	(lbf)	721	(162)
Max. Force @ 72VDC	N	(lbf)	721	(162)
Max. Cont. Force [Passive cooling/ Fan / Fluid]	N	(lbf)	130 / - / 350	(29 / - / 80)
Max. Border Force relative	%		≤ 100	
Force Constant	N/A_{pk}	(lbf/A_{pk})	27.7	(6.24)
Velocity				
Max. Velocity @ 48VDC	m/s	(in/s)	1.6	(62.9)
Max. Velocity @ 72VDC	m/s	(in/s)	2.3	(93.9)
Position Detection				
Position Resolution	mm	(in)	0.007	(0.0003)
Repeatability	mm	(in)	±0.05	(±0.002)
Position Resolution with ES	mm	(in)	0.001	(0.00004)
Repeatability with ES	mm	(in)	±0.01	(±0.0004)
Linearity with ES	mm	(in)	±0.01	(±0.0004)
Electrical Data				
Max. Current @ 48VDC	A_{pk}		25.9	
Max. Current @ 72VDC	A_{pk}		25.9	
Max. Cont. Current [Passive cooling /Fan / Fluid]	A_{pk}		4.6 / - / 13	
Terminal Resistance 25 °C / 120 °C	Ohm		1.4 / 1.9	
Terminal Inductivity	mH		1.6	
Magnetic Period	mm	(in)	60	(2.35)
Thermal Data				
Max. Winding Temperature (Sensor)	°C		90	
Thermal Resistance [Passive cooling / Fan / Fluid]	°K/W		1.3 / - / 0.17	
Thermal Time Constant [Passive cooling / Fan / Fluid]	s		1900 / - / 240	
Mechanical Data				
Stator Diameter	mm	(in)	60	(2.4)
Stator Length	mm	(in)	515	(20)
Stator Mass	g	(lb)	5560	(12.23)
Slider Diameter	mm	(in)	27	(1.1)
Slider Length	mm	(in)	500 - 1400	(20 - 55)
Slider Mass	g	(lb)	2010 - 5910	(4.42 - 13)
IP Code			IP 69k	

CE 1258 Ex 2G Ex eb IIC T6... T4 Gb

CE 1258 Ex 2D Ex tb IIIC T85°C... T135°C Db

STATOR

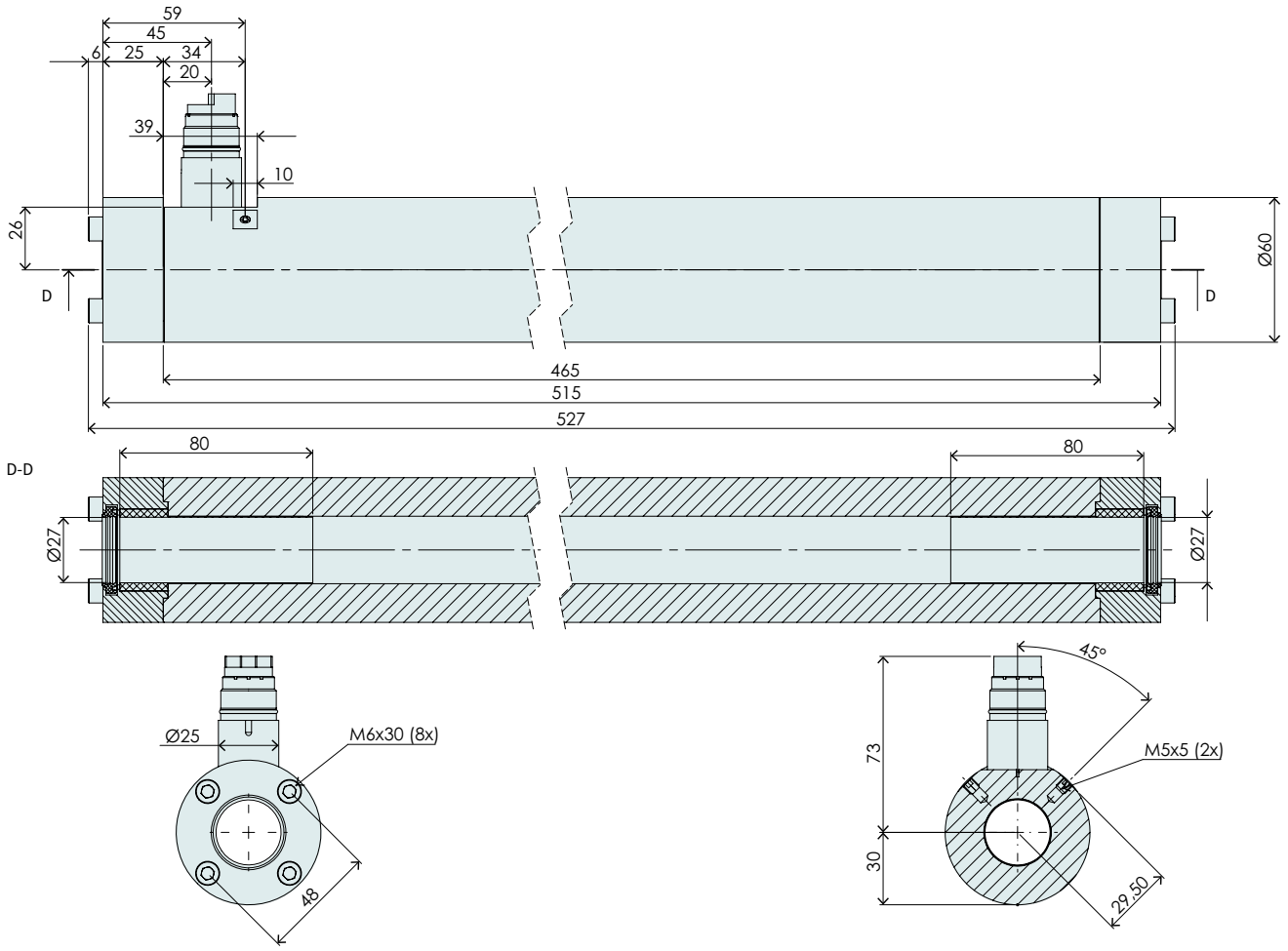

Item	Description	Item-No.
PS01-48x360F-EX-E	Stator EX, IP67	0150-2545
PS01-48x360F-EX-E-FC	Stator EX, IP67, Fluid-Kuhlung	0150-1300

CONNECTOR

Motor Connector Wiring	PS01-48x360F-EX-E PS01-48x360F-EX-E-FC E6k-Connector	Wire Color Motor Cable
Ph 1+	A	red
Ph 1-	B	pink
Ph 2+	C	blue
Ph 2-	D	grey
PE	Protective Earth	green-yellow
+5VDC	1	white
GND	2	Inner Shield
Sinus	3	yellow
Cosinus	4	green
Temp.	5	black
n. c.	6	–
Kty 1+	7	orange
Kty 1-	8	brown
Kty 2+	9	purple
Kty 2-	10	beige

E6k-Connector

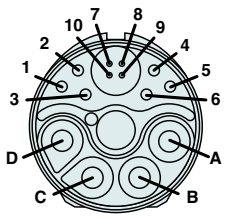

View: Motor connector, plug side

SLIDER

Slider High Clearance

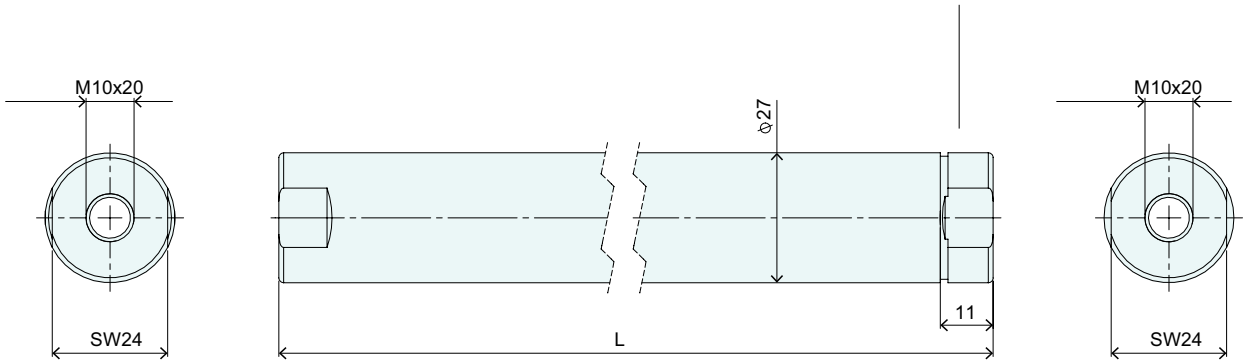

Slider High Clearance			
Item	**Description**	**Max. Stroke [mm]**	**Item-No.**
PL01-27x620/540	Slider 'High Clearance'	80	0150-1470
PL01-27x710/630	Slider 'High Clearance'	170	0150-1471
PL01-27x800/720	Slider 'High Clearance'	260	0150-1472
PL01-27x920/840	Slider 'High Clearance'	380	0150-1447
PL01-27x1010/930	Slider 'High Clearance'	470	0150-1473
PL01-27x1220/1140	Slider 'High Clearance'	680	0150-1587
PL01-27x1400/1320	Slider 'High Clearance'	860	0150-1588

P01-48x360F/80x80-EX-E

Max. Stroke: 80 mm
Peak Force: 721 N

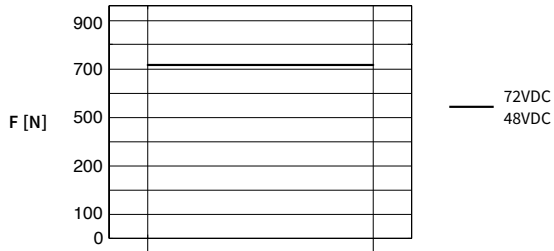

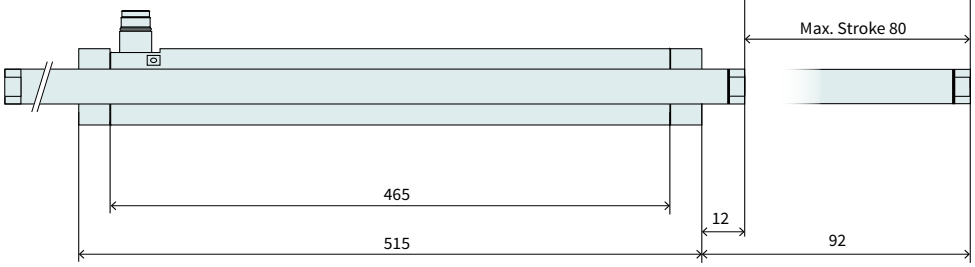

Dimensions in mm

Technical Data P01-48x360F/80x80-EX-E				
Stroke				
Max. Stroke	mm	(in)	80	(3.14)
Force				
Max. Force @ 48VDC	N	(lbf)	721	(162)
Max. Force @ 72VDC	N	(lbf)	721	(162)
Max. Cont. Force [Passive cooling/ Fan / Fluid]	N	(lbf)	130 / - / 350	(29 / - / 80)
Max. Border Force relative	%		100	
Force Constant	N/A_{pk}	(lbf/A_{pk})	27.7	(6.24)
Velocity				
Max. Velocity @ 48VDC	m/s	(in/s)	1.6	(62.9)
Max. Velocity @ 72VDC	m/s	(in/s)	2.3	(93.9)
Position Detection				
Repeatability	mm	(in)	±0.05	(±0.002)
Linearity	%		± 1.05	
Electrical Data				
Max. Current @ 48VDC	A_{pk}		25.9	
Max. Current @ 72VDC	A_{pk}		25.9	
Max. Cont. Current [Passive cooling /Fan / Fluid]	A_{pk}		4.6 / - / 13	
Thermal Data				
Max. Winding Temperature (Sensor)	°C		90	
Thermal Resistance [Passive cooling / Fan / Fluid]	°K/W		1.3 / - / 0.17	
Thermal Time Constant [Passive cooling / Fan / Fluid]	s		1900 / - / 240	
Mechanical Data				
Slider Length	mm	(in)	620	(24)
Slider Mass	g	(lb)	2530	(5.57)

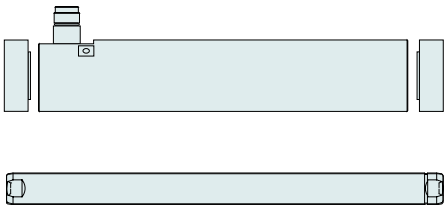

Item	Description	Item-No.
PS01-48x360F-EX-E	Stator EX, IP67	0150-2545
PS01-48x360F-EX-E-FC	Stator EX, IP67, FC	0150-1300
PB01-48x25-80-P-SSC*	Lager for PS01-48x360-SSC / EX	0150-3413
PL01-27x620/540	Slider 'High Clearance'	0150-1470

* 2 Bearing kits must be ordered separately.

P01-48x360F/170x170-EX-E

Max. Stroke: 170 mm
Peak Force: 721 N

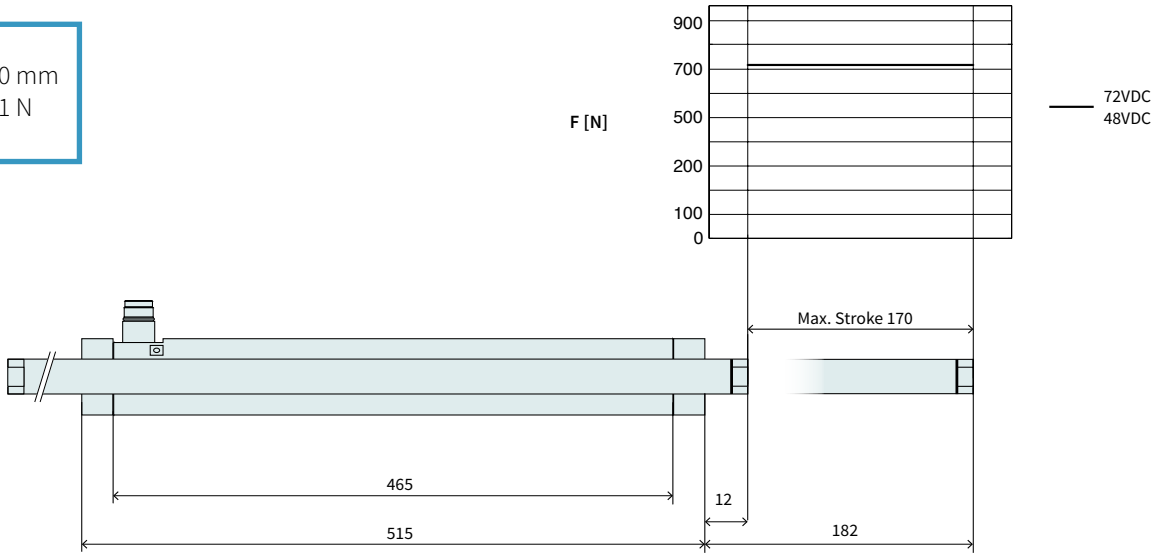

Dimensions in mm

Technical Data P01-48x360F/170x170-EX-E				
Stroke				
Max. Stroke	mm	(in)	170	(6.69)
Force				
Max. Force @ 48VDC	N	(lbf)	721	(162)
Max. Force @ 72VDC	N	(lbf)	721	(162)
Max. Cont. Force [Passive cooling/ Fan / Fluid]	N	(lbf)	130 / - / 350	(29 / - / 80)
Max. Border Force relative	%		100	
Force Constant	N/A_{pk}	(lbf/A_{pk})	27.7	(6.24)
Velocity				
Max. Velocity @ 48VDC	m/s	(in/s)	1.6	(62.9)
Max. Velocity @ 72VDC	m/s	(in/s)	2.3	(93.9)
Position Detection				
Repeatability	mm	(in)	±0.05	(±0.002)
Linearity	%		± 0.55	
Electrical Data				
Max. Current @ 48VDC	A_{pk}		25.9	
Max. Current @ 72VDC	A_{pk}		25.9	
Max. Cont. Current [Passive cooling /Fan / Fluid]	A_{pk}		4.6 / - / 13	
Thermal Data				
Max. Winding Temperature (Sensor)	°C		90	
Thermal Resistance [Passive cooling / Fan / Fluid]	°K/W		1.3 / - / 0.17	
Thermal Time Constant [Passive cooling / Fan / Fluid]	s		1900 / - / 240	
Mechanical Data				
Slider Length	mm	(in)	710	(28)
Slider Mass	g	(lb)	2920	(6.42)

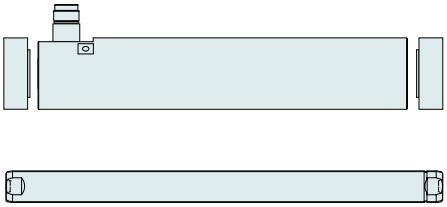

Item	Description	Item-No.
PS01-48x360F-EX-E	Stator EX, IP67	0150-2545
PS01-48x360F-EX-E-FC	Stator EX, IP67, FC	0150-1300
PB01-48x25-80-P-SSC*	Lager for PS01-48x360-SSC / EX	0150-3413
PL01-27x710/630	Slider 'High Clearance'	0150-1471

* 2 Bearing kits must be ordered separately.

P01-48x360F/260x260-EX-E

Max. Stroke: 260 mm
Peak Force: 721 N

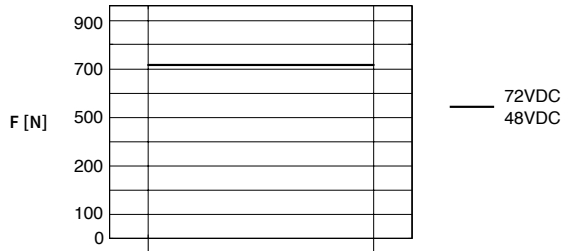

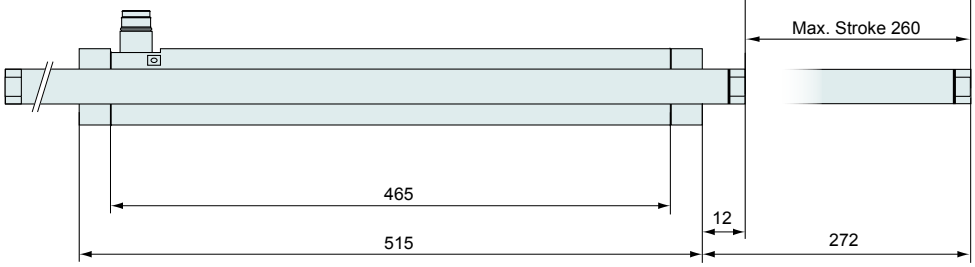

Dimensions in mm

Technical Data P01-48x360F/260x260-EX-E				
Stroke				
Max. Stroke	mm	(in)	260	(10.19)
Force				
Max. Force @ 48VDC	N	(lbf)	721	(162)
Max. Force @ 72VDC	N	(lbf)	721	(162)
Max. Cont. Force [Passive cooling/ Fan / Fluid]	N	(lbf)	130 / - / 350	(29 / - / 80)
Max. Border Force relative	%		100	
Force Constant	N/A_{pk}	(lbf/A_{pk})	27.7	(6.24)
Velocity				
Max. Velocity @ 48VDC	m/s	(in/s)	1.6	(62.9)
Max. Velocity @ 72VDC	m/s	(in/s)	2.3	(93.9)
Position Detection				
Repeatability	mm	(in)	±0.05	(±0.002)
Linearity	%		± 0.4	
Electrical Data				
Max. Current @ 48VDC	A_{pk}		25.9	
Max. Current @ 72VDC	A_{pk}		25.9	
Max. Cont. Current [Passive cooling /Fan / Fluid]	A_{pk}		4.6 / - / 13	
Thermal Data				
Max. Winding Temperature (Sensor)	°C		90	
Thermal Resistance [Passive cooling / Fan / Fluid]	°K/W		1.3 / - / 0.17	
Thermal Time Constant [Passive cooling / Fan / Fluid]	s		1900 / - / 240	
Mechanical Data				
Slider Length	mm	(in)	800	(31)
Slider Mass	g	(lb)	3310	(7.28)

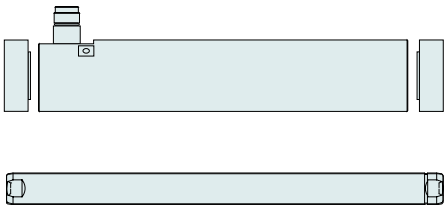

Item	Description	Item-No.
PS01-48x360F-EX-E	Stator EX, IP67	0150-2545
PS01-48x360F-EX-E-FC	Stator EX, IP67, FC	0150-1300
PB01-48x25-80-P-SSC*	Lager for PS01-48x360-SSC / EX	0150-3413
PL01-27x800/720	Slider 'High Clearance'	0150-1472

* 2 Bearing kits must be ordered separately.

P01-48x360F/380x380-EX-E

Max. Stroke: 380 mm
Peak Force: 721 N

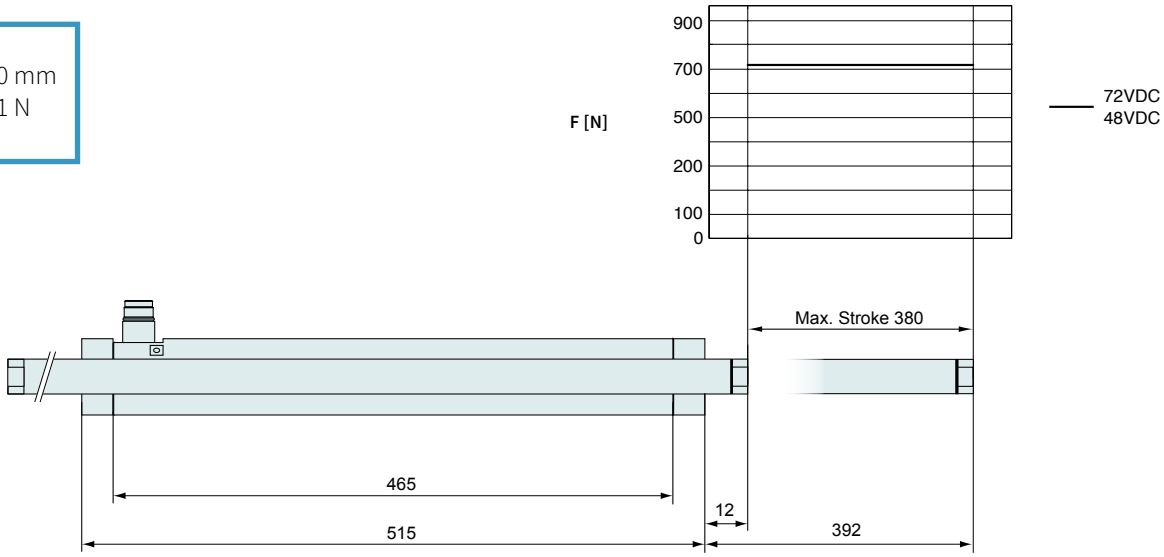

Dimensions in mm

Technical Data P01-48x360F/380x380-EX-E				
Stroke				
Max. Stroke	mm	(in)	380	(14.99)
Force				
Max. Force @ 48VDC	N	(lbf)	721	(162)
Max. Force @ 72VDC	N	(lbf)	721	(162)
Max. Cont. Force [Passive cooling/ Fan / Fluid]	N	(lbf)	130 / - / 350	(29 / - / 80)
Max. Border Force relative	%		100	
Force Constant	N/A_{pk}	(lbf/A_{pk})	27.7	(6.24)
Velocity				
Max. Velocity @ 48VDC	m/s	(in/s)	1.6	(62.9)
Max. Velocity @ 72VDC	m/s	(in/s)	2.3	(93.9)
Position Detection				
Repeatability	mm	(in)	±0.05	(±0.002)
Linearity	%		± 0.3	
Electrical Data				
Max. Current @ 48VDC	A_{pk}		25.9	
Max. Current @ 72VDC	A_{pk}		25.9	
Max. Cont. Current [Passive cooling /Fan / Fluid]	A_{pk}		4.6 / - / 13	
Thermal Data				
Max. Winding Temperature (Sensor)	°C		90	
Thermal Resistance [Passive cooling / Fan / Fluid]	°K/W		1.3 / - / 0.17	
Thermal Time Constant [Passive cooling / Fan / Fluid]	s		1900 / - / 240	
Mechanical Data				
Slider Length	mm	(in)	920	(36)
Slider Mass	g	(lb)	3830	(8.43)

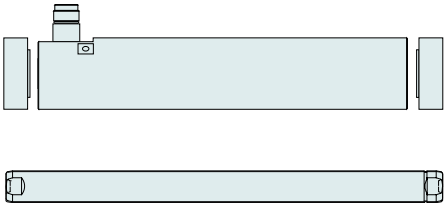

Item	Description	Item-No.
PS01-48x360F-EX-E	Stator EX, IP67	0150-2545
PS01-48x360F-EX-E-FC	Stator EX, IP67, FC	0150-1300
PB01-48x25-80-P-SSC*	Lager for PS01-48x360-SSC / EX	0150-3413
PL01-27x920/840	Slider 'High Clearance'	0150-1447

* 2 Bearing kits must be ordered separately.

P01-48x360F/470x470-EX-E

Max. Stroke: 470 mm
Peak Force: 721 N

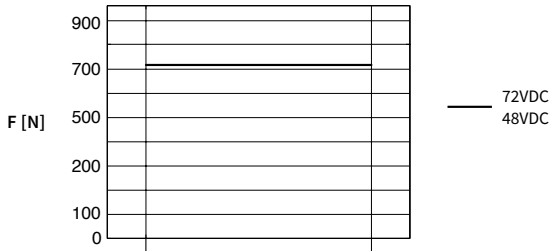

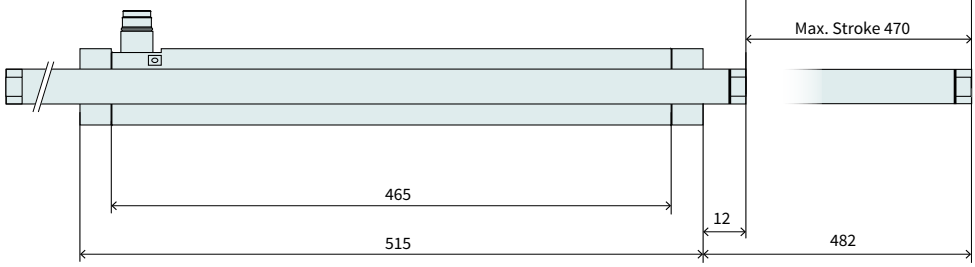

Dimensions in mm

Technical Data P01-48x360F/470x470-EX-E				
Stroke				
Max. Stroke	mm	(in)	470	(18.49)
Force				
Max. Force @ 48VDC	N	(lbf)	721	(162)
Max. Force @ 72VDC	N	(lbf)	721	(162)
Max. Cont. Force [Passive cooling/ Fan / Fluid]	N	(lbf)	130 / - / 350	(29 / - / 80)
Max. Border Force relative	%		100	
Force Constant	N/A_{pk}	(lbf/A_{pk})	27.7	(6.24)
Velocity				
Max. Velocity @ 48VDC	m/s	(in/s)	1.6	(62.9)
Max. Velocity @ 72VDC	m/s	(in/s)	2.3	(93.9)
Position Detection				
Repeatability	mm	(in)	±0.05	(±0.002)
Linearity	%		± 0.25	
Electrical Data				
Max. Current @ 48VDC	A_{pk}		25.9	
Max. Current @ 72VDC	A_{pk}		25.9	
Max. Cont. Current [Passive cooling /Fan / Fluid]	A_{pk}		4.6 / - / 13	
Thermal Data				
Max. Winding Temperature (Sensor)	°C		90	
Thermal Resistance [Passive cooling / Fan / Fluid]	°K/W		1.3 / - / 0.17	
Thermal Time Constant [Passive cooling / Fan / Fluid]	s		1900 / - / 240	
Mechanical Data				
Slider Length	mm	(in)	1010	(40)
Slider Mass	g	(lb)	4220	(9.28)

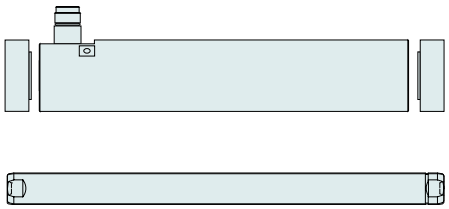

Item	Description	Item-No.
PS01-48x360F-EX-E	Stator EX, IP67	0150-2545
PS01-48x360F-EX-E-FC	Stator EX, IP67, FC	0150-1300
PB01-48x25-80-P-SSC*	Lager for PS01-48x360-SSC / EX	0150-3413
PL01-27x1010/930	Slider 'High Clearance'	0150-1473

* 2 Bearing kits must be ordered separately.

P01-48x360F/680x680-EX-E

Max. Stroke: 680 mm
Peak Force: 721 N

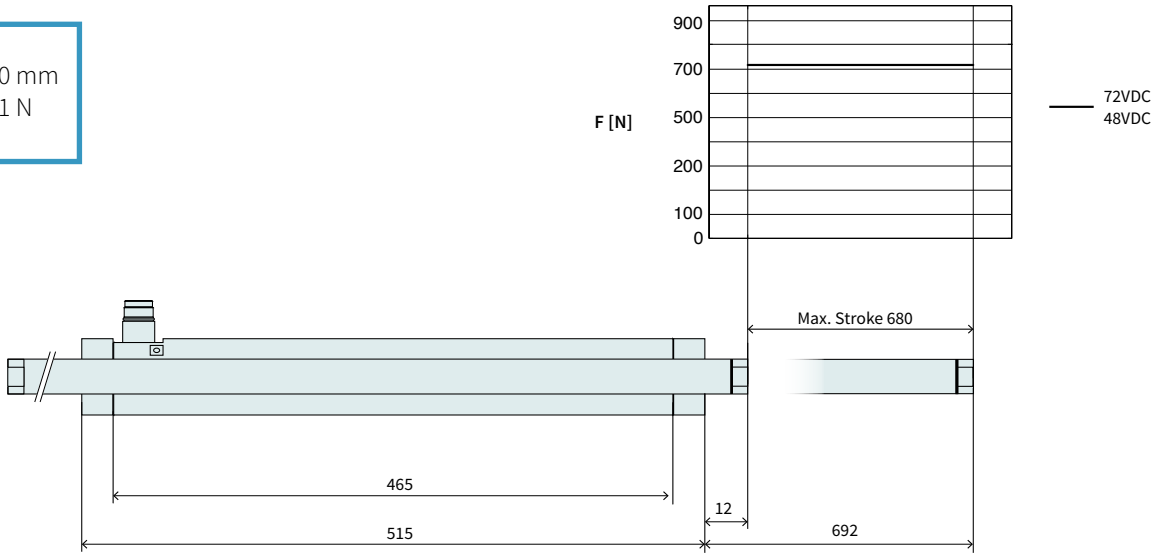

Dimensions in mm

Technical Data P01-48x360F/680x680-EX-E				
Stroke				
Max. Stroke	mm	(in)	680	(26.8)
Force				
Max. Force @ 48VDC	N	(lbf)	721	(162)
Max. Force @ 72VDC	N	(lbf)	721	(162)
Max. Cont. Force [Passive cooling/ Fan / Fluid]	N	(lbf)	130 / - / 350	(29 / - / 80)
Max. Border Force relative	%		100	
Force Constant	N/A_{pk}	(lbf/A_{pk})	27.7	(6.24)
Velocity				
Max. Velocity @ 48VDC	m/s	(in/s)	1.6	(62.9)
Max. Velocity @ 72VDC	m/s	(in/s)	2.3	(93.9)
Position Detection				
Repeatability	mm	(in)	±0.05	(±0.002)
Linearity	%		± 0.2	
Electrical Data				
Max. Current @ 48VDC	A_{pk}		25.9	
Max. Current @ 72VDC	A_{pk}		25.9	
Max. Cont. Current [Passive cooling /Fan / Fluid]	A_{pk}		4.6 / - / 13	
Thermal Data				
Max. Winding Temperature (Sensor)	°C		90	
Thermal Resistance [Passive cooling / Fan / Fluid]	°K/W		1.3 / - / 0.17	
Thermal Time Constant [Passive cooling / Fan / Fluid]	s		1900 / - / 240	
Mechanical Data				
Slider Length	mm	(in)	1220	(48)
Slider Mass	g	(lb)	5130	(11.29)

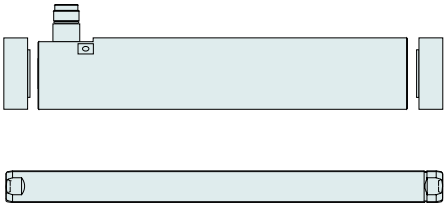

Item	Description	Item-No.
PS01-48x360F-EX-E	Stator EX, IP67	0150-2545
PS01-48x360F-EX-E-FC	Stator EX, IP67, FC	0150-1300
PB01-48x25-80-P-SSC*	Lager for PS01-48x360-SSC / EX	0150-3413
PL01-27x1220/1140	Slider 'High Clearance'	0150-1587

* 2 Bearing kits must be ordered separately.

P01-48x360F/860x860-EX-E

Max. Stroke: 860 mm
Peak Force: 721 N

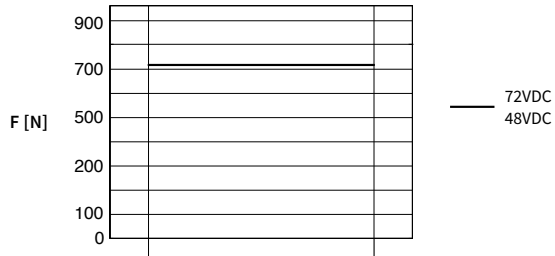

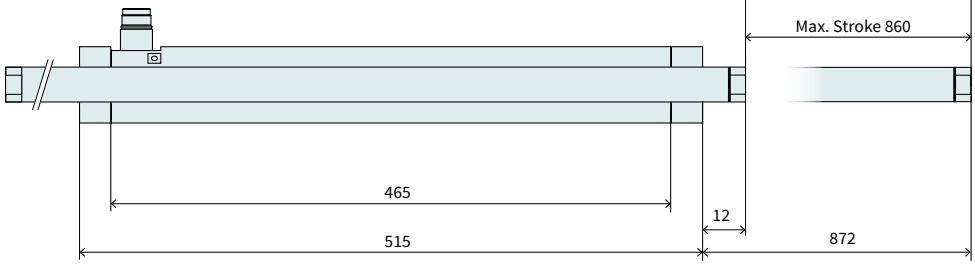

Dimensions in mm

Technical Data P01-48x360F/860x860-EX-E				
Stroke				
Max. Stroke	mm	(in)	860	(33.89)
Force				
Max. Force @ 48VDC	N	(lbf)	721	(162)
Max. Force @ 72VDC	N	(lbf)	721	(162)
Max. Cont. Force [Passive cooling/ Fan / Fluid]	N	(lbf)	130 / - / 350	(29 / - / 80)
Max. Border Force relative	%		100	
Force Constant	N/A_{pk}	(lbf/A_{pk})	27.7	(6.24)
Velocity				
Max. Velocity @ 48VDC	m/s	(in/s)	1.6	(62.9)
Max. Velocity @ 72VDC	m/s	(in/s)	2.3	(93.9)
Position Detection				
Repeatability	mm	(in)	±0.05	(±0.002)
Linearity	%		± 0.2	
Electrical Data				
Max. Current @ 48VDC	A_{pk}		25.9	
Max. Current @ 72VDC	A_{pk}		25.9	
Max. Cont. Current [Passive cooling /Fan / Fluid]	A_{pk}		4.6 / - / 13	
Thermal Data				
Max. Winding Temperature (Sensor)	°C		90	
Thermal Resistance [Passive cooling / Fan / Fluid]	°K/W		1.3 / - / 0.17	
Thermal Time Constant [Passive cooling / Fan / Fluid]	s		1900 / - / 240	
Mechanical Data				
Slider Length	mm	(in)	1400	(55)
Slider Mass	g	(lb)	5910	(13)

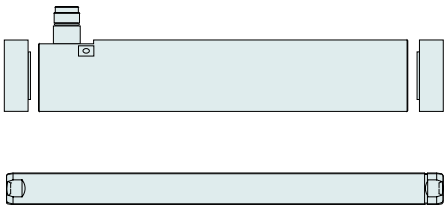

Item	Description	Item-No.
PS01-48x360F-EX-E	Stator EX, IP67	0150-2545
PS01-48x360F-EX-E-FC	Stator EX, IP67, FC	0150-1300
PB01-48x25-80-P-SSC*	Lager for PS01-48x360-SSC / EX	0150-3413
PL01-27x1400/1320	Slider 'High Clearance'	0150-1588

* 2 Bearing kits must be ordered separately.

Motor Cable

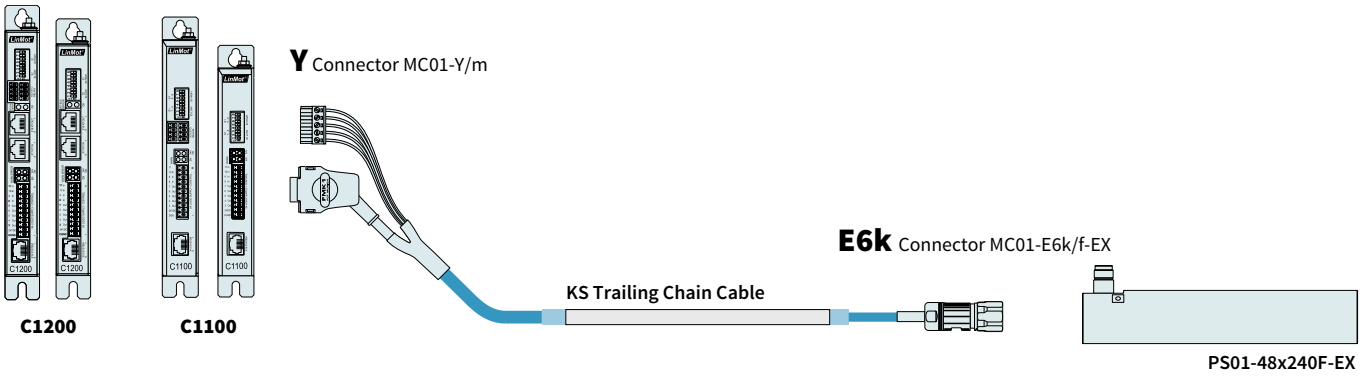

ORDERING INFORMATION

TRAILING CHAIN CABLE		
Item	**Description**	**Item-No.**
KS10-EX-Y-Fe/E6k-	Trailing Chain Cable KS10-EX-Y-Fe/E6k-, Custom length	0150-3642

CONNECTOR & CABLE (INDIVIDUAL)		
Item	**Description**	**Item-No.**
MC01-Y-Fe/m	Motor Connector Y-Fe/m	0150-3289
MC01-E6k/f-EX	Connerctor with hexagonal union nut	0150-3538
KS10-05/05/04-EX	Motor cable for EX applications per m	0150-9010

SLIDER MOUNTING





Item	Description	Item-No.
PLF01-28-SS	Fixed Bearing Set for 27/28 mm sliders, stainless steel	0150-3297
PLL01-27	Floating Bearing for 27 mm sliders	0150-3294

FIND MORE PRODUCT DETAILS IN THE CHAPTER „ACCESSORIES“.

BEARING KIT



Item	Description	Item-No.
PB01-48x25-80-P-SSC	Lager for PS01-48x360-SSC (Edelstahl)	0150-3413

FIND MORE PRODUCT DETAILS IN THE CHAPTER „ACCESSORIES“.

LINEAR MOTORS PD03-37Sx120F-HP



- High-performance linear motor with integrated drive
- Compact form factor
- Highly dynamic
- Suitable for daisy-chain linkages
- Integrated mounting flange
- Low cabling effort

LINEAR MOTORS PD03-37Sx120F-HP

Technical Data ____ **710**

Motor Specifications

PD03-37Sx120F/40-HP **713**

PD03-37Sx120F/100-HP **714**

PD03-37Sx120F/160-HP **715**

PD03-37Sx120F/200-HP **716**

PD03-37Sx120F/300-HP **717**

PD03-37Sx120F/400-HP **718**

Accessories ____ **719**

Product Description

The PD03 drive unit consists of a compact linear motor and an integrated drive. This innovative concept will allow the controller to be eliminated from the electrical enclosure for linear direct drives, thus greatly reducing installation time and effort.

In addition, this opens up the possibility to efficiently couple several devices in a daisy chain linkage. This new generation of motors can be used to implement modular machine concepts easily.



TUBULAR LINEAR MOTOR

Inside the PD03 is a series 37Sx120F-HP linear motor. This short style motor can produce a peak force 255 N and peak speed of 3.8 m/s. Together with the high-resolution slider program, the stroke range is up to 1480 mm.

Like all LinMot motors, this model can also be positioned freely and has high process stability and long service life, with no wear components.



INTEGRATED DRIVE

The drive supplies the motor with a peak phase current of up to 25 A and has an industrial Ethernet interface. EtherCAT, ProfiNet, Ethernet IP, Sercos III, and Powerlink are available. Device profiles CoE, CiA402, SoE, and PROFIdrive are also supported. The RS232 configuration interface and the DIP switch are installed behind a protective cover, which guarantees that leak tightness requirements are met. The complete motor with integrated drive thus meets protection class IP 65 to prevent dust and water spray infiltration.



MOTOR FAMILY PD03-37Sx120F-HP

Technical Data				
Stroke				
Max. Stroke	mm	(in)	400	(15.75)
Force				
Max. Force @ 48VDC	N	(lbf)	255	(57.3)
Max. Force @ 72VDC	N	(lbf)	255	(57.3)
Max. Cont. Force [Passive cooling/ Fan / Fluid]	N	(lbf)	48 / - / -	(11 / - / -)
Force Constant	N/A_{pk}	(lbf/A_{pk})	17	(3.82)
Velocity				
Max. Velocity @ 48VDC	m/s	(in/s)	2.5	(99.9)
Max. Velocity @ 72VDC	m/s	(in/s)	3.8	(149.9)
Position Detection				
Position Resolution	mm	(in)	0.005	(0.0002)
Repeatability	mm	(in)	±0.05	(±0.002)
Electrical Data				
Max. Current @ 48VDC	A_{pk}		14.9	
Max. Current @ 72VDC	A_{pk}		14.9	
Max. Cont. Current [Passive cooling /Fan / Fluid]	A_{pk}		2.8 / - / -	
Terminal Resistance 25 °C / 150 °C	Ohm		2.4 / 3.5	
Terminal Inductivity	mH		1.6	
Magnetic Period	mm	(in)	40	(1.57)
Thermal Data				
Max. Winding Temperature (Sensor)	°C		120	
Thermal Resistance [Passive cooling / Fan / Fluid]	°K/W		2.9 / - / -	
Thermal Time Constant [Passive cooling / Fan / Fluid]	s		1200 / - / -	
Mechanical Data				
Stator Width	mm	(in)	42	(1.65)
Stator Height	mm	(in)	145	(5.71)
Stator Length	mm	(in)	170	(6.7)
Stator Mass	g	(lb)	1900	(4.18)
Slider Diameter	mm	(in)	20	(0.79)
Slider Length	mm	(in)	240 - 600	(9.4 - 24)
Slider Mass	g	(lb)	490 - 1330	(0.88 - 2.4)
IP Code			IP 65	
Integrated Servo Drive				
Nominal Voltage Power	VDC		72 (24 -85)	
Nominal Voltage Signal	VDC		24 (22 -26)	
Nominal Current Signal	mA		150	
Internal Fuse Signal			Sicherung 3 A-T	
Field Bus			EtherCAT	
Configuration Interface			RS232	

STATOR

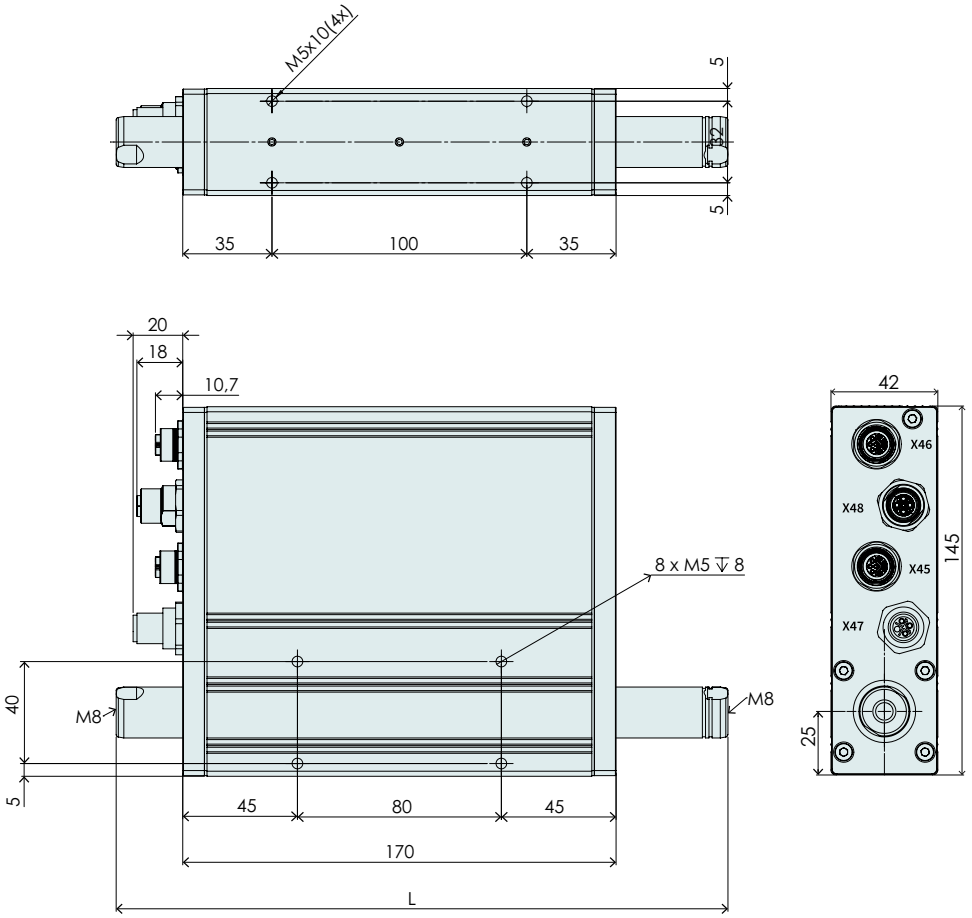

Item	Description	Item-No.
PSD03-37Sx120F-HP-I1150-EC-XC-0S-000	Stator with EtherCAT Drive (72V/15A)	0150-2806
PSD03-37Sx120F-HP-I1150-DS-XC-0S-000	Stator with EtherCAT CoE Drive (72V/15A)	0150-2807
PSD03-37Sx120F-HP-I1150-SE-XC-0S-000	Stator with EtherCAT SoE Drive (72V/15A)	0150-2808

SLIDER

Slider HP / Heavy Duty HP

Number of grooves determines the slider type (see chapter 2 / slider) and marks the front end.

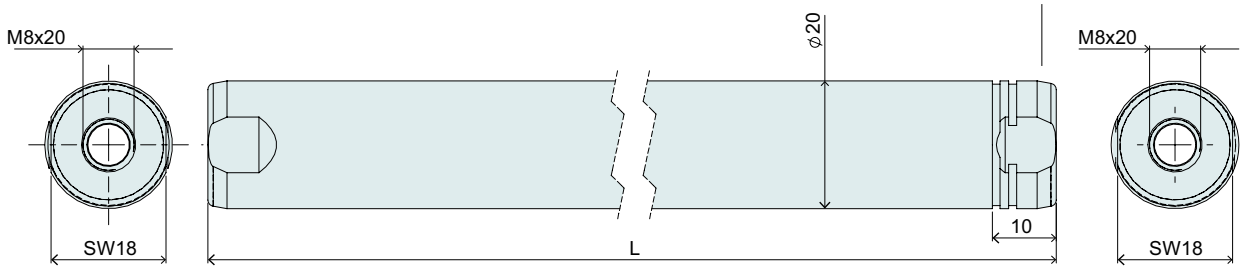

Hollow Slider HP

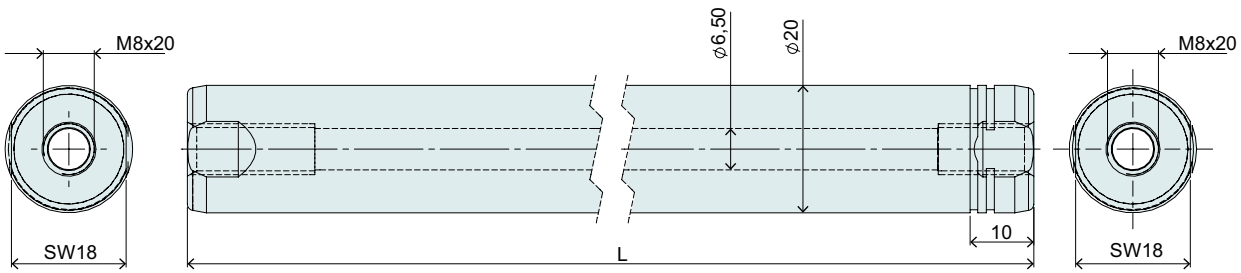

Slider High Performance			
Item	**Description**	**Max. Stroke [mm]**	**Item-No.**
PL01-20x240/180-HP	Slider 'High Performance'	40	0150-1505
PL01-20x300/240-HP	Slider 'High Performance'	100	0150-1506
PL01-20x360/300-HP	Slider 'High Performance'	160	0150-1507
PL01-20x400/340-HP	Slider 'High Performance'	200	0150-1508
PL01-20x500/440-HP	Slider 'High Performance'	300	0150-1509
PL01-20x600/540-HP	Slider 'High Performance'	400	0150-1510

Slider Heavy Duty High Performance			
Item	**Description**	**Max. Stroke [mm]**	**Item-No.**
PL02-20x240/180-HP	Slider 'heavy duty' 'High Performace'	40	0150-2162
PL02-20x300/240-HP	Slider 'heavy duty' 'High Performace'	100	0150-2163
PL02-20x360/300-HP	Slider 'heavy duty' 'High Performace'	160	0150-2164
PL02-20x400/340-HP	Slider 'heavy duty' 'High Performace'	200	0150-2165
PL02-20x500/440-HP	Slider 'heavy duty' 'High Performace'	300	0150-2166
PL02-20x600/540-HP	Slider 'heavy duty' 'High Performace'	400	0150-2167

Hollow Slider High Performance			
Item	**Description**	**Max. Stroke [mm]**	**Item-No.**
PL01-20x240/180-HP-L	Slider 'High Performance L'	40	0150-2540
PL01-20x300/240-HP-L	Slider 'High Performance L'	100	0150-3696
PL01-20x360/300-HP-L	Slider 'High Performance L'	160	0150-1537
PL01-20x400/340-HP-L	Slider 'High Performance L'	200	0150-3697
PL01-20x500/440-HP-L	Slider 'High Performance L'	300	0150-3698
PL01-20x600/540-HP-L	Slider 'High Performance L'	400	0150-3699

PD03-37Sx120F/40-HP

Max. Stroke: 40 mm
Peak Force: 255 N

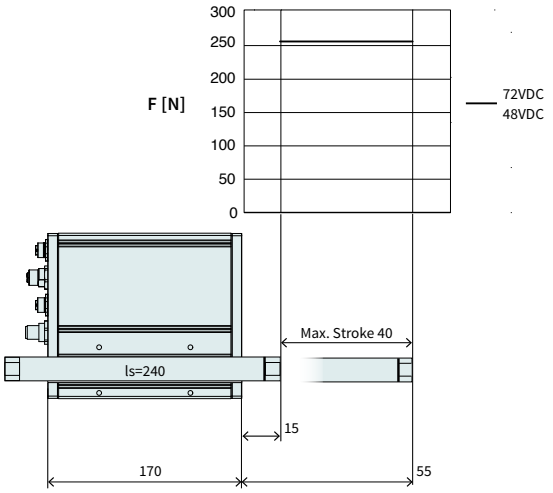

Dimensions in mm

Technical Data PD03-37Sx120F/40-HP				
Stroke				
Max. Stroke	mm	(in)	40	(1.57)
Force				
Max. Force @ 48VDC	N	(lbf)	255	(57.3)
Max. Force @ 72VDC	N	(lbf)	255	(57.3)
Max. Cont. Force [Passive cooling/ Fan / Fluid]	N	(lbf)	48 / - / -	(11 / - / -)
Force Constant	N/A_{pk}	(lbf/A_{pk})	17	(3.82)
Velocity				
Max. Velocity @ 48VDC	m/s	(in/s)	2.5	(99.9)
Max. Velocity @ 72VDC	m/s	(in/s)	3.8	(149.9)
Position Detection				
Repeatability	mm	(in)	±0.05	(±0.002)
Linearity	%		± 0.5	
Electrical Data				
Max. Current @ 48VDC	A_{pk}		14.9	
Max. Current @ 72VDC	A_{pk}		14.9	
Max. Cont. Current [Passive cooling /Fan / Fluid]	A_{pk}		2.8 / - / -	
Thermal Data				
Max. Winding Temperature (Sensor)	°C		120	
Thermal Resistance [Passive cooling / Fan / Fluid]	°K/W		2.9 / - / -	
Thermal Time Constant [Passive cooling / Fan / Fluid]	s		1200 / - / -	
Mechanical Data				
Slider Length	mm	(in)	240	(9.4)
Slider Mass	g	(lb)	490	(1.08)
Integrated Servo Drive				
Nominal Voltage Power	VDC		72 (24 -85)	
Nominal Voltage Signal	VDC		24 (22 -26)	
Nominal Current Signal	mA		150	
Internal Fuse Signal			Sicherung 3 A-T	
Field Bus			EtherCAT	
Configuration Interface			RS232	

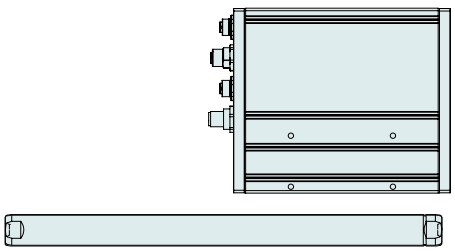

Item	Description	Item-No.
PSD03-37Sx120F-HP-I1150-EC-XC-0S-000	Stator with EtherCAT Drive (72V/15A)	0150-2806
PSD03-37Sx120F-HP-I1150-DS-XC-0S-000	Stator with EtherCAT CoE Drive (72V/15A)	0150-2807
PSD03-37Sx120F-HP-I1150-SE-XC-0S-000	Stator with EtherCAT SoE Drive (72V/15A)	0150-2808
PL01-20x240/180-HP	Slider 'High Performance'	0150-1505
PL02-20x240/180-HP	Slider 'heavy duty' 'High Performace'	0150-2162
PL01-20x240/180-HP-L*	Slider 'High Performance L'	0150-2540

*With this slider, the motor specifications above change.

PD03-37Sx120F/100-HP

Max. Stroke: 100 mm
Peak Force: 255 N

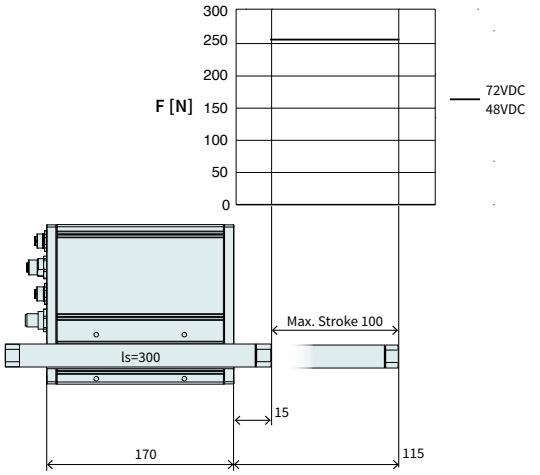

Dimensions in mm

7

Technical Data PD03-37Sx120F/100-HP				
Stroke				
Max. Stroke	mm	(in)	100	(3.93)
Force				
Max. Force @ 48VDC	N	(lbf)	255	(57.3)
Max. Force @ 72VDC	N	(lbf)	255	(57.3)
Max. Cont. Force [Passive cooling/ Fan / Fluid]	N	(lbf)	48 / - / -	(11 / - / -)
Force Constant	N/A_{pk}	(lbf/A_{pk})	17	(3.82)
Velocity				
Max. Velocity @ 48VDC	m/s	(in/s)	2.5	(99.9)
Max. Velocity @ 72VDC	m/s	(in/s)	3.8	(149.9)
Position Detection				
Repeatability	mm	(in)	±0.05	(±0.002)
Linearity	%		± 0.4	
Electrical Data				
Max. Current @ 48VDC	A_{pk}		14.9	
Max. Current @ 72VDC	A_{pk}		14.9	
Max. Cont. Current [Passive cooling /Fan / Fluid]	A_{pk}		2.8 / - / -	
Thermal Data				
Max. Winding Temperature (Sensor)	°C		120	
Thermal Resistance [Passive cooling / Fan / Fluid]	°K/W		2.9 / - / -	
Thermal Time Constant [Passive cooling / Fan / Fluid]	s		1200 / - / -	
Mechanical Data				
Slider Length	mm	(in)	300	(12)
Slider Mass	g	(lb)	630	(1.39)
Integrated Servo Drive				
Nominal Voltage Power	VDC		72 (24 -85)	
Nominal Voltage Signal	VDC		24 (22 -26)	
Nominal Current Signal	mA		150	
Internal Fuse Signal			Sicherung 3 A-T	
Field Bus			EtherCAT	
Configuration Interface			RS232	

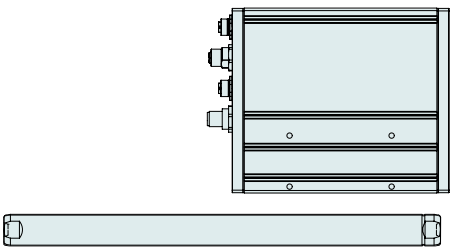

Item	Description	Item-No.
PSD03-37Sx120F-HP-I1150-EC-XC-0S-000	Stator with EtherCAT Drive (72V/15A)	0150-2806
PSD03-37Sx120F-HP-I1150-DS-XC-0S-000	Stator with EtherCAT CoE Drive (72V/15A)	0150-2807
PSD03-37Sx120F-HP-I1150-SE-XC-0S-000	Stator with EtherCAT SoE Drive (72V/15A)	0150-2808
PL01-20x300/240-HP	Slider 'High Performance'	0150-1506
PL02-20x300/240-HP	Slider 'heavy duty' 'High Performace'	0150-2163
PL01-20x300/240-HP-L*	Slider 'High Performance L'	0150-3696

* With this slider, the motor specifications above change.

PD03-37Sx120F/160-HP

Max. Stroke: 160 mm
Peak Force: 255 N

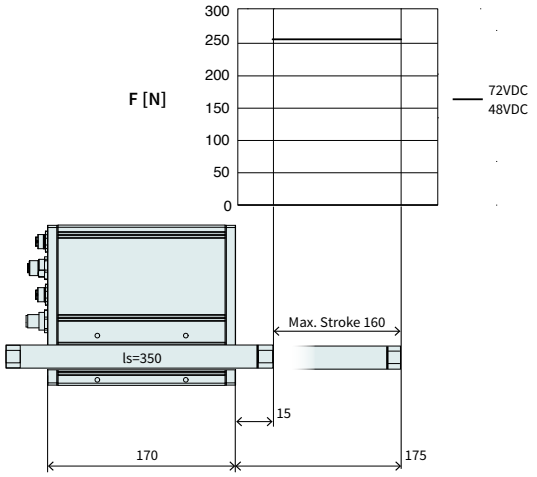

Dimensions in mm

Technical Data PD03-37Sx120F/160-HP				
Stroke				
Max. Stroke	mm	(in)	160	(6.29)
Force				
Max. Force @ 48VDC	N	(lbf)	255	(57.3)
Max. Force @ 72VDC	N	(lbf)	255	(57.3)
Max. Cont. Force [Passive cooling/ Fan / Fluid]	N	(lbf)	48 / - / -	(11 / - / -)
Force Constant	N/A_{pk}	(lbf/A_{pk})	17	(3.82)
Velocity				
Max. Velocity @ 48VDC	m/s	(in/s)	2.5	(99.9)
Max. Velocity @ 72VDC	m/s	(in/s)	3.8	(149.9)
Position Detection				
Repeatability	mm	(in)	±0.05	(±0.002)
Linearity	%		± 0.3	
Electrical Data				
Max. Current @ 48VDC	A_{pk}		14.9	
Max. Current @ 72VDC	A_{pk}		14.9	
Max. Cont. Current [Passive cooling /Fan / Fluid]	A_{pk}		2.8 / - / -	
Thermal Data				
Max. Winding Temperature (Sensor)	°C		120	
Thermal Resistance [Passive cooling / Fan / Fluid]	°K/W		2.9 / - / -	
Thermal Time Constant [Passive cooling / Fan / Fluid]	s		1200 / - / -	
Mechanical Data				
Slider Length	mm	(in)	360	(14)
Slider Mass	g	(lb)	760	(1.67)
Integrated Servo Drive				
Nominal Voltage Power	VDC		72 (24 -85)	
Nominal Voltage Signal	VDC		24 (22 -26)	
Nominal Current Signal	mA		150	
Internal Fuse Signal			Sicherung 3 A-T	
Field Bus			EtherCAT	
Configuration Interface			RS232	

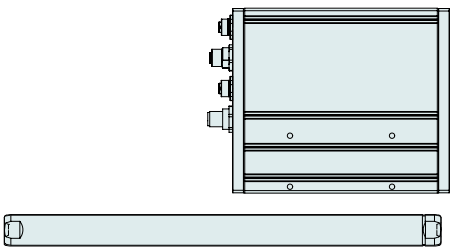

Item	Description	Item-No.
PSD03-37Sx120F-HP-I1150-EC-XC-0S-000	Stator with EtherCAT Drive (72V/15A)	0150-2806
PSD03-37Sx120F-HP-I1150-DS-XC-0S-000	Stator with EtherCAT CoE Drive (72V/15A)	0150-2807
PSD03-37Sx120F-HP-I1150-SE-XC-0S-000	Stator with EtherCAT SoE Drive (72V/15A)	0150-2808
PL01-20x360/300-HP	Slider 'High Performance'	0150-1507
PL02-20x360/300-HP	Slider 'heavy duty' 'High Performace'	0150-2164
PL01-20x360/300-HP-L*	Slider 'High Performance L'	0150-1537

* With this slider, the motor specifications above change.

PD03-37Sx120F/200-HP

Max. Stroke: 200 mm
Peak Force: 255 N

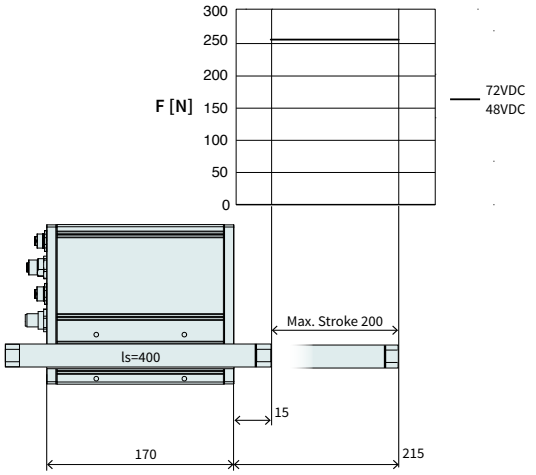

Dimensions in mm

Technical Data PD03-37Sx120F/200-HP				
Stroke				
Max. Stroke	mm	(in)	200	(7.86)
Force				
Max. Force @ 48VDC	N	(lbf)	255	(57.3)
Max. Force @ 72VDC	N	(lbf)	255	(57.3)
Max. Cont. Force [Passive cooling/ Fan / Fluid]	N	(lbf)	48 / - / -	(11 / - / -)
Force Constant	N/A_{pk}	(lbf/A_{pk})	17	(3.82)
Velocity				
Max. Velocity @ 48VDC	m/s	(in/s)	2.5	(99.9)
Max. Velocity @ 72VDC	m/s	(in/s)	3.8	(149.9)
Position Detection				
Repeatability	mm	(in)	±0.05	(±0.002)
Linearity	%		± 0.3	
Electrical Data				
Max. Current @ 48VDC	A_{pk}		14.9	
Max. Current @ 72VDC	A_{pk}		14.9	
Max. Cont. Current [Passive cooling /Fan / Fluid]	A_{pk}		2.8 / - / -	
Thermal Data				
Max. Winding Temperature (Sensor)	°C		120	
Thermal Resistance [Passive cooling / Fan / Fluid]	°K/W		2.9 / - / -	
Thermal Time Constant [Passive cooling / Fan / Fluid]	s		1200 / - / -	
Mechanical Data				
Slider Length	mm	(in)	400	(16)
Slider Mass	g	(lb)	860	(1.9)
Integrated Servo Drive				
Nominal Voltage Power	VDC		72 (24 -85)	
Nominal Voltage Signal	VDC		24 (22 -26)	
Nominal Current Signal	mA		150	
Internal Fuse Signal			Sicherung 3 A-T	
Field Bus			EtherCAT	
Configuration Interface			RS232	

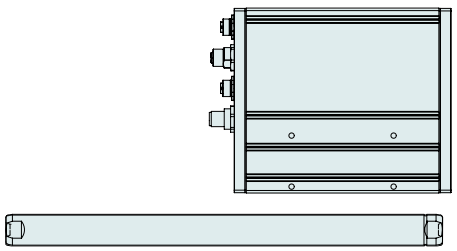

Item	Description	Item-No.
PSD03-37Sx120F-HP-I1150-EC-XC-0S-000	Stator with EtherCAT Drive (72V/15A)	0150-2806
PSD03-37Sx120F-HP-I1150-DS-XC-0S-000	Stator with EtherCAT CoE Drive (72V/15A)	0150-2807
PSD03-37Sx120F-HP-I1150-SE-XC-0S-000	Stator with EtherCAT SoE Drive (72V/15A)	0150-2808
PL01-20x400/340-HP	Slider 'High Performance'	0150-1508
PL02-20x400/340-HP	Slider 'heavy duty' 'High Performace'	0150-2165
PL01-20x400/340-HP-L*	Slider 'High Performance L'	0150-3697

* With this slider, the motor specifications above change.

PD03-37Sx120F/300-HP

Max. Stroke: 300 mm
Peak Force: 255 N

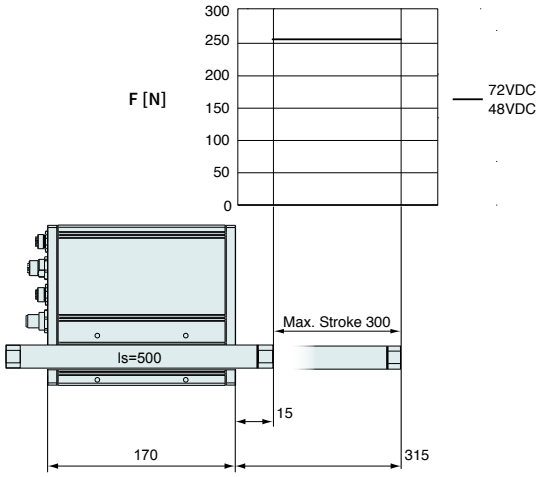

Dimensions in mm

Technical Data PD03-37Sx120F/300-HP				
Stroke				
Max. Stroke	mm	(in)	300	(11.8)
Force				
Max. Force @ 48VDC	N	(lbf)	255	(57.3)
Max. Force @ 72VDC	N	(lbf)	255	(57.3)
Max. Cont. Force [Passive cooling/ Fan / Fluid]	N	(lbf)	48 / - / -	(11 / - / -)
Force Constant	N/A_{pk}	(lbf/A_{pk})	17	(3.82)
Velocity				
Max. Velocity @ 48VDC	m/s	(in/s)	2.5	(99.9)
Max. Velocity @ 72VDC	m/s	(in/s)	3.8	(149.9)
Position Detection				
Repeatability	mm	(in)	±0.05	(±0.002)
Linearity	%		± 0.25	
Electrical Data				
Max. Current @ 48VDC	A_{pk}		14.9	
Max. Current @ 72VDC	A_{pk}		14.9	
Max. Cont. Current [Passive cooling /Fan / Fluid]	A_{pk}		2.8 / - / -	
Thermal Data				
Max. Winding Temperature (Sensor)	°C		120	
Thermal Resistance [Passive cooling / Fan / Fluid]	°K/W		2.9 / - / -	
Thermal Time Constant [Passive cooling / Fan / Fluid]	s		1200 / - / -	
Mechanical Data				
Slider Length	mm	(in)	500	(20)
Slider Mass	g	(lb)	1090	(2.4)
Integrated Servo Drive				
Nominal Voltage Power	VDC		72 (24 -85)	
Nominal Voltage Signal	VDC		24 (22 -26)	
Nominal Current Signal	mA		150	
Internal Fuse Signal			Sicherung 3 A-T	
Field Bus			EtherCAT	
Configuration Interface			RS232	

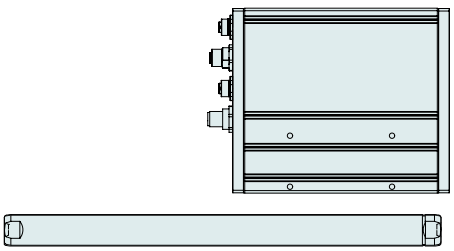

Item	Description	Item-No.
PSD03-37Sx120F-HP-I1150-EC-XC-0S-000	Stator with EtherCAT Drive (72V/15A)	0150-2806
PSD03-37Sx120F-HP-I1150-DS-XC-0S-000	Stator with EtherCAT CoE Drive (72V/15A)	0150-2807
PSD03-37Sx120F-HP-I1150-SE-XC-0S-000	Stator with EtherCAT SoE Drive (72V/15A)	0150-2808
PL01-20x500/440-HP	Slider 'High Performance'	0150-1509
PL02-20x500/440-HP	Slider 'heavy duty' 'High Performace'	0150-2166
PL01-20x500/440-HP-L*	Slider 'High Performance L'	0150-3698

* With this slider, the motor specifications above change.

PD03-37Sx120F/400-HP

Max. Stroke: 400 mm
Peak Force: 255 N

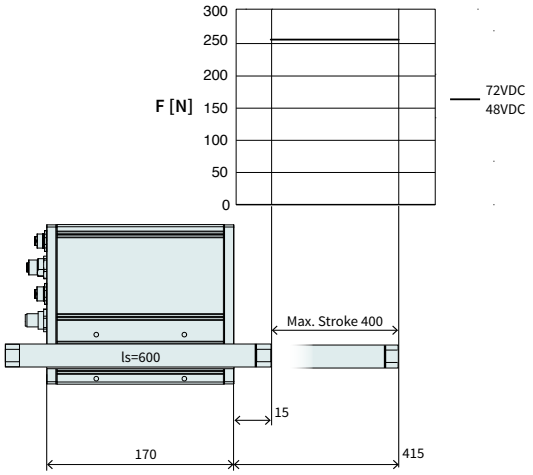

Dimensions in mm

7

Technical Data PD03-37Sx120F/400-HP				
Stroke				
Max. Stroke	mm	(in)	400	(15.69)
Force				
Max. Force @ 48VDC	N	(lbf)	255	(57.3)
Max. Force @ 72VDC	N	(lbf)	255	(57.3)
Max. Cont. Force [Passive cooling/ Fan / Fluid]	N	(lbf)	48 / - / -	(11 / - / -)
Force Constant	N/A_{pk}	(lbf/A_{pk})	17	(3.82)
Velocity				
Max. Velocity @ 48VDC	m/s	(in/s)	2.5	(99.9)
Max. Velocity @ 72VDC	m/s	(in/s)	3.8	(149.9)
Position Detection				
Repeatability	mm	(in)	±0.05	(±0.002)
Linearity	%		± 0.2	
Electrical Data				
Max. Current @ 48VDC	A_{pk}		14.9	
Max. Current @ 72VDC	A_{pk}		14.9	
Max. Cont. Current [Passive cooling /Fan / Fluid]	A_{pk}		2.8 / - / -	
Thermal Data				
Max. Winding Temperature (Sensor)	°C		120	
Thermal Resistance [Passive cooling / Fan / Fluid]	°K/W		2.9 / - / -	
Thermal Time Constant [Passive cooling / Fan / Fluid]	s		1200 / - / -	
Mechanical Data				
Slider Length	mm	(in)	600	(24)
Slider Mass	g	(lb)	1330	(2.93)
Integrated Servo Drive				
Nominal Voltage Power	VDC		72 (24 -85)	
Nominal Voltage Signal	VDC		24 (22 -26)	
Nominal Current Signal	mA		150	
Internal Fuse Signal			Sicherung 3 A-T	
Field Bus			EtherCAT	
Configuration Interface			RS232	

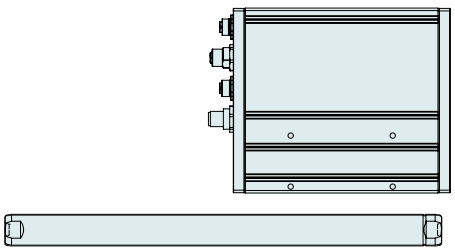

Item	Description	Item-No.
PSD03-37Sx120F-HP-I1150-EC-XC-0S-000	Stator with EtherCAT Drive (72V/15A)	0150-2806
PSD03-37Sx120F-HP-I1150-DS-XC-0S-000	Stator with EtherCAT CoE Drive (72V/15A)	0150-2807
PSD03-37Sx120F-HP-I1150-SE-XC-0S-000	Stator with EtherCAT SoE Drive (72V/15A)	0150-2808
PL01-20x600/540-HP	Slider 'High Performance'	0150-1510
PL02-20x600/540-HP	Slider 'heavy duty' 'High Performace'	0150-2167
PL01-20x600/540-HP-L*	Slider 'High Performance L'	0150-3699

* With this slider, the motor specifications above change.

SLIDER MOUNTING





Item	Description	Item-No.
PLF01-20	Fixed Bearing Set for 19/20 mm sliders	0150-3297
PLF01-20-SS	Fixed Bearing Set for 19/20 mm sliders, stainless steel	0150-3297
PLL01-19	Floating Bearing for 19 mm sliders	0150-3297
PLL01-20	Floating Bearing for 20 mm sliders	0150-3297
PLM01-20-MK	Mounting Kit for 20 mm sliders	0150-3294

FIND MORE PRODUCT DETAILS IN THE CHAPTER „ACCESSORIES“.

LINEAR MOTORS P04



The motor to replace pneumatics.

Product Description

The P04 linear motor has all of the features of the tubular linear motors and has the additional advantage of an integrated guidance. Under the compact aluminum housing is a powerful LinMot PS01-37x120F or PS01-48x240F that drives the precision shaft on bearings. The shaft is guided by a linear ball bearing and has a maximum stroke of 150 mm. With the M10x1.25 thread on the front end, loads can be quickly and easily attached to the shaft. Additional installation options are provided by the profile grooves and T-slots found on every side of the housing.

The ability to move to any position and accelerate up to 50 m/s² means that precision dynamic motions can be implemented for a broad range of applications.



Can be equipped with mechanical accessories for pneumatic systems

The P04 actuator can be equipped with familiar mechanical accessories for pneumatic systems. Several design details on the motor make this possible. The load end of rod has a thread that is identical to ISO 15552 pneumatic cylinders. All mounting elements for pneumatics can be used accordingly. This particularly includes swivel heads and clevis mounts. The PD04 linear motor itself can be mounted like a pneumatic cylinder or by using the T-slots in the housing. All known pivoting and stationary mounting flanges can be used.

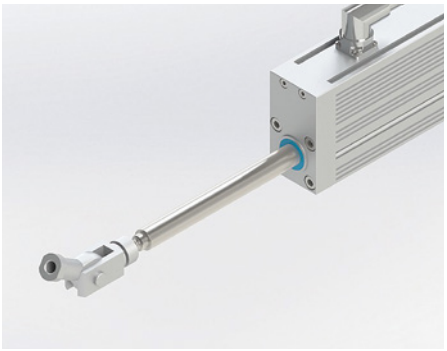

HARDENED SHAFT FOR TRANSVERSE LOADS

The integrated bearing of the PD04 linear motor provides a substantial benefit. The transverse loads that are applied in special applications can be supported.

Simple applications such as ejectors can be implemented in the simplest manner without additional components.



HIGH AND CONTROLLED DYNAMICS

Max. acceleration values over 50 m/s² and travel speeds over 3 m/s allow cyclical motion sequences of several Hertz.

For handling applications with sensitive products, smooth motions with suitable accelerations can be obtained.

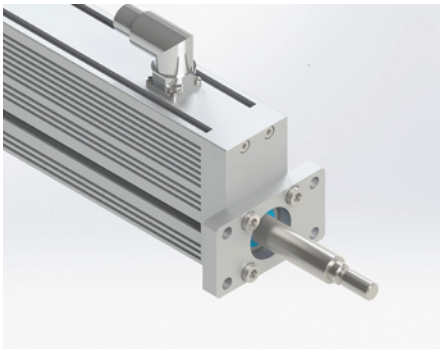

FREELY POSITIONABLE

LinMot linear motors can be freely positioned. With absolute or relative movement commands, they can move to any desired position in the stroke range. Since the LinMot linear drive is a closed-loop system, not only the end positions are monitored, but also deviations in position during travel. This allows, among other things, precise specification of travel speeds, acceleration and braking ramps, and travel through curved paths.

PROCESS STABILITY

For temperature monitoring, all linear motors are equipped with sensors, which transmit the data to the drive. The data can be evaluated in the higher-level control in such a way that the motor can be kept in a constant temperature range.

Since not only the end positions, but also speed and acceleration are controlled and monitored, motions that are programmed once are carried out the same way over the entire life of the machine.

SYNCHRONIZATION

For synchronous machines, the linear motor can be synchronized to the main shaft. By replacing mechanical cam discs with LinMot linear motors, for example, great variations can be achieved, with format changeovers at the push of a button.

OVERLOAD PROTECTION

There are no mechanical components for force transfer that could be damaged in a crash or stall condition in a linear motor. Complex, expensive designs to protect gearboxes, gears, and shafts are thus eliminated. If the linear motor stalls, it acts like a pneumatic cylinder and tries to reach the target position with maximum force. The following error monitor in the drive can, however, immediately recognize a stall condition. Temperature sensors integrated in the stator prevent the drive from overloading in any case.

LONG LIFESPAN

Since the linear motion is generated purely magnetically, and no mechanical force transmission takes place, even extremely dynamic applications can be implemented with a long lifespan.

Type Code

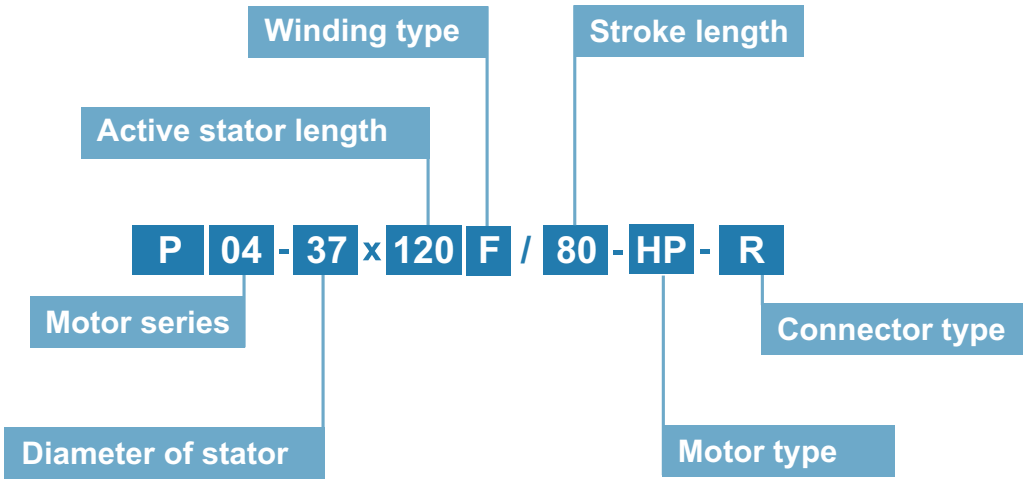

Diameter of the stator which is built into the housing.

For explanations of the terms, please refer to the section "Glossary"

LINEAR MOTORS P04-37x120F-HP



- Peak Force bis for 255 N
- Stroke up to 135 mm
- Hardened rod capable to handle side load
- Mounting connection according to ISO pneumatic cylinder
- Stator encapsulated (IP65)
- Ideal for use in harsh environments

P04-37x120F/80-HP-R

Max. Stroke: 80 mm
Peak Force: 255 N

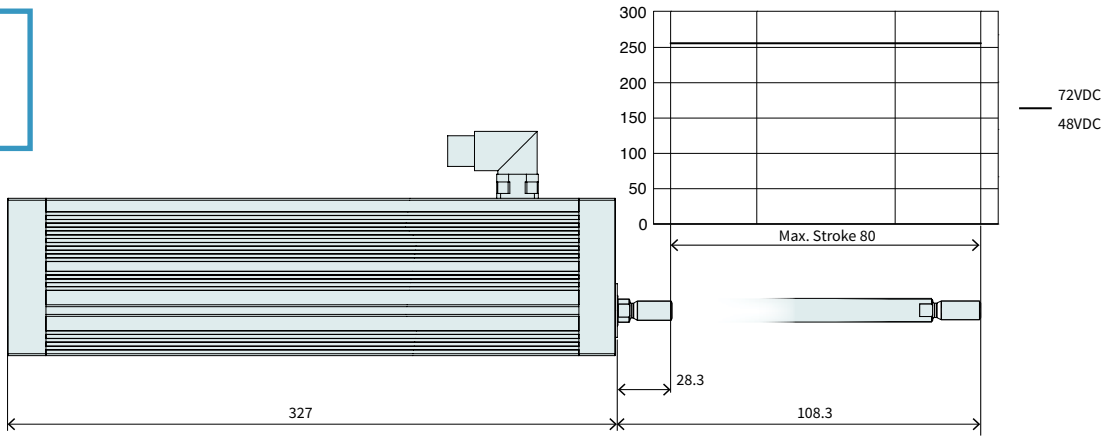

Dimensions in mm

Technical Data P04-37x120F/80-HP				
Stroke				
Max. Stroke	mm	(in)	80	(3.14)
Force				
Max. Force @ 48VDC	N	(lbf)	255	(57.3)
Max. Force @ 72VDC	N	(lbf)	255	(57.3)
Max. Cont. Force [Passive cooling/ Fan / Fluid]	N	(lbf)	63 / 93 / -	(14 / 21 / -)
Force Constant	N/A_{pk}	(lbf/A_{pk})	17	(3.82)
Velocity				
Max. Velocity @ 48VDC	m/s	(in/s)	2.5	(99.9)
Max. Velocity @ 72VDC	m/s	(in/s)	3.8	(149.9)
Position Detection				
Position Resolution	mm	(in)	0.005	(0.0002)
Repeatability	mm	(in)	±0.05	(±0.002)
Linearity	%		± 0.4	
Electrical Data				
Max. Current @ 48VDC	A_{pk}		14.9	
Max. Current @ 72VDC	A_{pk}		14.9	
Max. Cont. Current [Passive cooling /Fan / Fluid]	A_{pk}		3.7 / 5.5/ -	
Terminal Resistance 25 °C / 150 °C	Ohm		2.4 / 3.5	
Terminal Inductivity	mH		1.6	
Magnetic Period	mm	(in)	40	(1.57)
Thermal Data				
Max. Winding Temperature (Sensor)	°C		120	
Thermal Resistance [Passive cooling / Fan / Fluid]	°K/W		1.7 / 0.78 / -	
Thermal Time Constant [Passive cooling / Fan / Fluid]	s		680 / 310 / -	
Mechanical Data				
Stator Width	mm	(in)	45	(1.77)
Stator Height	mm	(in)	82	(3.23)
Stator Length	mm	(in)	327	(12.88)
Stator Mass	g	(lb)	2365	(5.2)
Rod Diameter	mm	(in)	16	(0.63)
Rod Mass	g	(lb)	507	(1.12)
Max. shear force to the rod	N	(lbf)	60	(13.5)
Max. torque to the rod	Nm	(lbfin)	1	(8.93)
IP Code			IP 65	

MOTOR

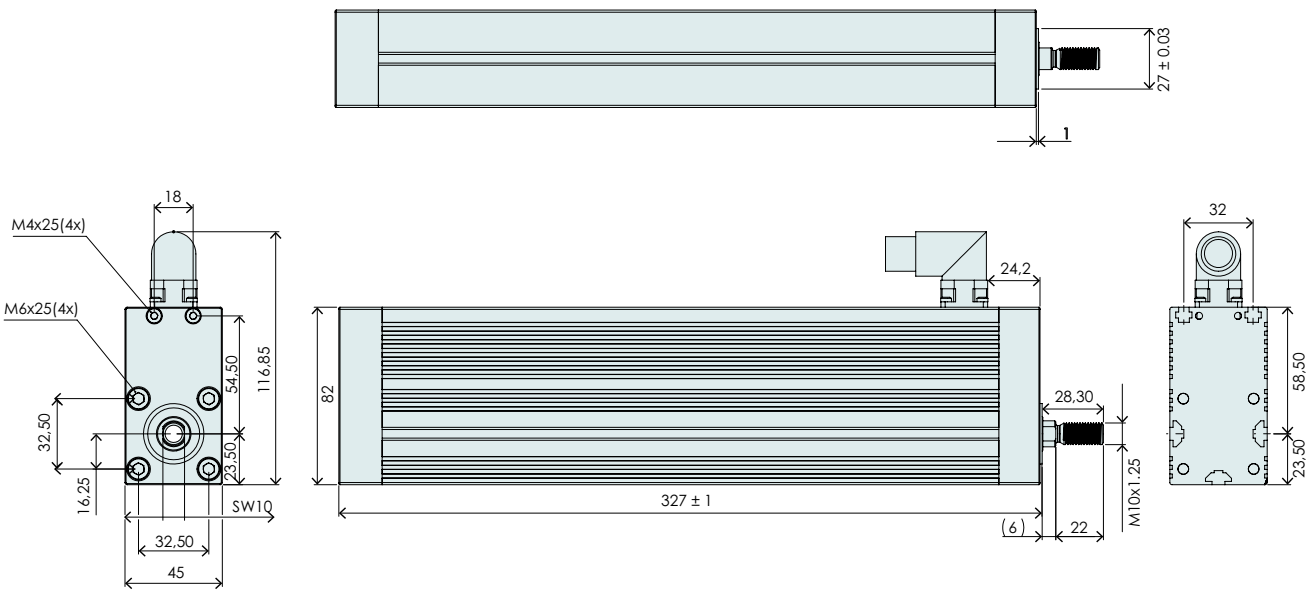

Item	Description	Item-No.
P04-37x120F/80-HP-R	Linear motor P04-37, 80 mm Stroke	0150-2756

CONNECTOR

Motor Connector Wiring	R-Connector	Wire Color Motor Cable
Ph 1+	1	red
Ph 1-	2	pink
Ph 2+	3	blue
Ph 2-	4	grey
+5VDC	A	white
GND	B	Inner Shield
Sinus	C	yellow
Cosinus	D	green
Temp.	E	black
Shield	Case	Outer Shield

R-Connector

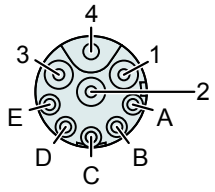

View: Motor connector, plug on

P04-37x120F/135-HP-R

Max. Stroke: 135 mm
Peak Force: 255 N

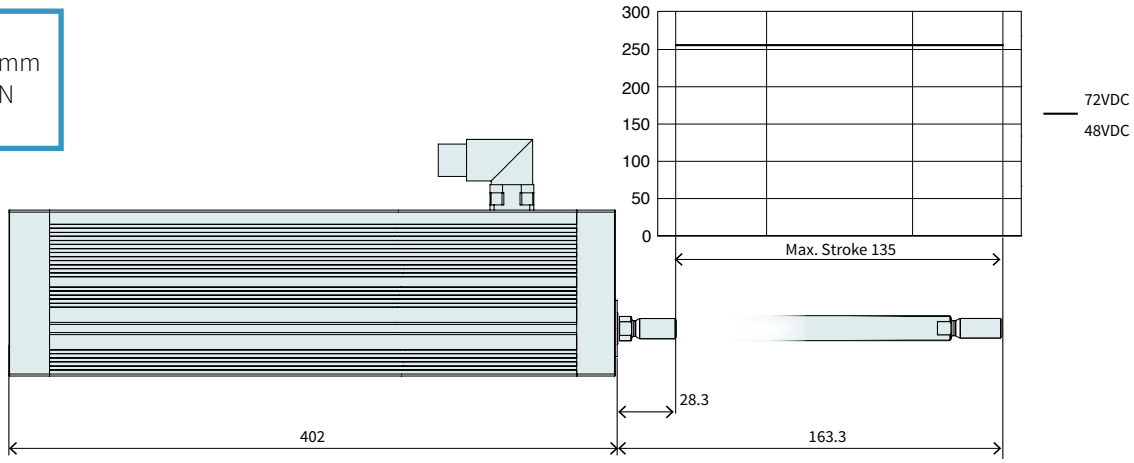

Dimensions in mm

Technical Data P04-37x120F/135-HP-R				
Stroke				
Max. Stroke	mm	(in)	135	(5.3)
Force				
Max. Force @ 48VDC	N	(lbf)	255	(57.3)
Max. Force @ 72VDC	N	(lbf)	255	(57.3)
Max. Cont. Force [Passive cooling/ Fan / Fluid]	N	(lbf)	63 / 93 / -	(14 / 21 / -)
Force Constant	N/A_{pk}	(lbf/A_{pk})	17	(3.82)
Velocity				
Max. Velocity @ 48VDC	m/s	(in/s)	2.5	(99.9)
Max. Velocity @ 72VDC	m/s	(in/s)	3.8	(149.9)
Position Detection				
Position Resolution	mm	(in)	0.005	(0.0002)
Repeatability	mm	(in)	±0.05	(±0.002)
Linearity	%		± 0.4	
Electrical Data				
Max. Current @ 48VDC	A_{pk}		14.9	
Max. Current @ 72VDC	A_{pk}		14.9	
Max. Cont. Current [Passive cooling /Fan / Fluid]	A_{pk}		3.7 / 5.5/ -	
Terminal Resistance 25 °C / 150 °C	Ohm		2.4 / 3.5	
Terminal Inductivity	mH		1.6	
Magnetic Period	mm	(in)	40	(1.57)
Thermal Data				
Max. Winding Temperature (Sensor)	°C		120	
Thermal Resistance [Passive cooling / Fan / Fluid]	°K/W		1.7 / 0.78 / -	
Thermal Time Constant [Passive cooling / Fan / Fluid]	s		680 / 310 / -	
Mechanical Data				
Stator Width	mm	(in)	45	(1.77)
Stator Height	mm	(in)	82	(3.23)
Stator Length	mm	(in)	402	(15.83)
Stator Mass	g	(lb)	2675	(5.89)
Rod Diameter	mm	(in)	16	(0.63)
Rod Mass	g	(lb)	625	(1.38)
Max. shear force to the rod	N	(lbf)	60	(13.5)
Max. torque to the rod	Nm	(lbfin)	1	(8.93)
IP Code			IP 65	

MOTOR

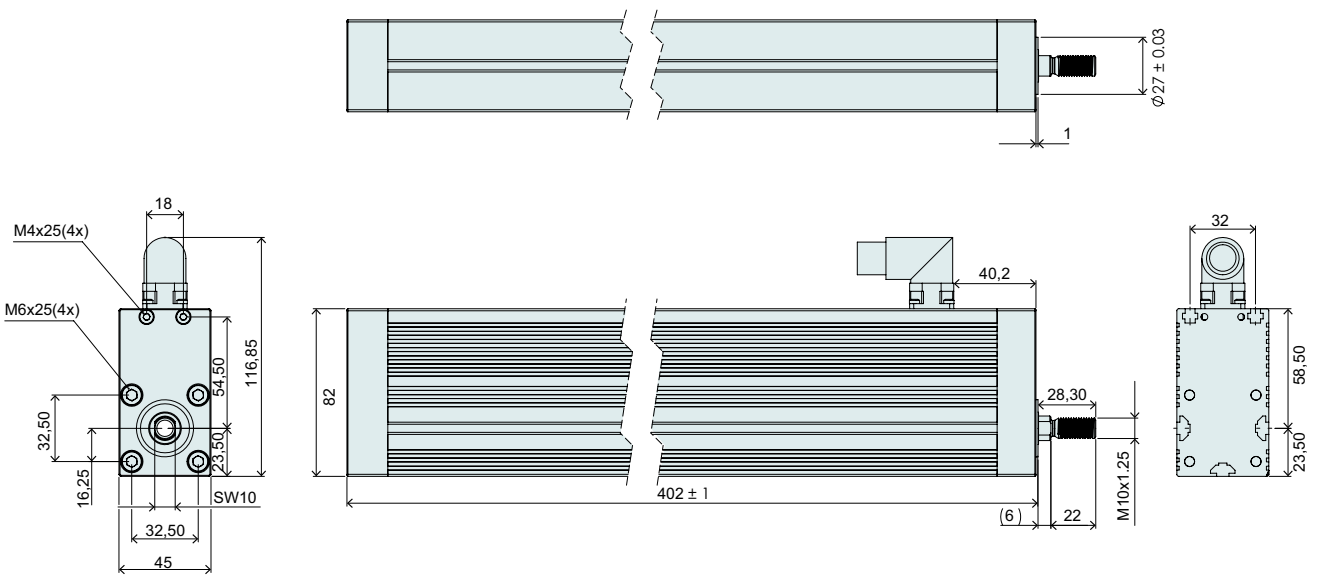

Item	Description	Item-No.
P04-37x120F/135-HP-R	Linear motor P04-37, 135 mm Stroke	0150-2738

CONNECTOR

Motor Connector Wiring	R-Connector	Wire Color Motor Cable
Ph 1+	1	red
Ph 1-	2	pink
Ph 2+	3	blue
Ph 2-	4	grey
+5VDC	A	white
GND	B	Inner Shield
Sinus	C	yellow
Cosinus	D	green
Temp.	E	black
Shield	Case	Outer Shield

R-Connector

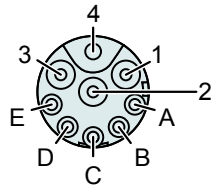

View: Motor connector, plug on

Motor Cable

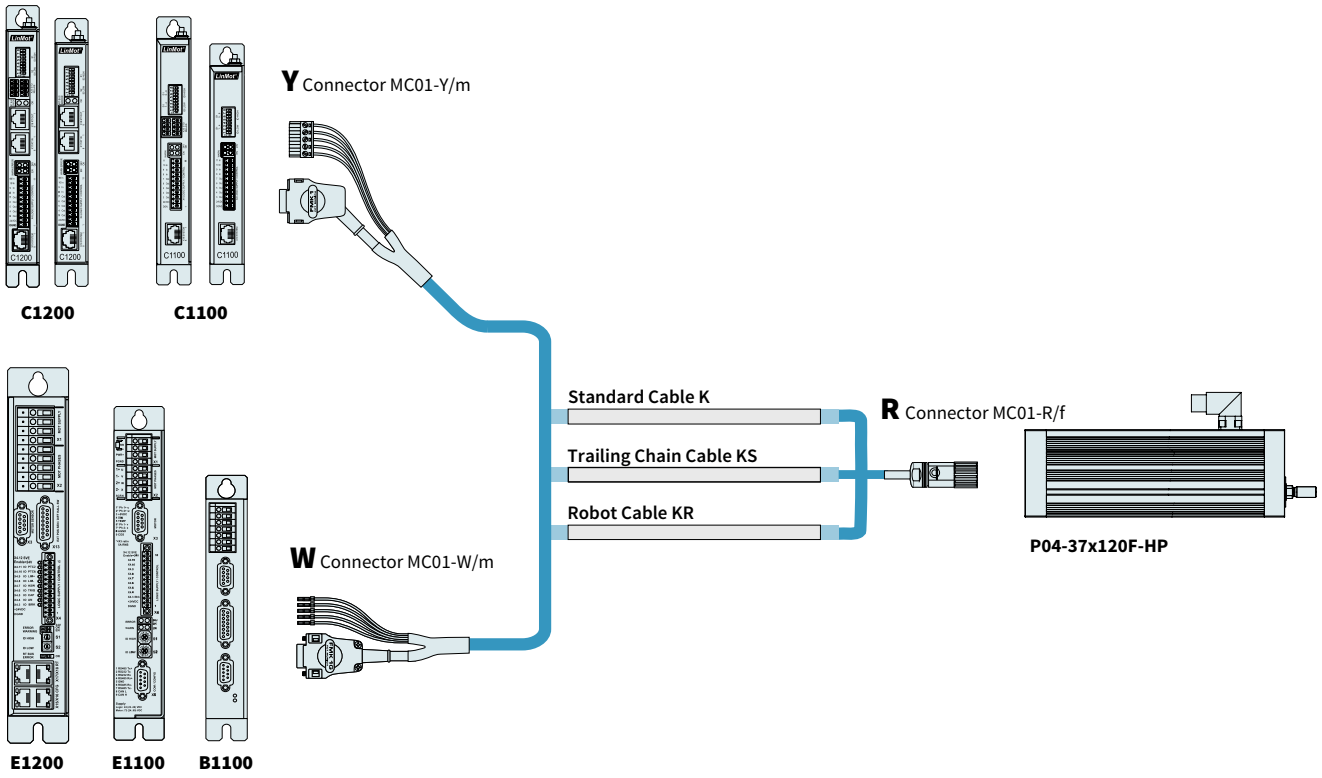

ORDERING INFORMATION

STANDARDKABEL		
Item	**Description**	**Item-No.**
K05-W/R-2	Motor Cable W/R, 2 m	0150-2119
K05-W/R-4	Motor Cable W/R, 4 m	0150-2120
K05-W/R-6	Motor Cable W/R, 6 m	0150-2121
K05-W/R-8	Motor Cable W/R, 8 m	0150-2122
K05-W/R-	Motor Cable W/R, Custom length	0150-3262
K05-Y/R-2	Motor Cable Y/R, 2 m	0150-2421
K05-Y/R-4	Motor Cable Y/R, 4 m	0150-2422
K05-Y/R-6	Motor Cable Y/R, 6 m	0150-2423
K05-Y/R-8	Motor Cable Y/R, 8 m	0150-2424
K05-Y-Fe/R-	Motor Cable Y/R, Custom length	0150-3501

TRAILING CHAIN CABLE		
Item	**Description**	**Item-No.**
KS05-W/R-4	Trailing Chain Cable W/R, 4 m	0150-2106
KS05-W/R-6	Trailing Chain Cable W/R, 6 m	0150-2131
KS05-W/R-8	Trailing Chain Cable W/R, 8 m	0150-2107
KS05-W/R-	Trailing Chain Cable W/R, Custom length	0150-3256
KS05-Y/R-4	Trailing Chain Cable Y/R, 4 m	0150-2433
KS05-Y/R-6	Trailing Chain Cable Y/R, 6 m	0150-2434
KS05-Y/R-8	Trailing Chain Cable Y/R, 8 m	0150-2435
KS05-Y/R-	Trailing Chain Cable Y/R, Custom length	0150-3507

ROBOT CABLE		
Item	**Description**	**Item-No.**
KR05-W/R-	Robot Cable KR05-W/R, Custom length	0150-3336
KR05-Y-Fe/R-	Robot Cable KR05-Y-Fe/R, Custom length	0150-3512

CONNECTOR & CABLE (INDIVIDUAL)		
Item	**Description**	**Item-No.**
MC01-W/m	Motor Connector W/m	0150-3140
MC01-Y-Fe/m	Motor Connector Y-Fe/m	0150-3289
MC01-R/f	Motor Connector R/f	0150-3129
K05-04/05	Motor Cable per m	0150-1920
KS05-04/05	Trailing Chain Cable per m	0150-1938
KR05-04/05	Robot Cable per m	0150-1846

LINEAR MOTORS P04-48x240F



- Peak force up to 570 N
- Stroke up to 150 mm
- Hardened rod capable to handle side load
- Mounting connection according to ISO pneumatic cylinder
- Stator encapsulated (IP65)
- Ideal for use in harsh environments

P04-48x240F/100-C

Max. Stroke: 100 mm
Peak Force: 572 N

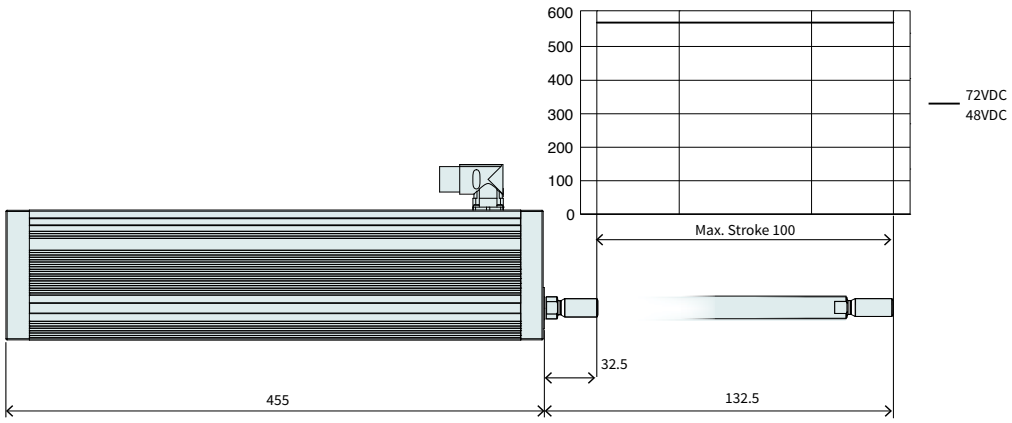

Dimensions in mm

Technical Data P04-48x240F/100				
Stroke				
Max. Stroke	mm	(in)	100	(3.93)
Force				
Max. Force @ 48VDC	N	(lbf)	572	(129)
Max. Force @ 72VDC	N	(lbf)	572	(129)
Max. Cont. Force [Passive cooling/ Fan / Fluid]	N	(lbf)	190 / 250 / -	(42 / 56 / -)
Force Constant	N/A_{pk}	(lbf/A_{pk})	22	(4.95)
Velocity				
Max. Velocity @ 48VDC	m/s	(in/s)	1.9	(78.9)
Max. Velocity @ 72VDC	m/s	(in/s)	2.9	(119.9)
Position Detection				
Position Resolution	mm	(in)	0.007	(0.0003)
Repeatability	mm	(in)	±0.05	(±0.002)
Linearity	%		± 0.4	
Electrical Data				
Max. Current @ 48VDC	A_{pk}		25.9	
Max. Current @ 72VDC	A_{pk}		25.9	
Max. Cont. Current [Passive cooling /Fan / Fluid]	A_{pk}		8.6 / 11/ -	
Terminal Resistance 25 °C / 120 °C	Ohm		0.97 / 1.3	
Terminal Inductivity	mH		1.1	
Magnetic Period	mm	(in)	60	(2.35)
Thermal Data				
Max. Winding Temperature (Sensor)	°C		90	
Thermal Resistance [Passive cooling / Fan / Fluid]	°K/W		0.54 / 0.31 / -	
Thermal Time Constant [Passive cooling / Fan / Fluid]	s		550 / 320 / -	
Mechanical Data				
Stator Width	mm	(in)	54	(2.13)
Stator Height	mm	(in)	110	(4.33)
Stator Length	mm	(in)	455	(17.92)
Stator Mass	g	(lb)	3555	(7.82)
Rod Diameter	mm	(in)	20	(0.79)
Rod Mass	g	(lb)	1109	(2.45)
Max. shear force to the rod	N	(lbf)	90	(20.25)
Max. torque to the rod	Nm	(lbfin)	2.5	(22.32)
IP Code			IP 65	

MOTOR

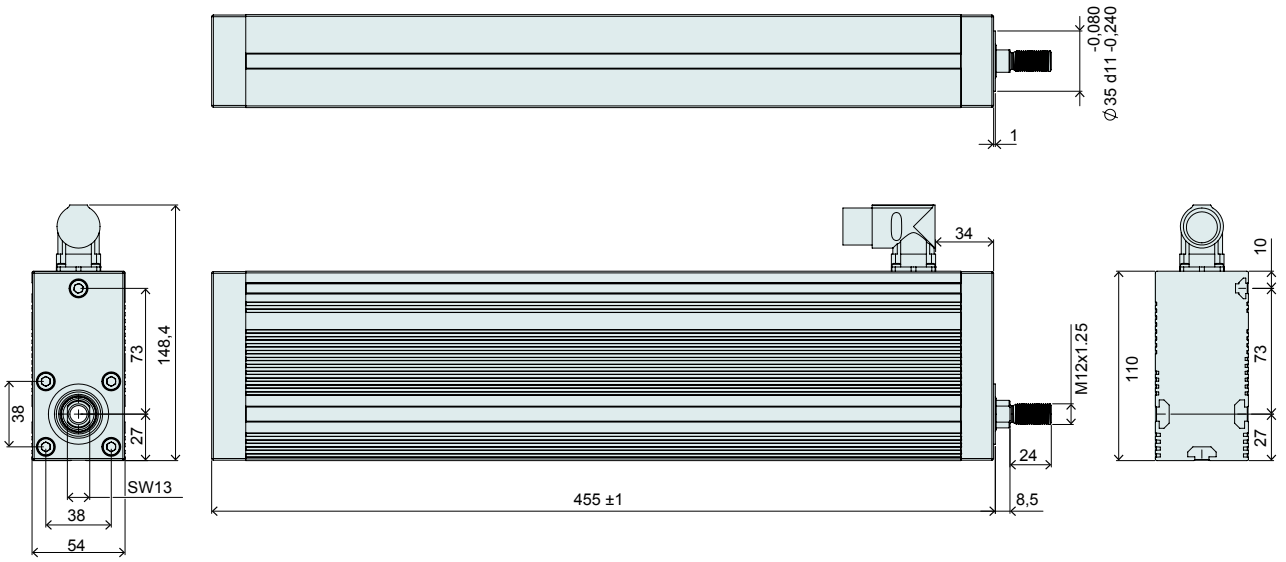

Item	Description	Item-No.
P04-48x240F/100-C	Linear motor P04-48, 100 mm Stroke	0150-2757

CONNECTOR

Motor Connector Wiring	C-Connector	Wire Color Motor Cable
Ph 1+	A	red
Ph 1-	B	pink
Ph 2+	C	blue
Ph 2-	D	grey
+5VDC	E	white
GND	F	Inner Shield
Sinus	G	yellow
Cosinus	H	green
Temp.	L	black
Shield	Gehäuse	Outer Shield

C-Connector

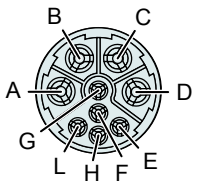

View: Motor connector, plug on

P04-48x240F/150-C

Max. Stroke: 150 mm
Peak Force: 572 N

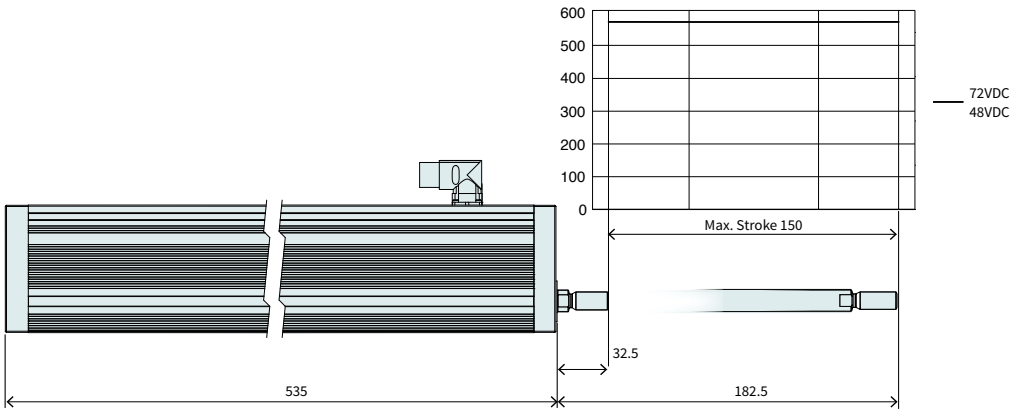

Dimensions in mm

Technical Data P04-48x240F/150				
Stroke				
Max. Stroke	mm	(in)	150	(5.91)
Force				
Max. Force @ 48VDC	N	(lbf)	572	(129)
Max. Force @ 72VDC	N	(lbf)	572	(129)
Max. Cont. Force [Passive cooling/ Fan / Fluid]	N	(lbf)	190 / 250 / -	(42 / 56 / -)
Force Constant	N/A_{pk}	(lbf/A_{pk})	22	(4.95)
Velocity				
Max. Velocity @ 48VDC	m/s	(in/s)	1.9	(78.9)
Max. Velocity @ 72VDC	m/s	(in/s)	2.9	(119.9)
Position Detection				
Position Resolution	mm	(in)	0.007	(0.0003)
Repeatability	mm	(in)	±0.05	(±0.002)
Linearity	%		± 0.4	
Electrical Data				
Max. Current @ 48VDC	A_{pk}		25.9	
Max. Current @ 72VDC	A_{pk}		25.9	
Max. Cont. Current [Passive cooling /Fan / Fluid]	A_{pk}		8.6 / 11/ -	
Terminal Resistance 25 °C / 120 °C	Ohm		0.97 / 1.3	
Terminal Inductivity	mH		1.1	
Magnetic Period	mm	(in)	60	(2.35)
Thermal Data				
Max. Winding Temperature (Sensor)	°C		90	
Thermal Resistance [Passive cooling / Fan / Fluid]	°K/W		0.54 / 0.31 / -	
Thermal Time Constant [Passive cooling / Fan / Fluid]	s		550 / 320 / -	
Mechanical Data				
Stator Width	mm	(in)		
Stator Height	mm	(in)		
Stator Length	mm	(in)		
Stator Mass	g	(lb)	3865	(6.9)
Rod Diameter	mm	(in)		
Rod Mass	g	(lb)		
Max. shear force to the rod	N	(lbf)		
Max. torque to the rod	Nm	(lbfin)		
IP Code			IP 65	

MOTOR

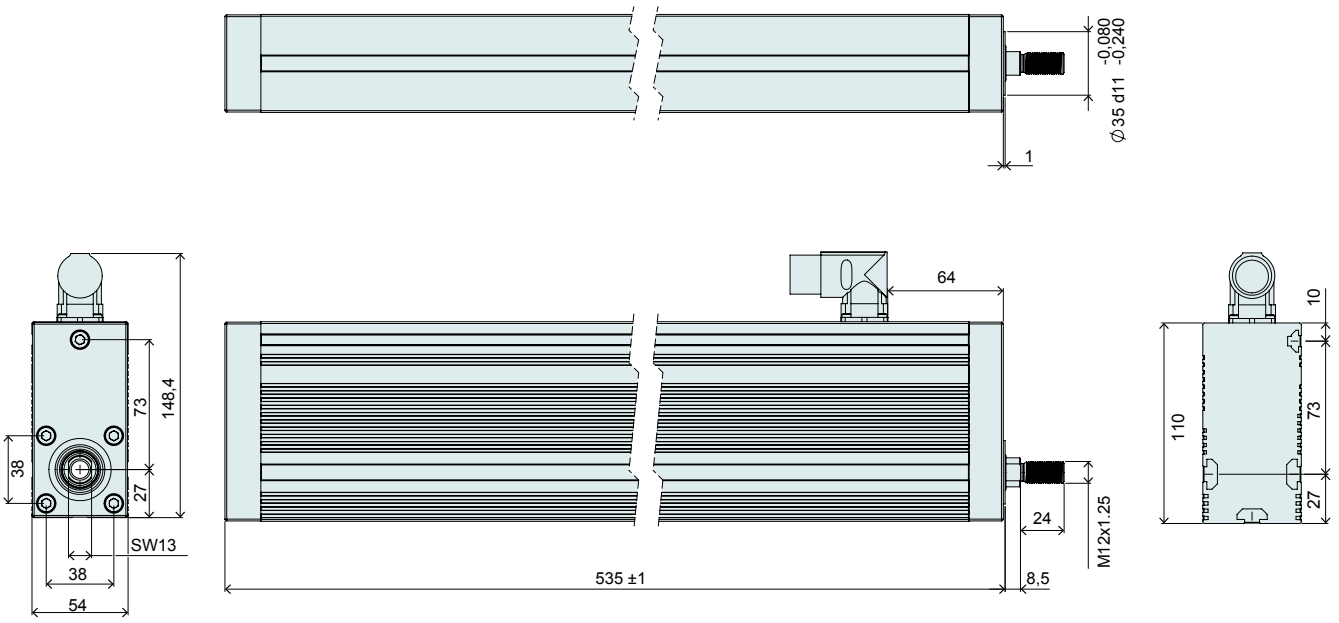

Item	Description	Item-No.
P04-48x240F/150-C	Linear motor P04-48, 150 mm Stroke	0150-2745

CONNECTOR

Motor Connector Wiring	C-Connector	Wire Color Motor Cable
Ph 1+	A	red
Ph 1-	B	pink
Ph 2+	C	blue
Ph 2-	D	grey
+5VDC	E	white
GND	F	Inner Shield
Sinus	G	yellow
Cosinus	H	green
Temp.	L	black
Shield	Gehäuse	Outer Shield

C-Connector

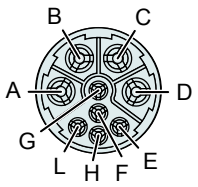

View: Motor connector, plug on

Motor Cable

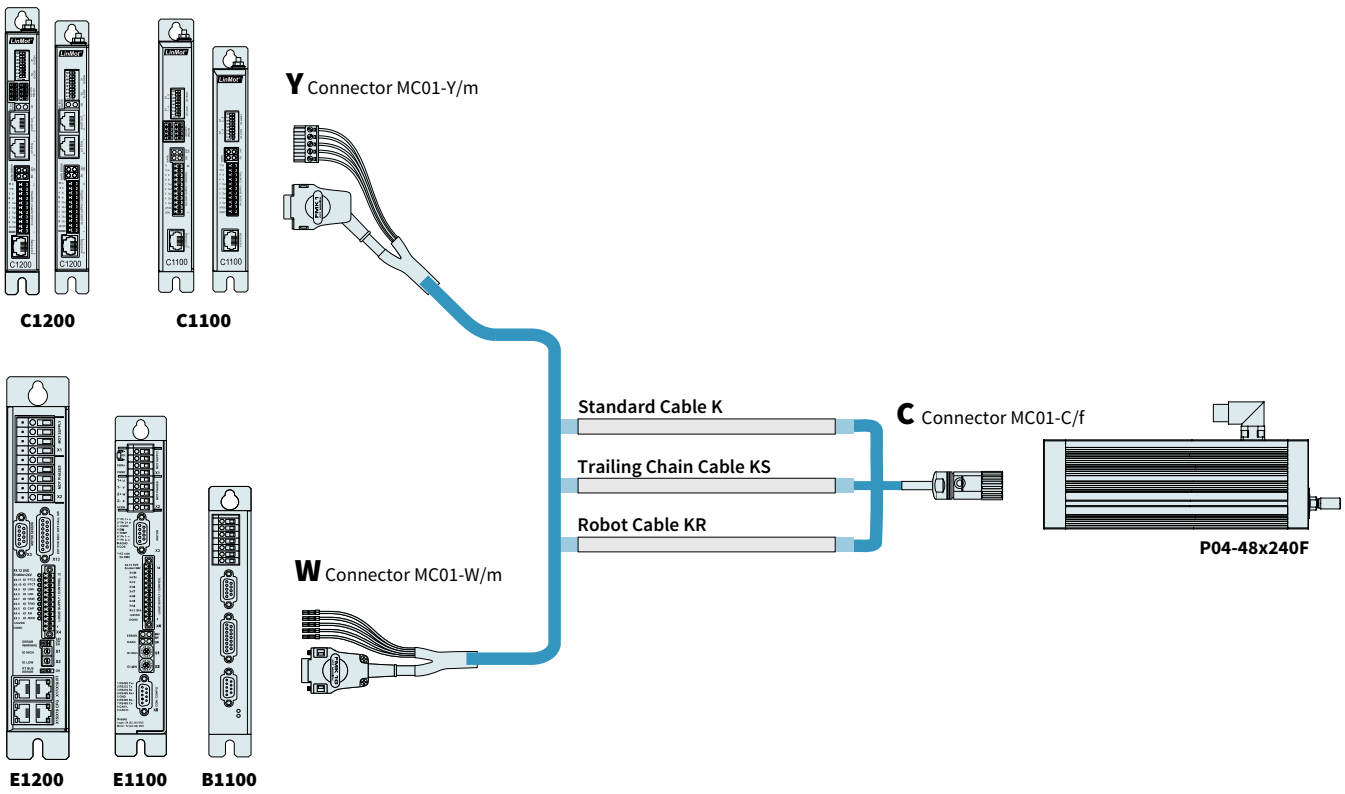

ORDERING INFORMATION

STANDARDKABEL		
Item	**Description**	**Item-No.**
K15-W/C-2	Motor Cable W/C, 2 m	0150-1811
K15-W/C-4	Motor Cable W/C, 4 m	0150-1801
K15-W/C-6	Motor Cable WC, 6 m	0150-1802
K15-W/C-8	Motor Cable W/C, 8 m	0150-1803
K15-W/C-	Motor Cable W/C, Custom length	0150-3131
K15-Y/C-2	Motor Cable Y/C, 2 m	0150-2429
K15-Y/C-4	Motor Cable Y/C, 4 m	0150-2430
K15-Y/C-6	Motor Cable Y/C, 6 m	0150-2431
K15-Y/C-8	Motor Cable Y/C, 8 m	0150-2432
K15-Y/C-	Motor Cable Y/C, Custom length	0150-3506

TRAILING CHAIN CABLE		
Item	**Description**	**Item-No.**
KS10-W/C-4	Trailing Chain Cable W/C, 4 m	0150-1807
KS10-W/C-6	Trailing Chain Cable W/C, 6 m	0150-1858
KS10-W/C-8	Trailing Chain Cable W/C, 8 m	0150-1808
KS10-W/C-	Trailing Chain Cable W/C, Custom length	0150-3139
KS10-Y/C-4	Trailing Chain Cable Y/C, 4 m	0150-2439
KS10-Y/C-6	Trailing Chain Cable Y/C, 6 m	0150-2440
KS10-Y/C-8	Trailing Chain Cable Y/C, 8 m	0150-2441
KS10-Y/C-	Trailing Chain Cable Y/C, Custom length	0150-3511

ROBOT CABLE		
Item	**Description**	**Item-No.**
KR10-W/C-	Robot Cable KR10-W/C, Custom length	0150-3199
KR10-Y-Fe/C-	Robot Cable KR10-Y-Fe/C, Custom length	0150-3515

CONNECTOR & CABLE (INDIVIDUAL)		
Item	**Description**	**Item-No.**
MC01-W/m	Motor Connector W/m	0150-3140
MC01-Y-Fe/m	Motor Connector Y-Fe/m	0150-3289
MC01-C/f	Motor Connector C/f	0150-3080
K15-04/05	Motor Cable per m	0150-1978
KS10-04/05	Trailing Chain Cable per m	0150-1977
KR10-04/05	Robot Cable per m	0150-1830

LINEAR MOTORS PD04



The motor to replace pneumatics.

Product Description

The P04 linear motor has all of the features of the tubular linear motors and has the additional advantage of an integrated guidance. Under the compact aluminum housing is a powerful LinMot PS01-37x120F or PS01-48x240F that drives the precision shaft on bearings. The shaft is guided by a linear ball bearing and has a maximum stroke of 150 mm. With the M10x1.25 thread on the front end, loads can be quickly and easily attached to the shaft. Additional installation options are provided by the profile grooves and T-slots found on every side of the housing.

The ability to move to any position and accelerate up to 50 m/s² means that precision dynamic motions can be implemented for a broad range of applications.



Programmable without a PC

The PD04 linear drive is very easy to use. It can be used to replace pneumatic cylinders and configured with no software or PC required. Motion data and force data can be set from a display directly on the drive in real time. The user can set up four positions easily. There is no need for a reference run, as the drive uses an absolute sensor system. The motor is ready to go as soon as it is connected and starts positioning immediately.

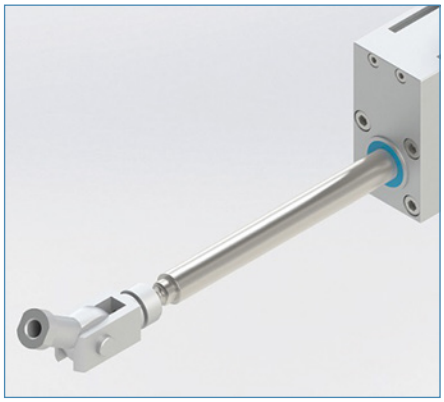



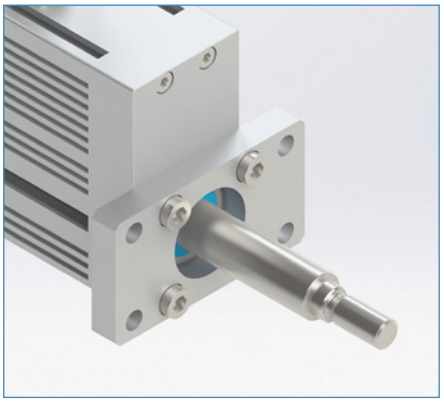

Can be equipped with mechanical accessories for pneumatic systems

The P04 actuator can be equipped with familiar mechanical accessories for pneumatic systems. Several design details on the motor make this possible. The load end of rod has a thread that is identical to ISO 15552 pneumatic cylinders. All mounting elements for pneumatics can be used accordingly. This particularly includes swivel heads and clevis mounts. The PD04 linear motor itself can be mounted like a pneumatic cylinder or by using the T-slots in the housing. All known pivoting and stationary mounting flanges can be used.

HARDENED SHAFT FOR TRANSVERSE LOADS

The integrated bearing of the PD04 linear motor provides a substantial benefit. The transverse loads that are applied in special applications can be supported.

Simple applications such as ejectors can be implemented in the simplest manner without additional components.

HIGH AND CONTROLLED DYNAMICS

Max. acceleration values over 50 m/s² and travel speeds over 3 m/s allow cyclical motion sequences of several Hertz.

For handling applications with sensitive products, smooth motions with suitable accelerations can be obtained.

FREELY POSITIONABLE

LinMot linear motors can be freely positioned. With absolute or relative movement commands, they can move to any desired position in the stroke range. Since the LinMot linear drive system is a closed-loop system, not only the end positions are monitored, but also deviations in position during travel. This allows, among other things, precise specification of travel speeds, acceleration and braking ramps, and travel through curved paths.

PROCESS STABILITY

For temperature monitoring, all linear motors are equipped with sensors, which transmit the data to the drive. The data can be evaluated in the higher-level control in such a way that the motor can be kept in a constant temperature range.

Since not only the end positions, but also speed and acceleration are controlled and monitored, motions that are programmed once are carried out the same way over the entire life of the machine.

OVERLOAD PROTECTION

There are no mechanical components for force transfer that could be damaged in a crash or stall condition in a linear motor. Complex, expensive designs to protect gearboxes, gears, and shafts are thus eliminated. If the linear motor stalls, it acts like a pneumatic cylinder and tries to reach the target position with defined maximum force. The following error monitor in the drive can, however, immediately recognize a stall condition. Temperature sensors integrated in the stator prevent the drive from overloading in any case.

LONG LIFESPAN

Since the linear motion is generated purely magnetically, and no mechanical force transmission takes place, even extremely dynamic applications can be implemented with a long lifespan.

Type Code

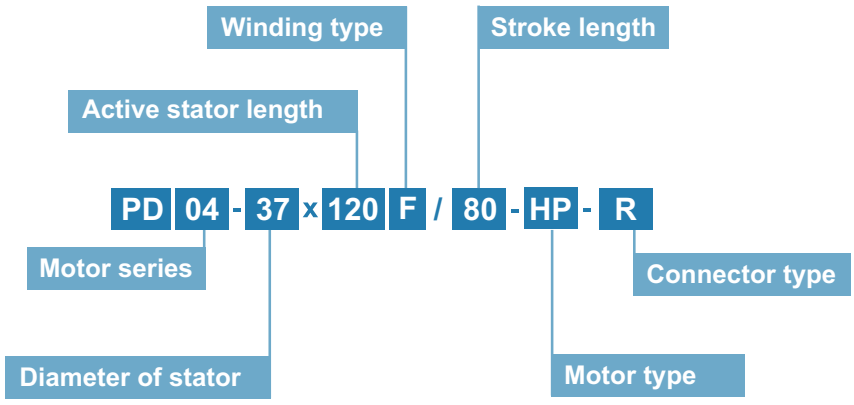

Diameter of the stator which is built into the housing.

For explanations of the terms, please refer to the section "Glossary"

LINEAR MOTORS PD04-37x120F-HP



- Linear Motor with integrated Drive
- Integrated linear guide
- Quick and easy commissioning
- Stand alone configuration of the motor
- Highly dynamic
- Absolute sensor, no homing required
- Freely programmable positions
- "In position" signal for each position

PD04-37x120F/80-HP-R

Max. Stroke: 80 mm
Peak Force: 255 N

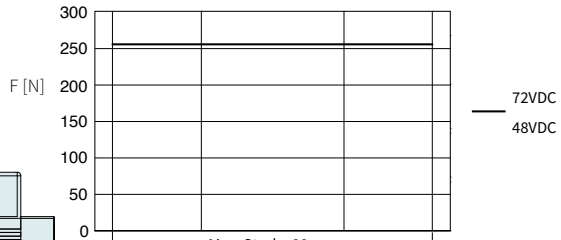

Dimensions in mm

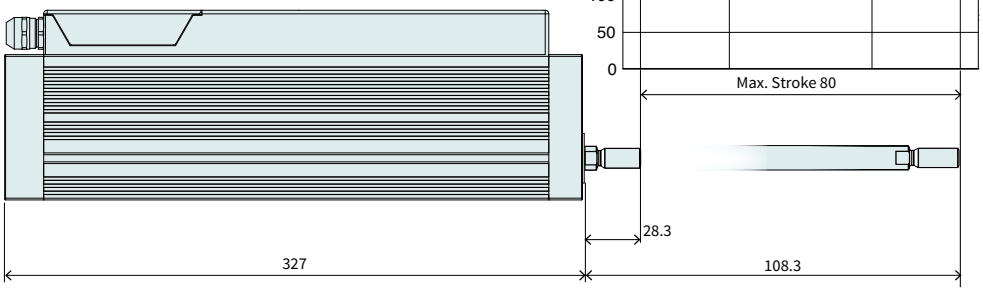

Technical Data PD04-37x120F/80-HP-R				
Stroke				
Max. Stroke	mm	(in)	80	(3.14)
Force				
Max. Force @ 48VDC	N	(lbf)	255	(57.3)
Max. Force @ 72VDC	N	(lbf)	255	(57.3)
Max. Cont. Force [Passive cooling/ Fan / Fluid]	N	(lbf)	63 / 93 / -	(14 / 21 / -)
Force Constant	N/A_{pk}	(lbf/A_{pk})	17	(3.82)
Velocity				
Max. Velocity @ 48VDC	m/s	(in/s)	2.5	(99.9)
Max. Velocity @ 72VDC	m/s	(in/s)	3.8	(149.9)
Position Detection				
Position Resolution	mm	(in)	0.005	(0.0002)
Repeatability	mm	(in)	±0.05	(±0.002)
Linearity	%		± 0.4	
Electrical Data				
Max. Current @ 48VDC	A_{pk}		14.9	
Max. Current @ 72VDC	A_{pk}		14.9	
Max. Cont. Current [Passive cooling /Fan / Fluid]	A_{pk}		3.7 / 5.5/ -	
Terminal Resistance 25 °C / 150 °C	Ohm		2.4 / 3.5	
Terminal Inductivity	mH		1.6	
Magnetic Period	mm	(in)	40	(1.57)
Thermal Data				
Max. Winding Temperature (Sensor)	°C		120	
Thermal Resistance [Passive cooling / Fan / Fluid]	°K/W		1.7 / 0.78 / -	
Thermal Time Constant [Passive cooling / Fan / Fluid]	s		680 / 310 / -	
Mechanical Data				
Stator Width	mm	(in)	45	(1.77)
Stator Height	mm	(in)	82	(3.23)
Stator Length	mm	(in)	327	(12.88)
Stator Mass	g	(lb)	2365	(5.2)
Rod Diameter	mm	(in)	16	(0.63)
Rod Mass	g	(lb)	507	(1.12)
Max. shear force to the rod	N	(lbf)	60	(13.5)
Max. torque to the rod	Nm	(lbfin)	1	(8.93)
IP Code			IP 65	

MOTOR

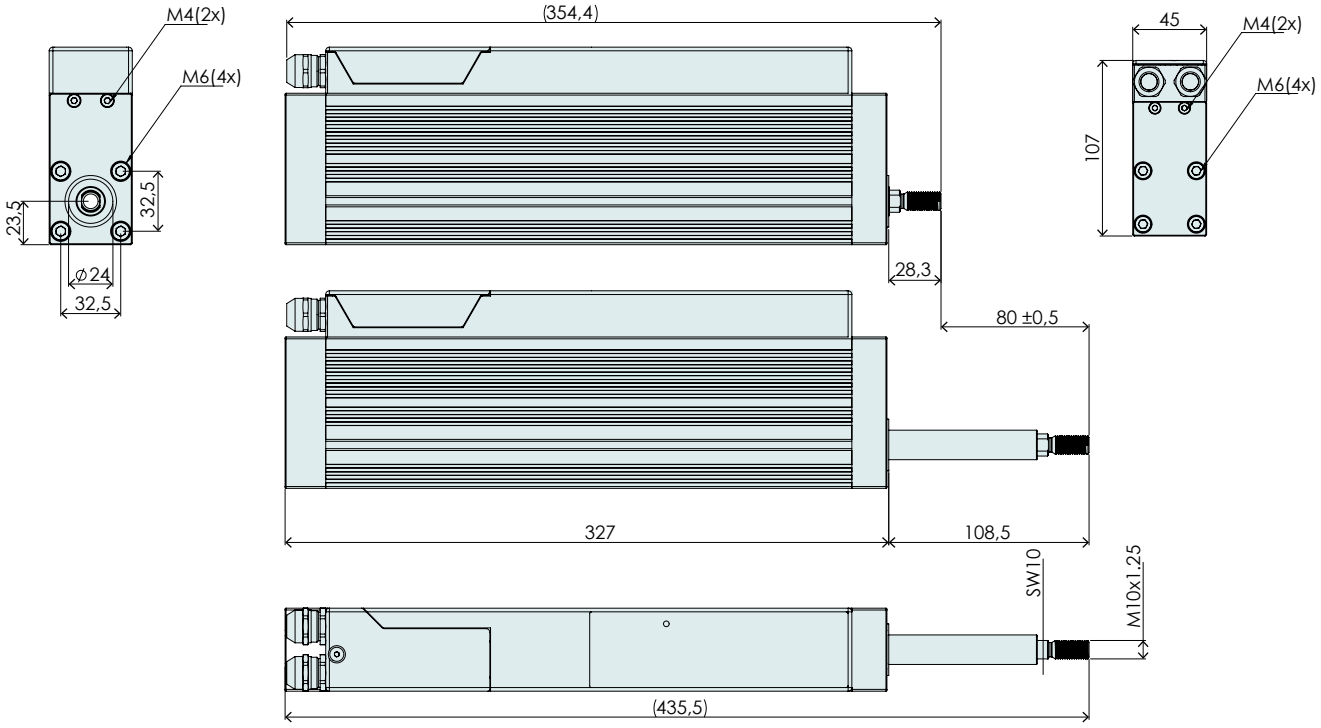

Item	Description	Item-No.
PD04-37x120F/80-HP	Linear motor PD04-37, 80 mm Stroke	0150-2792

PD04-37x120F/135-HP-R

Max. Stroke: 135 mm
Peak Force: 255 N

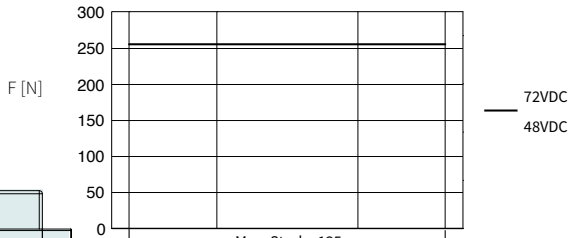

Dimensions in mm

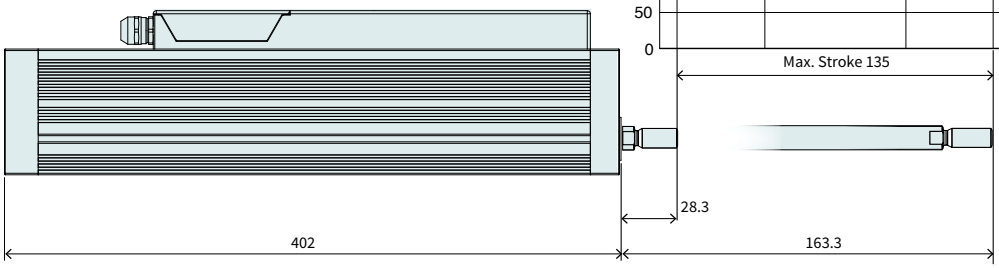

Technical Data PD04-37x120F/135-HP-R				
Stroke				
Max. Stroke	mm	(in)	135	(5.3)
Force				
Max. Force @ 48VDC	N	(lbf)	255	(57.3)
Max. Force @ 72VDC	N	(lbf)	255	(57.3)
Max. Cont. Force [Passive cooling/ Fan / Fluid]	N	(lbf)	63 / 93 / -	(14 / 21 / -)
Force Constant	N/A_{pk}	(lbf/A_{pk})	17	(3.82)
Velocity				
Max. Velocity @ 48VDC	m/s	(in/s)	2.5	(99.9)
Max. Velocity @ 72VDC	m/s	(in/s)	3.8	(149.9)
Position Detection				
Position Resolution	mm	(in)	0.005	(0.0002)
Repeatability	mm	(in)	±0.05	(±0.002)
Linearity	%		± 0.4	
Electrical Data				
Max. Current @ 48VDC	A_{pk} / A_{rms}		14.9	
Max. Current @ 72VDC	A_{pk} / A_{rms}		14.9	
Max. Cont. Current [Passive cooling /Fan / Fluid]	A_{pk}		3.7 / 5.5/ -	
Terminal Resistance 25 °C / 150 °C	Ohm		2.4 / 3.5	
Terminal Inductivity	mH		1.6	
Magnetic Period	mm	(in)	40	(1.57)
Thermal Data				
Max. Winding Temperature (Sensor)	°C		120	
Thermal Resistance [Passive cooling / Fan / Fluid]	°K/W		1.7 / 0.78 / -	
Thermal Time Constant [Passive cooling / Fan / Fluid]	s		680 / 310 / -	
Mechanical Data				
Stator Width	mm	(in)	45	(1.77)
Stator Height	mm	(in)	82	(3.23)
Stator Length	mm	(in)	402	(15.83)
Stator Mass	g	(lb)	2675	(5.89)
Rod Diameter	mm	(in)	16	(0.63)
Rod Mass	g	(lb)	625	(1.38)
Max. shear force to the rod	N	(lbf)	60	(13.5)
Max. torque to the rod	Nm	(lbfin)	1	(8.93)
IP Code			IP 65	

MOTOR

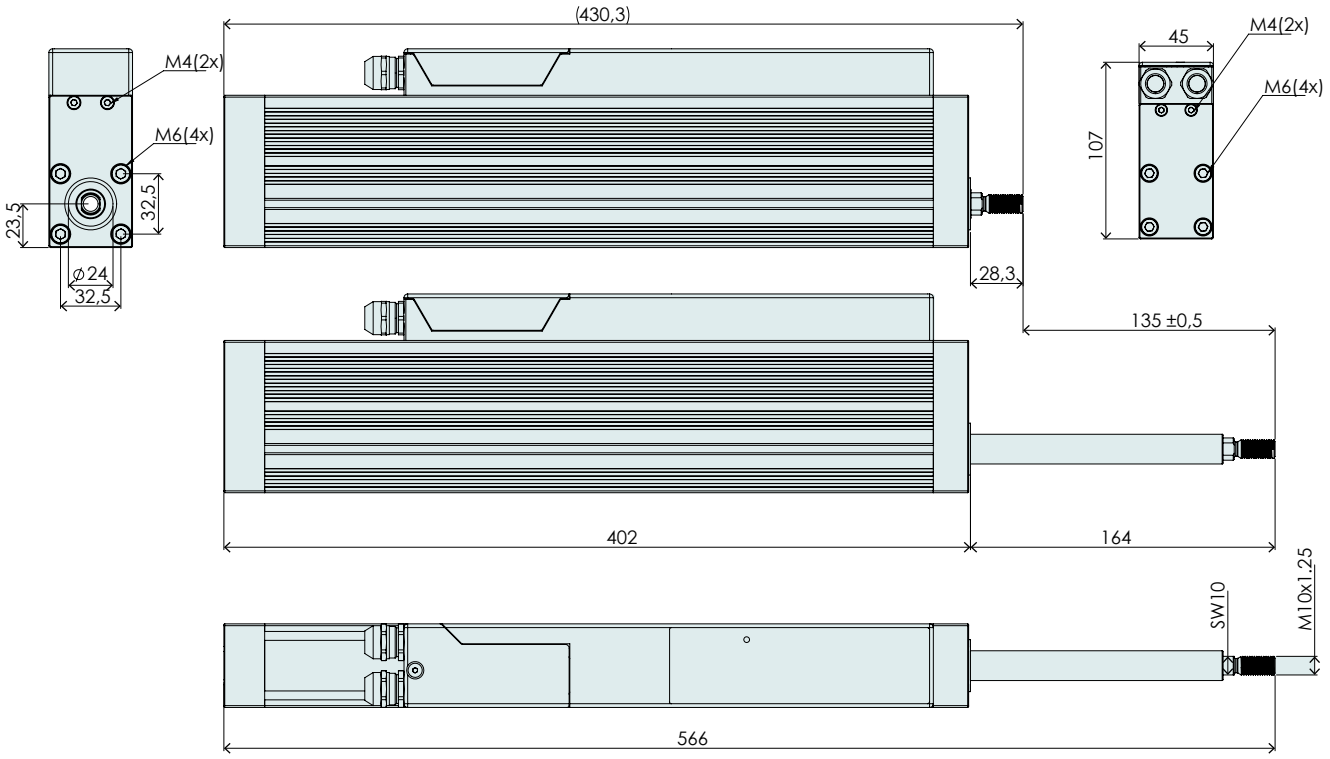

Item	Description	Item-No.
PD04-37x120F/135-HP	Linear motor PD04-37, 135 mm Stroke	0150-2793

LINEAR MOTORS PD04-48x240F



- Linear Motor with integrated Drive
- Integrated linear guide
- Quick and easy commissioning
- Stand alone configuration of the motor
- Highly dynamic
- Absolute sensor, no homing required
- Freely programmable positions
- "In position" signal for each position

PD04-48x240F/100-C

Max. Stroke: 100 mm
Peak Force: 572 N

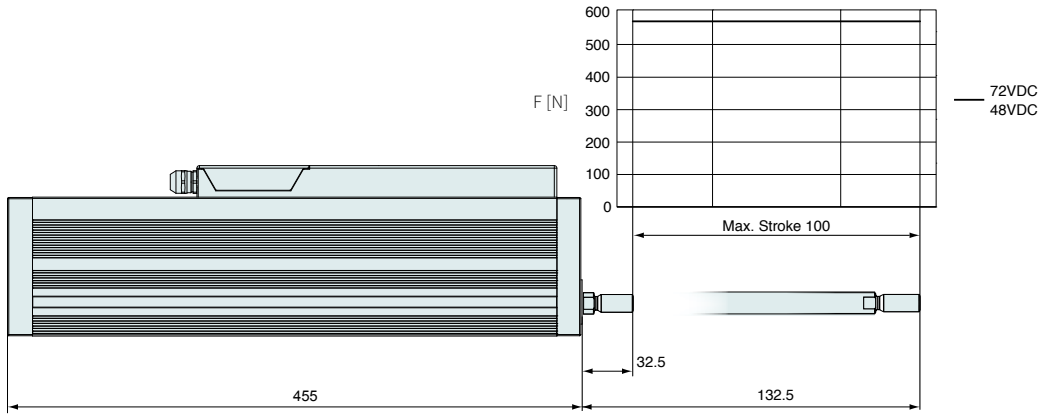

Dimensions in mm

Technical Data PD04-48x240F/100-C				
Stroke				
Max. Stroke	mm	(in)	100	(3.93)
Force				
Max. Force @ 48VDC	N	(lbf)	572	(129)
Max. Force @ 72VDC	N	(lbf)	572	(129)
Max. Cont. Force [Passive cooling/ Fan / Fluid]	N	(lbf)	190 / 250 / -	(42 / 56 / -)
Force Constant	N/A_{pk}	(lbf/A_{pk})	22	(4.95)
Velocity				
Max. Velocity @ 48VDC	m/s	(in/s)	1.9	(78.9)
Max. Velocity @ 72VDC	m/s	(in/s)	2.9	(119.9)
Position Detection				
Position Resolution	mm	(in)	0.007	(0.0003)
Repeatability	mm	(in)	±0.05	(±0.002)
Linearity	%		± 0.4	
Electrical Data				
Max. Current @ 48VDC	A_{pk} / A_{rms}		25.9	
Max. Current @ 72VDC	A_{pk} / A_{rms}		25.9	
Max. Cont. Current [Passive cooling /Fan / Fluid]	A_{pk}		8.6 / 11/ -	
Terminal Resistance 25 °C / 120 °C	Ohm		0.97 / 1.3	
Terminal Inductivity	mH		1.1	
Magnetic Period	mm	(in)	60	(2.35)
Thermal Data				
Max. Winding Temperature (Sensor)	°C		90	
Thermal Resistance [Passive cooling / Fan / Fluid]	°K/W		0.54 / 0.31 / -	
Thermal Time Constant [Passive cooling / Fan / Fluid]	s		550 / 320 / -	
Mechanical Data				
Stator Width	mm	(in)	54	(2.13)
Stator Height	mm	(in)	110	(4.33)
Stator Length	mm	(in)	455	(17.92)
Stator Mass	g	(lb)	3555	(7.82)
Rod Diameter	mm	(in)	20	(0.79)
Rod Mass	g	(lb)	1109	(2.45)
Max. shear force to the rod	N	(lbf)	90	(20.25)
Max. torque to the rod	Nm	(lbfin)	2.5	(22.32)
IP Code			IP 65	

MOTOR

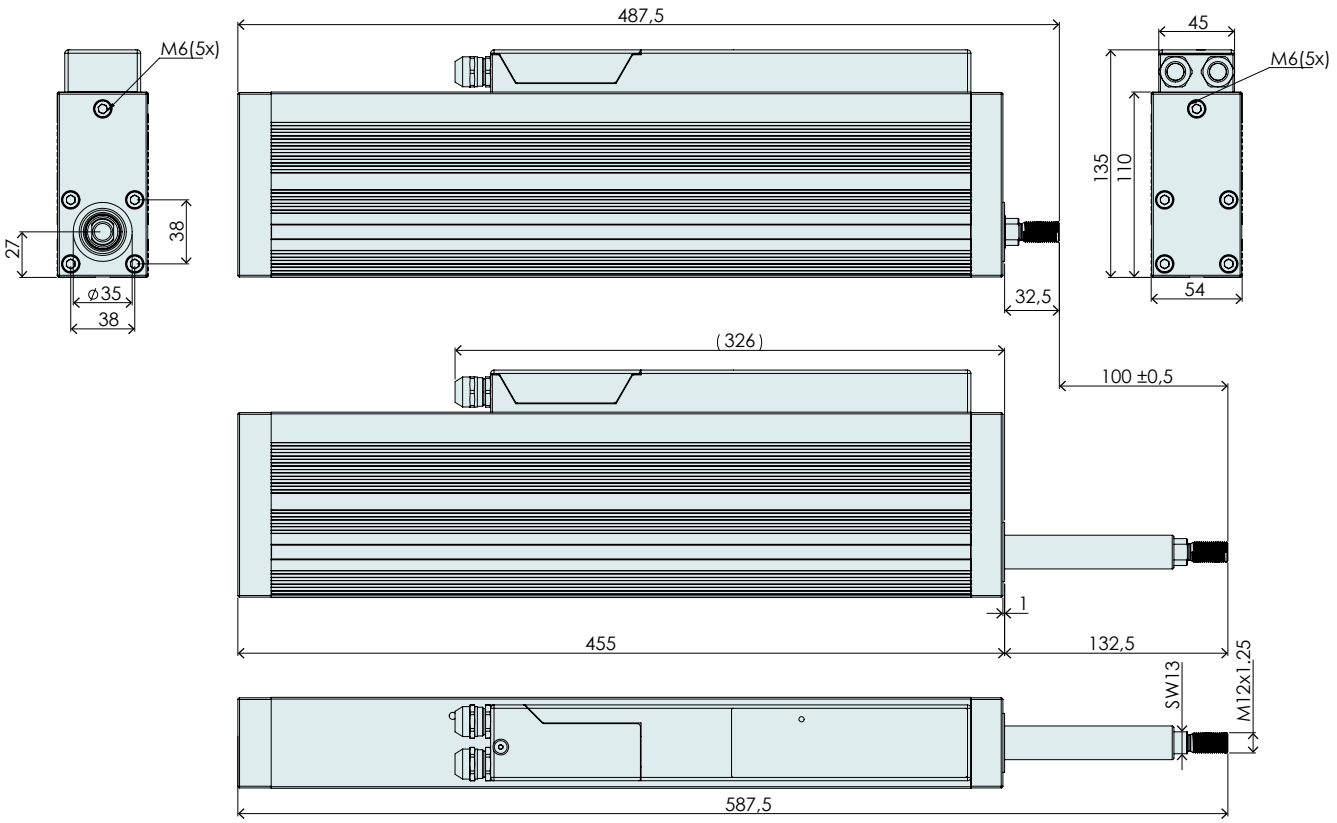

Item	Description	Item-No.
PD04-48x240F/100	Linear motor PD04-48, 100 mm Stroke	0150-2794

PD04-48x240F/150-C

Max. Stroke: 150 mm
Peak Force: 572 N

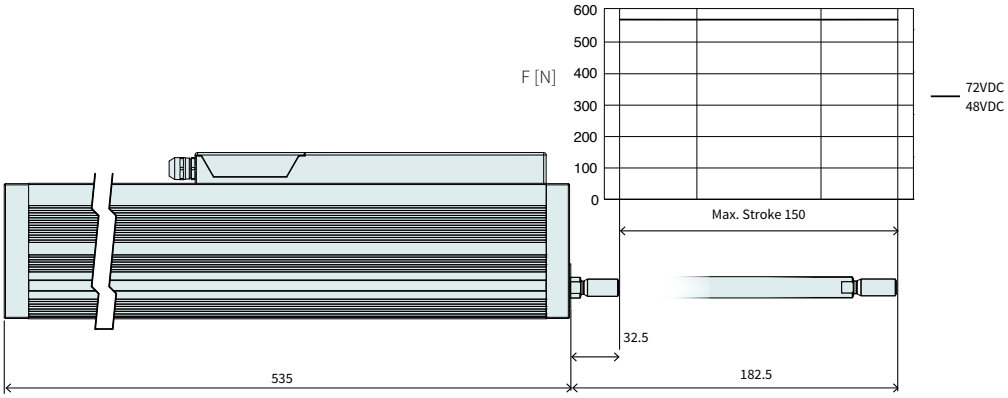

Dimensions in mm

Technical Data PD04-48x240F/150-C				
Stroke				
Max. Stroke	mm	(in)	150	(5.91)
Force				
Max. Force @ 48VDC	N	(lbf)	572	(129)
Max. Force @ 72VDC	N	(lbf)	572	(129)
Max. Cont. Force [Passive cooling/ Fan / Fluid]	N	(lbf)	190 / 250 / -	(42 / 56 / -)
Force Constant	N/A_{pk}	(lbf/A_{pk})	22	(4.95)
Velocity				
Max. Velocity @ 48VDC	m/s	(in/s)	1.9	(78.9)
Max. Velocity @ 72VDC	m/s	(in/s)	2.9	(119.9)
Position Detection				
Position Resolution	mm	(in)	0.007	(0.0003)
Repeatability	mm	(in)	±0.05	(±0.002)
Linearity	%		± 0.4	
Electrical Data				
Max. Current @ 48VDC	A_{pk}		25.9	
Max. Current @ 72VDC	A_{pk}		25.9	
Max. Cont. Current [Passive cooling /Fan / Fluid]	A_{pk}		8.6 / 11/ -	
Terminal Resistance 25 °C / 120 °C	Ohm		0.97 / 1.3	
Terminal Inductivity	mH		1.1	
Magnetic Period	mm	(in)	60	(2.35)
Thermal Data				
Max. Winding Temperature (Sensor)	°C		90	
Thermal Resistance [Passive cooling / Fan / Fluid]	°K/W		0.54 / 0.31 / -	
Thermal Time Constant [Passive cooling / Fan / Fluid]	s		550 / 320 / -	
Mechanical Data				
Stator Width	mm	(in)	54	(2.13)
Stator Height	mm	(in)	110	(4.33)
Stator Length	mm	(in)	535	(21.07)
Stator Mass	g	(lb)	3865	(8.5)
Rod Diameter	mm	(in)	20	(0.79)
Rod Mass	g	(lb)	1305	(2.88)
Max. shear force to the rod	N	(lbf)	90	(20.25)
Max. torque to the rod	Nm	(lbfin)	2.5	(22.32)
IP Code			IP 65	

MOTOR

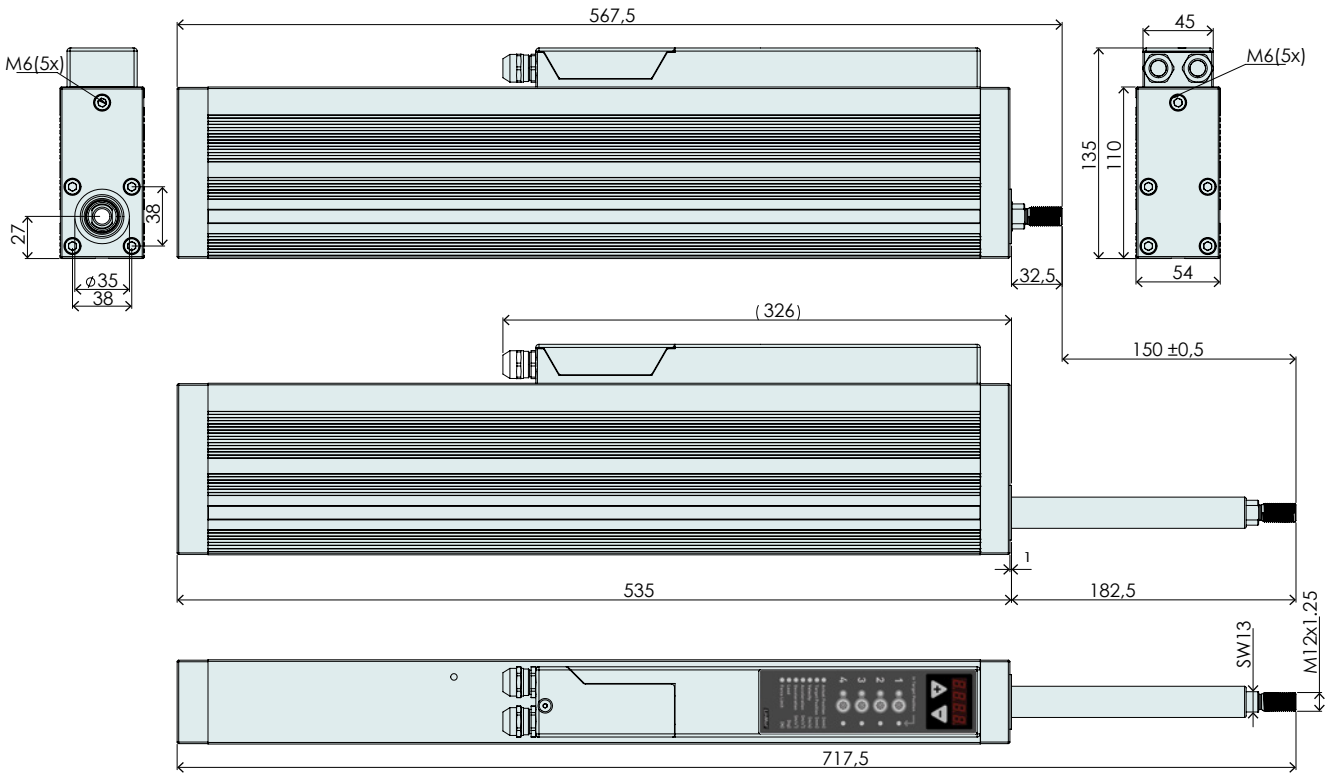

Item	Description	Item-No.
PD04-48x240F/150	Linear motor PD04-48, 150 mm Stroke	0150-2795